2202Q1JE-HO-K-N_2015.06.

MYCOM

Reciprocating Compressor
K-series Instruction Manual
2K/4K/6K/8K

CAUTION

Before operating, inspecting, or servicing the compressor, read this manual thoroughly to fully understand the contents.
Keep this instruction manual in a safe, designated place for future reference whenever the manual is needed.
Specifications of this product and contents of this manual are subject to change without prior notice due to technical improvements.

MYCOM MAYEKAWA MFG. CO., LTD.
3-14-15 Botan Koto-ku, Tokyo 135-8482, Japan

Preface

Thank you for purchasing the MYCOM K-series reciprocating compressor (hereafter referred to as "this product") of MAYEKAWA Mfg. Co., Ltd. (hereafter referred to as "MAYEKAWA" or "Company").

Since the initial production and sales launch in 1955 of the first multi-cylinder high speed compressor, MAYEKAWA has subsequently produced a number of series reciprocating compressor products including the Type A, B, J, C, SF, K, WA, WB, L, and M products.

The K- series are available, filling the capacity gap between the C and A-series of compressors. The special design of the K-series allows direct coupling with 4-pole motor, diesel engine making it ideal for applications requiring small size, light weight and high speed.

Two specifications have been newly added to K-series: One has flange motor specifications which is a motor mounted type and is more space-saving taking advantage of small type and the other has a semi-hermetic specifications for ammonia refrigerant which mounts the newly developed semi-hermetic motor with the aim of zero ammonia leakage from the compressor.

This instruction manual (hereafter referred to as "this manual") provides safety information, operating procedures and maintenance procedures for the K-series for the user to be able to sufficiently understand the correct methods of handling this product, in order to safely and effectively use this product. This manual is applicable to the following type products:

2K, 4K, 6K, 8K

The handling manuals for 12K, 62K and the semi-hermetic motor driven type K-series are provided separately with dedicated manuals. If necessary, refer to them with this manual.

Please be sure to read this manual carefully before installing or using this product.

Also, please keep this manual at a convenient place near this product installation to ensure that it can be quickly referred to should any unclear issues arise.

Revision History

Title of Instruction Manual		Document No.	Date of Initial Issue
K-Series Instruction Manual		**2201Q1JE-HO-K-N_2015.02.**	**January 21, 2015**
Rev. No.	**Issue Date**	**Major Revisions**	**Prepared/Approved by**
-	Mar. 01, 1996	Issued to meet the requirements set forth in the Product Liability Law established in July, 1994.	
00	Jan. 21, 2015	Complete revision and reissue as an electronic manual.	Sekine / Muta
01	Feb. 10, 2015	Modified the description of second term in "About this Manual" , and corrected spelling errors in mainly Chapter 7.	Sekine / Muta
02	**June 23, 2015**	**Added the basic packaging points using K-series compressor.**	**Inagaki, Nakata/ Muta**

Warranty and Disclaimer

Warranty

If malfunctions or damages occur under proper usage and conditions following documents such as instruction manual or drawings of this product, or, if MAYEKAWA judges that malfunctions or damages are related to design or manufacture of the product, and if the malfunctions or damages are within the warranty period, we will repair or replace the product without any charges.

The warranty period is "12 months from factory shipment of this product". However, if any separate agreement has been concluded, such an agreement will have the priority in principle.

MAYEKAWA is not liable for production or man made disaster compensation due to malfunction or damage of this product.

Disclaimer of Warranty

Although MAYEKAWA warrants the clauses mentioned above, the following clauses are exempted.

- Malfunction or damage of this product caused by natural disaster, or other accidental forces (such as fire, thunderbolt, windstorm, intense rainfall, flood, tidal wave, earthquake, land subsidence, etc.).
- Malfunction or damage caused by misusage described below.
  - Malfunction, damage, or defect of this product due to abnormal or improper use (such as storing this product for middle to long term outside the building or in locations subject to high temperatures and high humidity, unexpected inspections, tests, operations, and excessive repetition start-up/stoppage of the product.)
  - Malfunction or damage caused by devices or equipments not provided by MAYEKAWA including operation control methods of those devices.
  - Malfunction or damage caused by refrigerants, gases, or refrigerant oils, and operating conditions (design conditions) not approved for this product.
  - Malfunction or damage caused by maintenance or inspection not recommended by MAYEKAWA.
  - Malfunction or damage caused by parts that are not MYCOM genuine.
  - Malfunction or damage caused by remodeling the product without approval of MAYEKAWA.
  - Malfunction or damage caused by unexpected misusage

“Liquid flow-back operation” is

Normally, while the compressor sucks in the refrigerant liquid only after vaporizing it in the evaporator, it may directly sucks it in because of the faulty adjustment or failure of the expansion valve. We call this state of compressor operation "liquid flow-back operation".

No compressor can compress a liquid. The compressor may be damaged should the liquid be sucked in.

Important Information

Intended Use of this Product

This product is a general purpose reciprocating compressor to be used for refrigeration, cold storage, or air conditioning. Do not use this product for any purposes other than the intended use or outside the scope of the specification. Refer to Chapter 2, Section 2.3 "Compressor Specifications" in this manual for the specification of this product.

In addition, it is requested that the maintenance actions described in this manual be taken using safe and secure procedures.

Precautions for Safe Use of this Product

Although MAYEKAWA has paid a lot of attention to safety measures for this product, all hazards including potential hazards caused by human errors, or due to environmental conditions cannot be anticipated.

In using this product, there are many things that are to be strictly followed or prohibited. However, it is impractical to communicate all of such matters in this manual or using warning labels. As such, in addition to the precautions provided in this manual, the user is required to consider other safety measures that are generally required.

The following points are important work safety suggestions for everyone including the manager, supervisor, and other personnel who may work on this product.

Before using this product, please read this manual carefully to sufficiently understand the details and securely implement the safety procedures described in this manual.

- The operation, maintenance, and inspection must be performed by a qualified person who has been provided with the basic technical knowledge on this product and trained on the potential risks and how to avoid the risks.
- Anyone other than the ones who have been provided with the basic technical knowledge on this product and trained on the potential risks and how to avoid the risks is not allowed to approach this product while it is operating or during maintenance.
- Be sure to comply with the applicable laws and regulations of the government and administrative organizations.
- To prevent accidents, do not use this product for any purpose other than the ones originally intended or perform operation/maintenance work in a manner not described in this manual.
- Be sure to use only MYCOM genuine parts for replacement.
- Both the operators and the responsible supervisor are requested to participate together in the health and safety related activities in their efforts to prevent accidents.
- Whenever it is necessary to close (or open) any valve of the package unit, be sure to use the lock-out and tag-out procedures to prevent accidental closure (or opening) of the valve during the work.

"Lock-out" is to prevent people other than the worker from using the item by locking it.

The term "lock-out" refers to the action to shut down (or keep shutting down) the source of (driving) energy to be supplied to the machine or equipment by locking the relevant device.

"Lock-out" is not complete by only turning off the switch of the power source to cut the energy supply. It means that a locking device must be used to lock (fix) the switch, valve, or other device in the shut-off position to prevent further operation by others.

The term "lock-out device" refers to a lock, cover, latch, or other device used to fix the switch, valve, open/close lever, or others securely in the shut-off position.

"Tag-out" is to prevent improper work of other people by attaching a tag plate that indicates "work in progress", for example.

"Tag-out" is to place a tag that clearly indicates that it is prohibited to operate the energy cut-off device while the (driving) energy source is being shut down. Such a marking tag is intended to give a warning that the energy source cannot be operated, by clearly marking "Operation Prohibited", "Startup Prohibited", "Do not open", etc., and it is not intended to actually operate the cut off device.

Be sure to strictly observe the following instructions regarding the maintenance work on the electric control:

- The work must be performed by a qualified person who has been trained on the electric control of the particular target system as well as on the potential risks inherent to electric control and how to avoid the said risks, on top of the generally required knowledge on electrical work.
- Whenever servicing or inspecting electric machinery, be sure to cut off the motor main power and control power, implement lock-out and tag-out procedures, and prevent any accidental application of power during the work.

However, it should be noted that the system may be energized from other sources even if the motor main power and control power are cut off, if power is supplied externally, i.e., not from the refrigeration/cold storage unit that uses this product. In such a case, be sure to cut off the power supply source, implement lock-out and tag-out procedures, and prevent any accidental application of power during the work.

About this Manual

- This product is subject to continuous development and improvement without prior notice. Accordingly, the details provided in this manual may partly differ from the actual condition. If any problem is found during work, please contact one of our sales or service establishments. For each sight of MAYEKAWA, refer to "Contact Information" in this manual or following URL. http://www.mayekawa.com/about/network/
- This manual is in English. If any other language is required, it is the customers responsibility to prepare a manual for safety education and operation instructions.
- MAYEKAWA owns the copyright of this manual. Any part of relevant drawings and technical documents, including this manual, may not be copied in any possible way, including the use of electronic media, without written consent of MAYEKAWA.
- The pictures and illustrations in this manual may not accurately represent the actual condition of the product.
- In case this manual is lost or damaged, please promptly place an order for the copy to one of our sales or service offices. The use of this product without this manual can be a cause of possible accidents.
- When you sell this product, be sure to transfer this manual to the next owner.

Structure of this Manual

Chapter/Section Title	Description
Introduction	Describes the outline and usage of this manual.
Warranty and Disclaimer	The scope of warranty by the Company is described. Provides disclaimer of warranty for the issues outside the scope of warranty.
Important Notice	Provides important information on the product as well as on this manual.
1. Safety	Safety information for the operator, safety measures used for this product, and work safety management required in using this product are described.
2. Compressor Specifications and Structure	Major components of this product, their functions, specifications, and service limits are described.
3. Installation	The installation procedures for this product are described.
4. Operation of Compressor and System	Precautions for the use of this product are described.
5. Maintenance and Inspection	Inspection points, inspection interval, and disassembly/assembly procedures for this product are described.
6. Troubleshooting	Major problems that may be experienced during the use of this product are listed together with the corresponding behavior and actions to take.
7. Related Documents	Parts development view, Parts configuration table, and other materials are provided.
Appendix: Basic Points of Compressor Packaging Work	Describes basic points for the design and manufacture of a K-series compressor package unit.
Contact Information	Information on our sales and service offices is provided for the customer to contact us when placing an order for MYCOM genuine parts, etc.

Table of Contents

Preface i
Revision history i
Warranty and Disclaimer ii
Warranty ii
Disclaimer of Warranty ii
Important Information iii
Intended Use of this Product iii
Precautions for the Safe Use of this Product iii
About this Manual v
Structure of this Manual v
Table of Contents vi

Chapter 1 Safety

1.1 Strict Requirements and Prohibitions 1-1
1.1.1 Strict Requirements (Do's) 1-1
1.1.1.1 Do's on Operation 1-1
1.1.1.2 Do's on Maintenance 1-1
1.1.1.3 Do's on Lock-out/Tag-out Procedures after Power is Off 1-2
1.1.1.4 Do's on Personal Protective Gear 1-2
1.1.1.5 Do's in Handling of Hazardous and Toxic Substances 1-2
1.1.1.6 Do's on the Response to Emergency Situations 1-2
1.1.1.7 Do's on the Disposal of Waste Oil, Waste Liquid, Scraps, etc. 1-2
1.1.1.8 Other Do's 1-3
1.1.2 Prohibitions (Don'ts) 1-3
1.2 Warning notices in This Manual 1-3
1.3 Residual Risks 1-4
1.4 Safety Devices 1-7
1.4.1 Emergency Stop Button 1-7
1.4.2 Circuit Breakers for the Motor and Controller Power Sources 1-7
1.4.3 Safety Cover (Drive System) 1-8
1.4.4 Safety Valve 1-8
1.4.5 Automatic Control and Protection Devices for the Compressor 1-9
1.4.6 No Water Alarm 1-11
1.4.7 Oil Heater and Thermal Switch (Optional Devices) 1-11

Chapter 2 Compressor Specifications and Structure

2.1 Overview of K-series Compressors 2-1
2.2 Model Designation of the Compressor 2-1

2.3 Compressor Specifications 2-2
2.3.1 Standard Specifications 2-2
2.3.2 Service Limits 2-3
2.3.3 Outer Dimensions 2-4
2.4 Structure and Mechanism of Compressor 2-12
2.4.1 Sectional View of the Compressor 2-12
2.4.2 Gas Compression Mechanism 2-13
2.4.2.1 Suction Stroke 2-13
2.4.2.2 Compression Stroke 2-13
2.4.2.3 Suction and Discharge Valves 2-14
2.4.3 Unloader Mechanism 2-14
2.4.3.1 Mechanism 2-14
2.4.3.2 Layout and Operation Sequence of the Unloader 2-15
2.4.4 Oil Supply Mechanism 2-17
2.4.4.1 Oil Supply Route 2-17
2.4.4.2 Oil Cooler 2-18
2.4.4.3 Lubricating Oil Amount 2-20
2.4.5 Shaft Seal 2-20
2.4.6 Safety Valve 2-20
2.4.7 Shape of the Shaft End 2-21
2.4.8 Connection with the Drive Unit 2-21
2.4.8.1 Direct Coupling Drive 2-21
2.4.8.2 V-belts Drive 2-22

Chapter 3 Installation

3.1 General Precautions during Installation 3-1
3.2 Installation Work 3-1
3.2.1 Unpacking 3-1
3.2.2 Storage 3-1
3.2.3 Transportation 3-2
3.2.4 Preparation for Installation 3-3
3.2.5 Installation 3-3
3.2.5.1 Placement 3-3
3.2.5.2 Oil Separator 3-3
3.2.5.3 Protection Devices 3-4
3.2.5.4 Oil Cooler 3-4
3.2.5.5 Piping 3-4
3.2.6 Shaft Alignment between the Compressor and Driving Machine (V-belts) 3-5
3.2.6.1 Alignment Method and Criteria 3-5
3.2.6.2 Belt Tensioning 3-5
3.2.7 Shaft Alignment between the Compressor and Driving Machine (Direct Drive). 3-6
3.2.8 Initial Charge 3-8
3.2.8.1 Lubricating Oil 3-8
3.2.8.2 Refrigerant 3-8
3.2.9 Checkout after Installation 3-8

Chapter 4 Operation of Compressor and System

4.1 Lubricating Oil (Refrigerant Oil) 4-1
4.1.1 Precautions for Selecting the Lubricating Oil 4-1
4.1.2 Changing the Brand of the Lubricating Oil 4-1
4.1.3 Management Criteria of the Lubricating Oil 4-2
4.1.4 Lubricating Oil Replacement Timing 4-3
4.1.4.1 After Starting the Initial Operation 4-3
4.1.4.2 During Normal Operation 4-3
4.1.5 Replenishment of Lubricating Oil 4-3
4.2 Initial Operation 4-4
4.2.1 Precautions for Initial Operation 4-4
4.2.2 Initial Operation Method 4-4
4.3 Operating Precautions 4-5
4.3.1 Start/stop limits 4-5
4.3.2 Liquid Flow-Back Prevention 4-5
4.3.3 Management of Daily Operation 4-6
4.3.3.1 Suction Pressure and Suction Temperature 4-6
4.3.3.2 Discharge Pressure and Discharge Temperature 4-6
4.3.3.3 Lubricating Oil Supply Pressure 4-6
4.3.3.4 Oil Amount (Oil Level) 4-6
4.3.3.5 Lubricating Oil Temperature 4-7
4.3.3.6 Contaminated Oil 4-7
4.3.3.7 Shaft Seal Oil Leakage 4-7
4.3.3.8 Power Transfer Components 4-7
4.3.3.9 Electric Motor 4-7
4.3.3.10 Other Items 4-7
4.4 When Stopping the Compressor for a Long Time 4-9

Chapter 5 Maintenance and Inspection

5.1 Precautions for Maintenance and Inspection 5-1
5.2 Maintenance and Inspection List 5-3
5.2.1 Daily Management 5-3
5.2.2 Periodic Inspection 5-4
5.2.3 Compressor Overhaul 5-5
5.2.3.1 Guideline for the Overhaul Timing 5-5
5.2.3.2 Level 1 Overhaul 5-5
5.2.3.3 Level 2 Overhaul 5-6
5.3 Preparation for Overhaul 5-7
5.3.1 Replacement Parts 5-7
5.3.2 Disassembly Tools and Workplace 5-7
5.3.3 Refrigerant Gas Recovery 5-7
5.3.4 Discharging the Lubricating Oil 5-8
5.3.5 Removal of V-belts or Coupling 5-8

5.4 Disassembly 5-9
5.4.1 Removal of Head Cover 5-9
5.4.2 Discharge Valve Assembly 5-10
5.4.3 Valve Plate 5-10
5.4.4 Hand Hole Cover 5-11
5.4.5 Cylinder Assembly 5-12
5.4.5.1 Pulling out the Cylinder Assembly 5-12
5.4.5.2 Pulling out the Connecting Rod and Piston 5-12
5.4.5.3 Cylinder Sleeve 5-13
5.4.5.4 Piston and Connecting Rod 5-13
5.4.5.5 Piston Ring 5-14
5.4.6 Unloader Mechanisms 5-15
5.4.7 Shaft Seal Block 5-16
5.4.8 Bearing Housing 5-17
5.4.9 Pump side Main Bushing and Thrust Washer 5-18
5.4.10 Oil Pump 5-18
5.4.11 Crankshaft 5-19
5.4.12 Shaft Seal side Main Bushing and Thrust Washer 5-19
5.4.13 Oil Filter 5-20
5.4.14 Suction Filter 5-20
5.4.15 Regulating Valve for Oil Pressure 5-20
5.4.16 Gas Equalizer 5-20
5.5 Reassembly 5-21
5.5.1 Crankcase 5-22
5.5.2 Crankshaft 5-22
5.5.3 Oil Pump, Main Bushing, Bearing Housing 5-23
5.5.4 Shaft Seal 5-24
5.5.5 Cylinder Assembly 5-25
5.5.5.1 Piston and Piston Ring 5-25
5.5.5.2 Piston and Connecting Rod 5-25
5.5.5.3 Cylinder Sleeve 5-26
5.5.5.4 Cylinder Sleeve and Piston・Rod Assembly 5-26
5.5.6 Installing Cylinder Assemblies in the Crankcase 5-27
5.5.7 Valve Assembly 5-28
5.5.7.1 Valve Plate 5-28
5.5.7.2 Discharge Valve Cage 5-29
5.5.8 Head Cover 5-30
5.5.9 Hand Hole Cover 5-30
5.5.10 Unloader Cover (with a solenoid valve) 5-30
5.5.11 Others 5-31

Chapter 6 Troubleshooting

■ The motor does not start 6-1
■ Abnormally high pressure 6-2
■ Discharge pressure is too low 6-3

■ Suction pressure is too high 6-3
■ Suction pressure is too low. 6-4
■ Abnormal noise during operation 6-4
■ Overheating of the crankcase 6-5
■ Excessive oil consumption 6-6
■ No cooling 6-7

Chapter 7 Related Documents

7.1 Development Views 7-1
7.2 Parts Configuration Table 7-5
7.3 Configuration of Plate Valves and Associated Parts 7-11
7.4 List of Tightening Torques for Bolts and Nuts 7-12
7.5 Criteria for Replacement of Parts 7-13
7.5.1 Suction Filter and Oil Filter 7-13
7.5.2 Crankshaft 7-13
7.5.3 Shaft Seal 7-14
7.5.4 Piston, Piston Pin, and Piston Ring 7-14
7.5.5 Connecting Rod Bearing Halves 7-15
7.5.6 Cylinder Sleeve 7-15
7.5.7 Discharge Valve Assembly and Suction Valve Assembly 7-16
7.5.8 Springs 7-16
7.5.9 Main Bushing and Thrust Washer 7-16
7.5.10 Oil Pump 7-17
7.5.11 Bolts 7-17
7.5.12 Gaskets and O-rings 7-17
7.6 Standard Assembly Clearance 7-19
7.7 Disassembly Tools 7-20

Appendix: Basic Points for K-series Compressor Package Unit

1. Basic Flow of the Package Unit Appendix-1
2. Refrigerant Line Appendix-2
3. Lubrication Line Appendix-3
4. Instrumentation Devices Appendix-3
5. Driving Devices Appendix-4
6. Protection Devices Appendix-4
7. Power Supply and Control Devices Appendix-5

Contact Information

Sales Offices and Service Centers

Chapter 1 Safety

1.1 Strict Requirements and Prohibitions

1.1.1 Strict Requirements (Do's)

1.1.1.1 Do's on Operation

- Each package unit must be installed with necessary safety devices and protection systems.
- The safety devices and protection systems must be regularly checked for their normal operation.
- If any safety device or protection system does not function normally or this product operates in an abnormal manner, immediately stop the work and contact your supervisor. When the system is to be restarted, you must observe the decision and instruction of the supervisor.
- If this product has stopped operation due to an unknown cause, immediately contact your supervisor. Before restarting the system, you must seek the decision and instruction of the supervisor.
- Depending on the type of refrigerant used, its leakage may generate a bad smell or poisonous gas.Be sure to sufficiently ventilate the room, especially while the machine is operated.
- Regarding the characteristics of the refrigerant and lubricating oil, e.g., corrosiveness, degradability, and toxicity, be sure to obtain the safety data sheet (SDS) of them and follow the instructions given.
- When this product is not to be used for some period of time, close the suction (side) and discharge (side) stop valves and shut off the motor power source, heater power, and control power.

1.1.1.2 Do's on Maintenance

- Prepare work procedures according to the work plan, and be sure to conduct appropriate hazard prediction activities before actually start working on the system.
- If two or more people are to work together, be sure to mutually check the work details and procedures before the work. During the work, always keep track of the other workers' actions.
- Before working on any problem encountered during operation, before setting up this product, before cleaning work, and before conducting maintenance or inspection work, be sure to shut off the motor power source, control power, and power to other equipment, perform lock-out and tag-out procedures, and take effective measures to prevent any accidental power-on during the work.
- Before working on any problem encountered during operation, before setting up this product, before cleaning work, and before conducting maintenance or inspection work, be sure to check that the internal pressure of this product and the refrigeration/cold storage unit is at the atmospheric pressure.
- Depending on the type of refrigerant used, it may generate a bad smell or poisonous gas or could cause an oxygen deficient atmosphere. Before starting the work, measure the oxygen content in the work area, as appropriate, and provide sufficient ventilation.The ventilation must be continued steadily until the work is completed.
- Regarding the characteristics of the refrigerant and lubricating oil, e.g., corrosiveness, degradability, and toxicity, be sure to obtain the safety data sheet (SDS) of them and follow the instructions given.
- After work, the tools used must be returned to the predefined location. Be sure not to leave them inside the package unit.

1.1.1.3 Do's on Lock-out/Tag-out Procedures after Power is Off

- A lock-out/tag-out mechanism must be installed for the main circuit breakers that supply power to the motor and power to the control system. The lock-out/tag-out after power down is a very effective means to ensure the safety when two or more workers are working on the system at the same time, as it can prevent possible injury of workers that may be caused by accidental power-on of the driving source by one of the workers.
- If there is a risk of danger, especially during cleaning, maintenance/inspection, or troubleshooting work, be sure to let the workers perform the lock-out/tag-out procedures after the motor main power and control power has been shut off.
- Because the workers may neglect to perform the lock-out/tag-out procedures or cut-off the power in the following situations, be sure to instruct them to strictly follow the correct procedure by clearly identifying the work that require lock-out/tag-out and the reasons why it is needed.
  - As it is a cumbersome task for the workers to cut off the motor main power and control power and use lock-out/tag-out devices before starting the work, they might neglect to do it.
  - The workers might determine by themselves that it should be OK just to cut off the motor main power and control power, and not to use any lock-out/tag-out devices.

1.1.1.4 Do's on Personal Protective Gear

- The work must be performed by preparing or using the personal protective gear that conforms to the applicable legal requirements and safety standards.
- Before use, each personal protective gear must be checked for proper functioning.
- Wear designated regular working wear or uniform and securely fasten the cuff buttons.
- Do not wear a tie or other accessories that may get caught by a moving or rotating part.
  Wear a helmet as your hair may also get caught.
- Do not put things in your pocket for not to drop them into the compressor package unit.

1.1.1.5 Do's in Handling of Hazardous and Toxic Substances

- For each of the hazardous and toxic substances, obtain the safety data sheet (SDS) from the manufacturer.
  Carefully check the details of the safety data sheet (SDS), handle the material according to the recommended handling procedures provided by the manufacturer, and keep the SDS in storage.

1.1.1.6 Do's on the Response to Emergency Situations

- Develop an emergency action plan according to the applicable legal requirements and post it at a safe place.

1.1.1.7 Do's on the Disposal of Waste Oil, Waste Liquid, Scraps, etc.

- Disposal of the refrigerant, oil, and other materials used in this product is restricted in various ways in terms of environmental protection. Be sure to dispose them at the designated site using specified procedures by observing the rules set forth by the applicable laws, regulations, and any voluntary regulations of the customer.

1.1.1.8 Other Do's

- The entire floor around the refrigeration/cold storage unit must always be kept clean, and safety passages must be provided.
- During work, walk only on the above mentioned safety passages. Note that the safety passages must always be kept free from hindrances such as tools, cleaning liquid, etc.
- When water or oil is spilled onto this product or on the floor, immediately wipe it off for not to cause someone to slip and be injured.

1.1.2 Prohibitions (Don'ts)

- Never remove or reposition any safety device based on your own judgment, including any modification of electrical interfaces.
- Never disable the function of safety devices by short-circuit connections or bypassing the circuits without prior permission.
- Never leave this product in an unsafe condition by removing a safety cover, etc.
- Do not touch, clean, or lubricate any moving part of this product.
- While power is turned on, never touch any energized part such as a relay terminal or terminal block by bare hand.

1.2 Warning Notices in This Manual

The warning notices given in this manual inform the user of any dangerous situation that may be expected during the work using the four categories as listed in the following table.

Ignorance of these warnings can lead to a significant personal injury, and in some extreme cases, it could lead to loss of life.

In addition, the main unit or any accessory equipment may be severely damaged. Be sure to observe the instructions in the warning notice.

Table 1-1 Warning Symbols and their Meanings

Symbol	Meaning
DANGER	Indicates that there is a high risk of death or severe injury if it is not avoided.
WARNING	Indicates that there is a potential risk of death or severe injury if it is not avoided.
CAUTION	Indicates that there is a risk of light or medium injury if it is not avoided.
CAUTION	Indicates that there is a potential risk of material damage if it is not avoided.

1.3 Residual Risks

The following information is provided assuming that this product will be operated, inspected, and maintained while it is used in a general refrigeration, cold storage, or air conditioning system. However, it is impossible for us to foresee all hazardous sources in the particular refrigeration, cold storage, or air conditioning system that the customer will actually use.

As such, the customer is requested to take proper measures regarding the possible hazardous sources.

Table 1-2 Hazardous Sources

	Hazardous Area	Predicted Hazard	Actions to Take During Operation	Actions to take During Cleaning, Inspection, or Parts Replacement
A	Driving Section	• Contact with or getting caught in a rotating part • Falling off of moving part • Recovery after interruption of energy supply	• Installation of a guard, cover, or other protection gear	• Lock-out/tag-out for the motor main power and control power
B	Head Cover	• Getting a burn by touching it when it is hot	• Installation of a guard or other protection • Wearing a personal protection gear	• Wearing a personal protection gear • Perform the work only when the temperature is 40°C or less
C	Discharge Elbow	• Getting a burn by touching it when it is hot	• Installation of a guard or other protection • Wearing a personal protection gear	• Wearing a personal protection gear • Perform the work only when the temperature is 40°C or less
D	Unloader Solenoid Valve	• Electric shock	• Installation of a guard or other protection • Wearing a personal protection gear	• Lock-out/tag-out for the control power
E	Heater	• Electric shock • Burn	• Installation of a guard, cover, or other protection gear • Wearing a personal protection gear	• Lock-out/tag-out for the power to the heater • Wearing a personal protection gear • Perform the work only when the temperature is 40°C or less
F	Suction (side) Stop Valve	• Contact with or inhalation of hazardous material • Low temperature burn	• Wearing a personal protection gear • Sufficient ventilation • Installation of a guard or other protection	• Wearing a personal protection gear • Sufficient ventilation

Table 1-2 Hazardous Sources (continued)

	Hazardous Area	Predicted Hazard	Actions to Take During Operation	Actions to take During Cleaning, Inspection, or Parts Replacement
G	Discharge (side) Stop Valve Discharge Piping	• Contact with or inhalation of hazardous material • Burn	• Wearing a personal protection gear • Sufficient ventilation • Installation of a guard or other protection	• Wearing a personal protection gear • Sufficient ventilation • Perform the work only when the temperature is 40°C or less
H	Gas Purge Valve	• Contact with or inhalation of hazardous material	• Wearing a personal protection gear • Sufficient ventilation	• Wearing a personal protection gear • Sufficient ventilation
I	Oil Drain	• Burn • Contact with hazardous material	• Do not touch while in operation	• Wearing a personal protection gear • Perform the work only when the temperature is 40°C or less
J	Noise	• Hearing impairment due to loud noise	• Wearing a personal protection gear	—
K	Motor	• Getting a burn by touching it when it is hot • Electric shock	• Wearing a personal protection gear	• Lock-out/tag-out for the motor main power and control power • Wearing a personal protection gear • Perform the work only when the temperature is 40°C or less

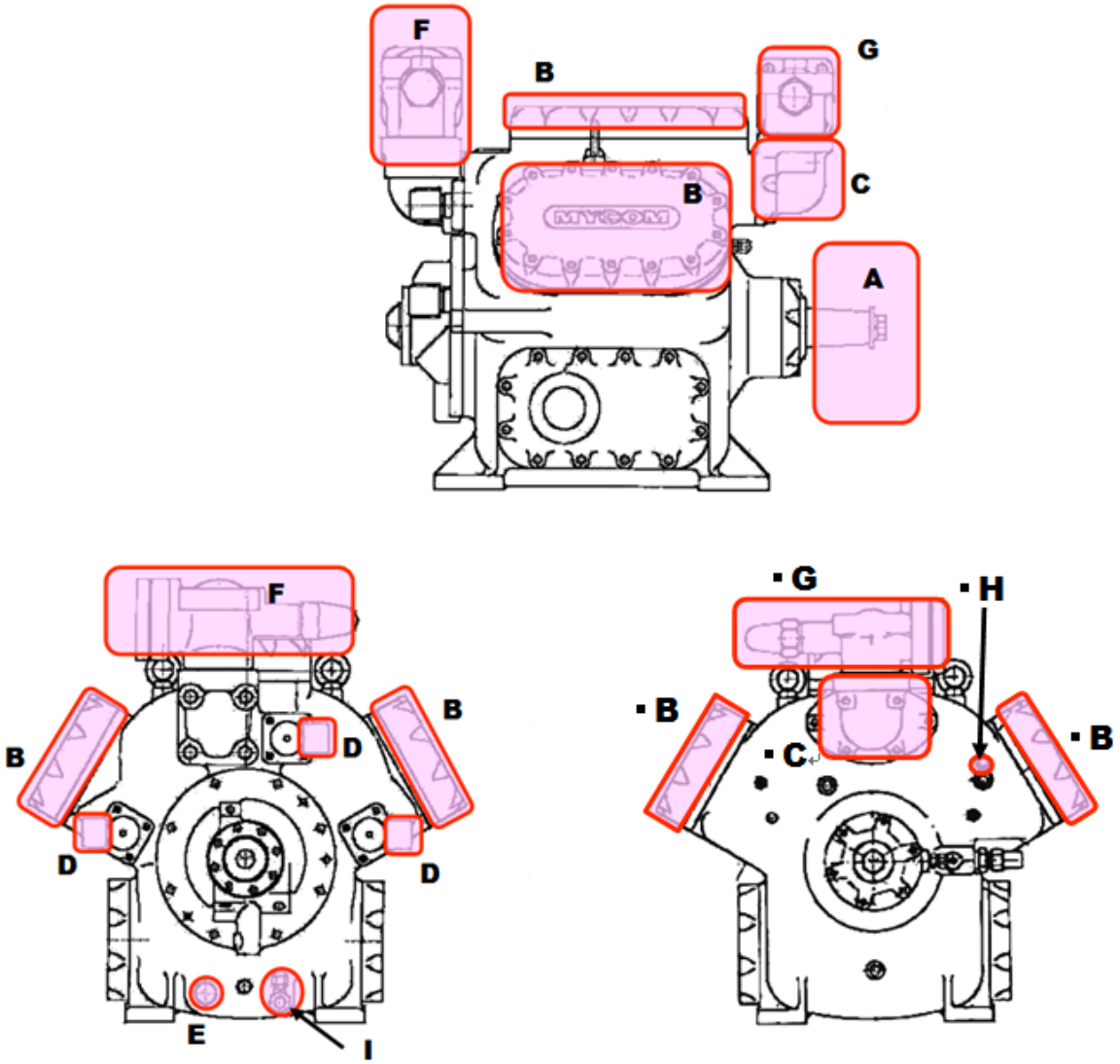

Symbol	Hazardous Area
A	Driving Section
B	Head Cover
C	Discharge Elbow
D	Unloader Solenoid Valve
E	Heater
F	Suction Stop Valve
G	Discharge Stop Valve
H	Gas Purge Valve
I	Oil Drain

Figure 1-1 Hazardous Sources (ex.: 6K)

1.4 Safety Devices

For the safe use and protection of this product, necessary safety devices must be equipped to your package unit as required by the applicable laws and regulations and according to the following descriptions.

To keep the safety devices in a normal condition at all times, proper and regular maintenance and inspection are essential. Accordingly, it must be treated as one of the essential tasks in the maintenance and inspection activities for the package unit. Be sure to provide the user of this product with sufficient information regarding the type of safety devices used their locations, functions, and how to inspect such safety-related devices.

WARNING

- **The safety devices must be checked for normal operation after this product is powered on and before starting the operation. If any of the safety devices does not function normally, a corrective action must be taken at once.**

1.4.1 Emergency Stop Button

■ Overview, functions, and objectives

This button is used for emergency shutdown of this product when an emergency situation arises.

■ Installation location

At the local control panel and in the operation control room

■ Stopping and recovery methods

The operating procedures for the emergency stop button, i.e., how to stop the operation and restore the normal operating condition, must be clearly defined and make sure to provide the information to the user of this product.

■ Inspection method and inspection interval

The emergency stop button must be tested for normal operation before the commissioning and at regular interval. The inspection procedures and the inspection interval for the emergency stop button must be clearly defined and make sure to provide the information to the user of this product.

1.4.2 Circuit Breakers for the Motor and Controller Power Sources (Use of Lock-out/Tag-out Mechanism)

■ Overview, functions, and objectives

If there is a risk of danger due to accidental power-on of the drive system during the work being conducted after the motor main power and control power have been shut off, e.g., during cleaning, maintenance/inspection, or troubleshooting work, it is necessary to install a lock-out/tag-out mechanism to the circuit breakers of the motor main power and control power in order to prevent possible injury of the workers.

■ How to implement and restore the lock-out/tag-out function

The methods of implementing and restoring the lock-out/tag-out function must be sufficiently communicated to the user of this product by clearly describing the said methods by referring to the relevant specifications provided by OSHA (Occupational Safety & Health Administration) or others.

■ Inspection method and inspection interval

The inspection procedures and the inspection interval for the lockout/tagout devices, must be clearly defined and make sure to provide the information to the user of this product.

1.4.3 Safety Cover (Driving Section)

■ Overview, functions, and objectives

The safety cover is used to prevent the workers from contacting with or getting caught in the driving section of this product.

■ Installation location

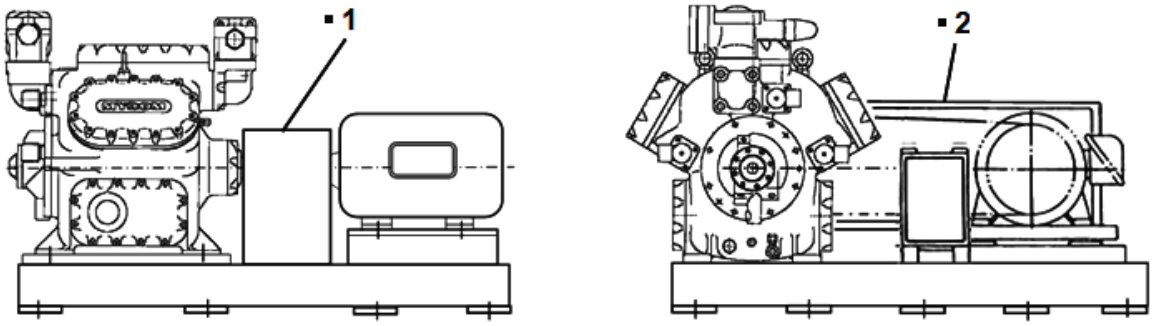

No.	Name
1	Safety cover (for direct drive)

No.	Name
2	Safety cover (for belts drive)

Figure-1-2 Example Installation of the Safety Cover for the Driving Section (6K)

■ Inspection method and inspection interval

The inspection procedures and the inspection interval for the safety cover must be clearly defined and make sure to provide the information to the user of this product.

1.4.4 Safety Valve

■ Overview, functions, and objectives

The safety valves are used to prevent rupture of the compressor when the internal pressure of the compressor becomes excessively high.

■ Installation location

K-series have two types of safety valves depending on customer requirement specifications. They are a internal built-in type and a external installing type. The current standard is the external installing type.

The internal built-in type is installed in the compressor discharge side, while the external installing type is not installed at the time of compressor shipment.

In the case of external installing type safety valve specifications, the safety valve on the discharge side must be installed between the compressor and the stop (service) valve. It must be functional even when the service valve is fully closed while the compressor is operated.

⚠ WARNING

- **The discharge side of the safety valve must be properly processed according to the applicable laws and regulations for the refrigerant type.**
  If ammonia gas is released in the air, it is likely to cause health damage such as intoxication or bad smell. If the gas is discharged into a closed space such as a machine room, it can cause a significant accident such as oxygen deficit.

■ Setting

The set pressure of the safety valve must be at or below the design pressure of the compressor. The set pressure of the safety valve must be clearly defined and make sure to provide the information to the user of this product.

■ Inspection method and inspection interval

The safety valve must be tested for normal operation before the commissioning and at regular interval. The inspection procedures and the inspection interval for the safety valve must be clearly defined and make sure to provide the information to the user of this product.

1.4.5 Automatic Control and Protection Devices for the Compressor

■ Overview, functions, and objectives

- Low oil pressure protection device (OP)

  When the oil pressure of the compressor (i.e., the oil pressure gauge reading minus the suction pressure) is reduced due to insufficient amount of the lubricating oil, clogging of the oil filter, and/or mixing of refrigerant into the lubricating oil, the motor drive circuit will be automatically shut down to stop the operation of the compressor.

- Abnormal high pressure protection device (HP)

  When the discharge pressure of the compressor becomes extremely high due to misoperation of the compressor, no water in the condenser, etc., this device will automatically cut off the motor circuit to stop the operation of the compressor.

- Compressor capacity control: Low pressure control device (LP)

  The automatic capacity control uses the signal detected by the low pressure control switch to open or close the solenoid valve in the hydraulic path. This will operate the unloader piston, which is the mechanism to control the capacity of the compressor. For the details of the unloader mechanism, refer to Chapter 2, Section 2.4.3 "Unloader Mechanism" in this manual.

■ Connecting point

Refer to Section 2.3.3 "Outer Dimensions" in this manual Chapter 2 for connection ports (outlets) of each pressure.

■ Setting

The setting of low oil pressure protection (OP), abnormal high pressure protection (HP) and low pressure control (LP) must be clearly specified by referring to the following table and the information provided to the user of this product.

Table 1-3 Example Settings

Device	Operate (ON)	Release (OFF)	Timer	Recovery
Low oil pressure protection device (OP)	Suction pressure +0.07 MPa	Suction pressure + 0.17 MPa	45 sec. ±20 sec	Manual recovery
Abnormal high pressure protection device (HP)	2.35 MPa or less	—	None	Manual recovery
Low pressure control device (LP)	Depends on the refrigerant used and the system.			Automatic recovery

【NOTE】

- Set the operating point for the abnormal high pressure protection device (HP) at a pressure lower than the safety valve starting pressure. It is recommended that it is set to a value any abnormality can be quickly detected, considering the refrigerant used and the system characteristics.
  In addition, if the pressure is electrically measured and a control circuit (e.g., programmable logic controller) is used to generate the alarm, it is recommended to generate a pre-alarm when the pressure gets near the abnormal level.

■ Inspection method and inspection interval

Each compressor protection device must be checked for the settings and tested for normal operation before starting or operating the compressor and must be periodically re-tested after that.

The inspection procedures and the inspection interval for each compressor protection device must be clearly defined and make sure to provide the information to the user of this product.

CAUTION
● **For the operational test, use a pressurization tester or other device to confirm that the alarm and/or switch are normally operated. Never operate the compressor in a dangerous condition, such as when the valves are fully closed.**

CAUTION
● **If the low oil pressure protection device (OP) or high pressure protection device (HP) is operated, the cause of the operation must be removed before recovery to the normal operation.**

1.4.6 No Water Alarm

■ Overview, functions, and objectives

This alarm is used to prevent possible overheating of the head cover and/or lubricating oil due to the inoperability of the water-cooling head cover and/or water-cooling oil cooler (for ammonia refrigerant specifications)

■ Installation location

Cooling water system

■ Setting

The no water alarm setting must be clearly specified and the information provided to the user of this product.

■ Inspection method and inspection interval

The no water alarm must be tested before the commissioning and must also be periodically re-tested after that. The inspection procedures and the inspection interval for the no water alarm must be clearly defined and make sure to provide the information to the user of this product.

1.4.7 Oil Heater and Thermal Switch (Optional Devices)

CAUTION
● **If the oil heater and the thermal switch is not dipped in oil when it is powered, the heater can be easily overheated and broken (heating with no oil). Always carefully check the oil level before applying power to the heater.**

■ Overview, functions, and objectives

The oil heater is a cartridge-type sheath heater. It is a pressure-resistant sealed type heater, with the heating wire covered by insulators and the outside of the unit is sealed by a stainless tube, and is designed to maximize the heat dissipation area.

The oil heater is used to prevent excessive mixing of the refrigerant into the oil as well as to prevent possible condensation of the refrigerant in the crank case while the compressor is not operated. As such, it is used only while the system is not operated (not used during operation).

■ Installation location

The thermal switch used to control the temperature of the heater is mounted inside the heater. The temperature setting dial can be checked by opening the heater cover.

■ Setting

The thermal switch setting must be clearly defined and make sure to provide the information to the user of this product.

■ Inspection method and inspection interval

The thermal switch must be tested before commissioning and must also be re-tested after that.
The inspection procedures and the inspection interval for the thermal switch must be clearly defined and make sure to provide the information to the user of this product.

Chapter 2 Compressor Specifications and Structure

2.1 Overview of K-series Compressors

MYCOM The K-series reciprocating compressors have the reciprocating piston mechanism and are designed to be compatible with various types of refrigerant. This series includes six models (2K, 4K, 6K, 8K, 12K and 62K), based on the number of cylinders.

If necessary, there are particularly dedicated instruction manuals for 12K and 62K, refer them to in conjunction with this manual.

These models fill the capacity gap between the MYCOM C-series and A/WA-series compressors. They are designed with a compact profile, light weight and high-speed performance, and can be directly driven by a 4-pole motor or a diesel engine.

Moreover this series does not require the installation an oil cooler under standard refrigeration conditions (except ammonia refrigerant specifications) and has less external piping since the capacity control hydraulic piping and lubricating oil piping are all incorporated in the compressor to achieve a neat appearance and facilitating maintenance work around the unit.

In addition, semi-hermetic compressors newly added K-series for exclusive use of the ammonia refrigerant for 4K, 6K, 8K and 62K.

When you need an instruction manual for K-series ammonia semi-hermetic compressors, refer to the separately dedicated manual from them in conjunction with this manual.

.

2.2 Model Designation of the Compressor

The meaning of the type designation stamped on the nameplate of the compressor MODEL column is as follows.

[1]	[2]	[3]
N	**6**	**K**

[1] Working fluid（refrigerant）

Symbol	Meaning
N	Ammonia (NH_3)
F	Fluorocarbon refrigerant
P	Propane

[2] Number of cylinder

Symbol	Meaning
2	2 cylinders
4	4 cylinders
6	6 cylinders
8	8 cylinders
12	12 cylinders

[3] Series name

Symbol	Meaning
K	K-series

2.3 Compressor Specifications

2.3.1 Standard Specifications

Table 2-1 Standard Specifications of the K-series Compressors

Item				2K	4K	6K	8K
Refrigerant			-	Ammonia, Fluorocarbon, Propane			
Structure			-	Open reciprocating type	Open reciprocating type, Semi-hermetic reciprocating type		
Cylinder bore			mm	85			
Stroke			mm	65			
Rotation speed			min^{-1}	900 to 1800			
Swept volume	900 min^{-1}		m^3/h	39.8	79.7	120	159
	970 min^{-1}		m^3/h	42.9	85.9	129	172
	1170 min^{-1}		m^3/h	51.8	104	155	207
	1450 min^{-1}		m^3/h	64.2	128	193	257
	1750 min^{-1}		m^3/h	77.5	155	232	310
Drive method			-	Direct drive, V-belts drive	Direct drive, V-belts drive, Semi-hermetic motor drive		
V-pulley	Model × number of groove			5V×2	5V×5		
	Pitch circle diameter		mm	P.C.D. 280			
Capacity control	Method		-	Hydraulic pressure-controlled solenoid valve			
	Power source		V	100V, 110V/200V, 220V			
	Range	Fluorocarbon, etc.	%	100,50	100,75,50,25	100,83,66 50,33	100,75,50,25
		Ammonia	%	100,50	100,50	100,66,33	100,75,50,25
Safety Valve			-	Internal built-in type, External install type			
Lubricating oil	Selection		-	Viscosity: ISO-VG 46 to VG68 For details, refer to Section 4.1 in this manual.			
	Oil pressure		MPa	Suction pressure + 0.20 to 0.3			
	Filling amount		L	8.0	9.0	9.0	10.0
Stop valve bore	Suction		-	32A	50A	65A	80A
	Discharge		-	25A	40A	50A	65A
Product mass			kg	195	285	336	403

- Unless otherwise specified, the pressure unit "MPa" represents the gauge pressure in this manual.
- Consider the amount of lubricating oil as a mere reference for a single compressor (not including oil cooler, oil piping, etc.)
- The product mass includes that of head cover and water-cooled oil cooler, but not that of V-pulley.

2.3.2 Service Limits

Table 2-2 Service Limits for the K-series Compressor

Item	Unit	Limit value	Remarks
Maximum discharge pressure	MPa	2.35 (Fluorocarbon) (Propane)	Varies with the set pressure of the safety valve used.
		2.26 (Ammonia)	
Maximum suction pressure	MPa	0.69	
Maximum differential pressure at high/low pressure	MPa	1.96	
Maximum oil supply pressure	MPa	Ps + 0.4	Ps = Suction pressure
Minimum oil supply pressure	MPa	Ps + 0.1	Ps = Suction pressure
Maximum discharge gas temperature	°C	120 (Fluorocarbon) (Propane)	
		140 (Ammonia)	
Maximum supply oil temperature	°C	70 (Fluorocarbon) (Propane)	Temperature at oil chamber or temperature at oil cooler inlet port
		50 (Ammonia)	
Minimum supply oil temperature	°C	30	
Maximum speed	min^{-1}	1800	
Minimum speed	min^{-1}	900	
Maximum belt drive power	kW	112	
Maximum cooling water outlet temperature	°C	50	Head jacket and oil cooler outlet temperature
Maximum cooling water pressure	MPa	0.5	
Degree of superheat: SH	°C	20 or less	Liquid flow-back is not allowed.

- Unless otherwise specified, the pressure unit "MPa" represents the gauge pressure in this manual.
- In the case of ammonia refrigerant, when SH is too high, it is easy to cause the decline of the volumetric efficiency of the compressor due to overheating of the discharge gas. We recommend 10 °C to 15 °C as SH.
- Refer to Section 4.3.1 "Start/Stop Limits" in this manual for the limitations (start and stop limits) to be applied when the running compressor is stopped and restarted.

2.3.3 Outer Dimensions

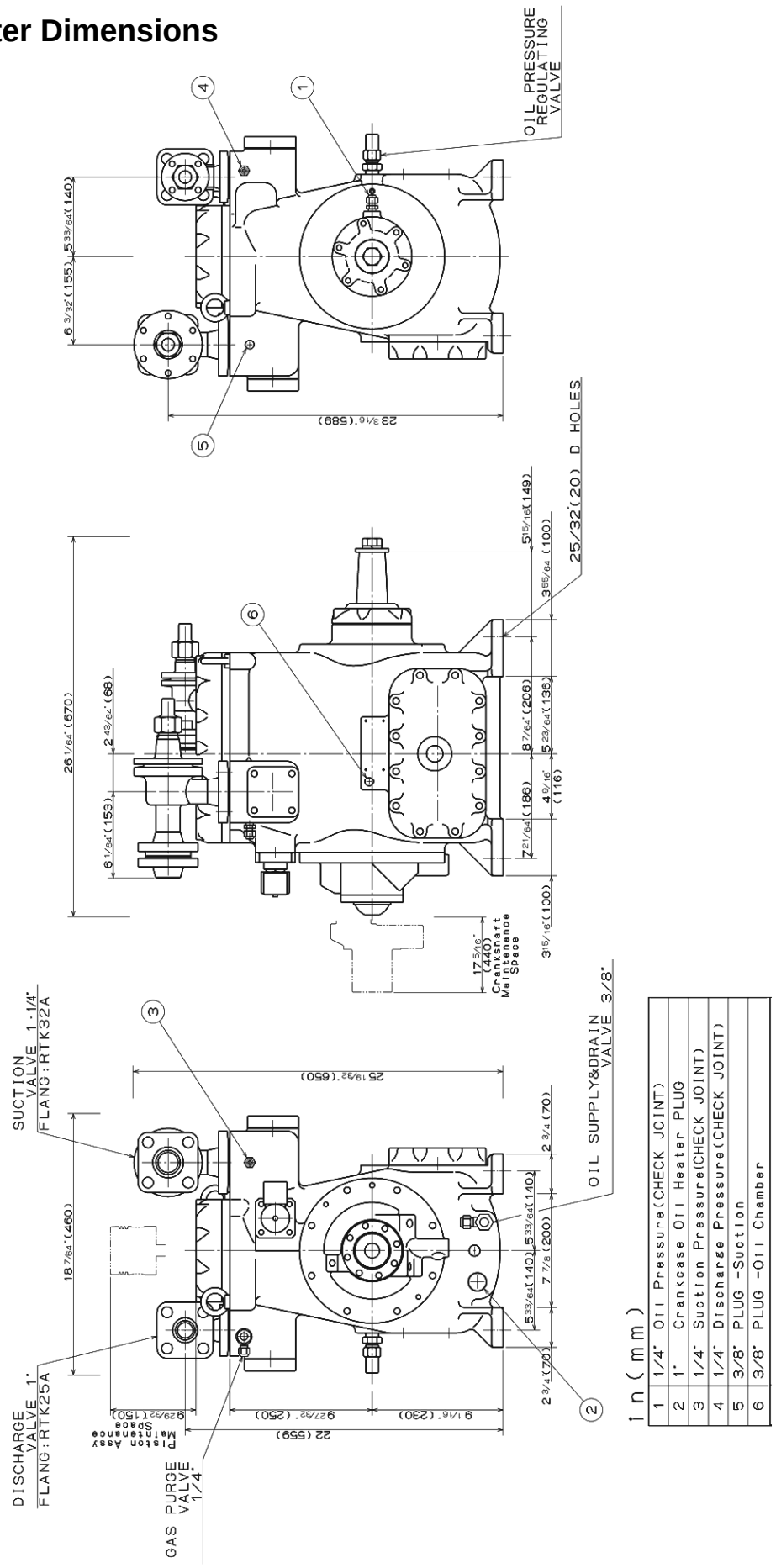

Figure 2-1 Outer Dimensions (2K)

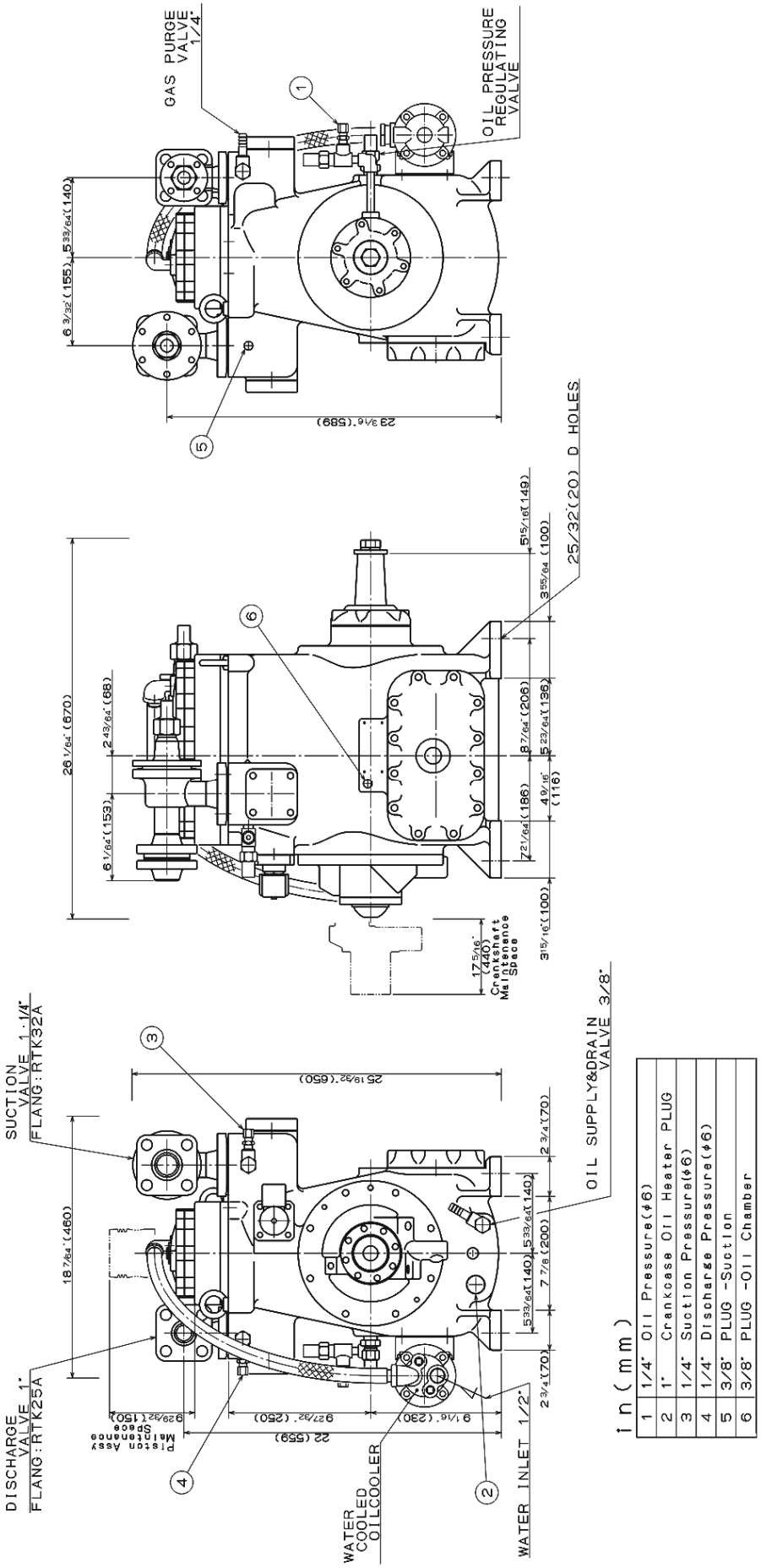

Figure 2-2 Outer Dimensions (N2K)

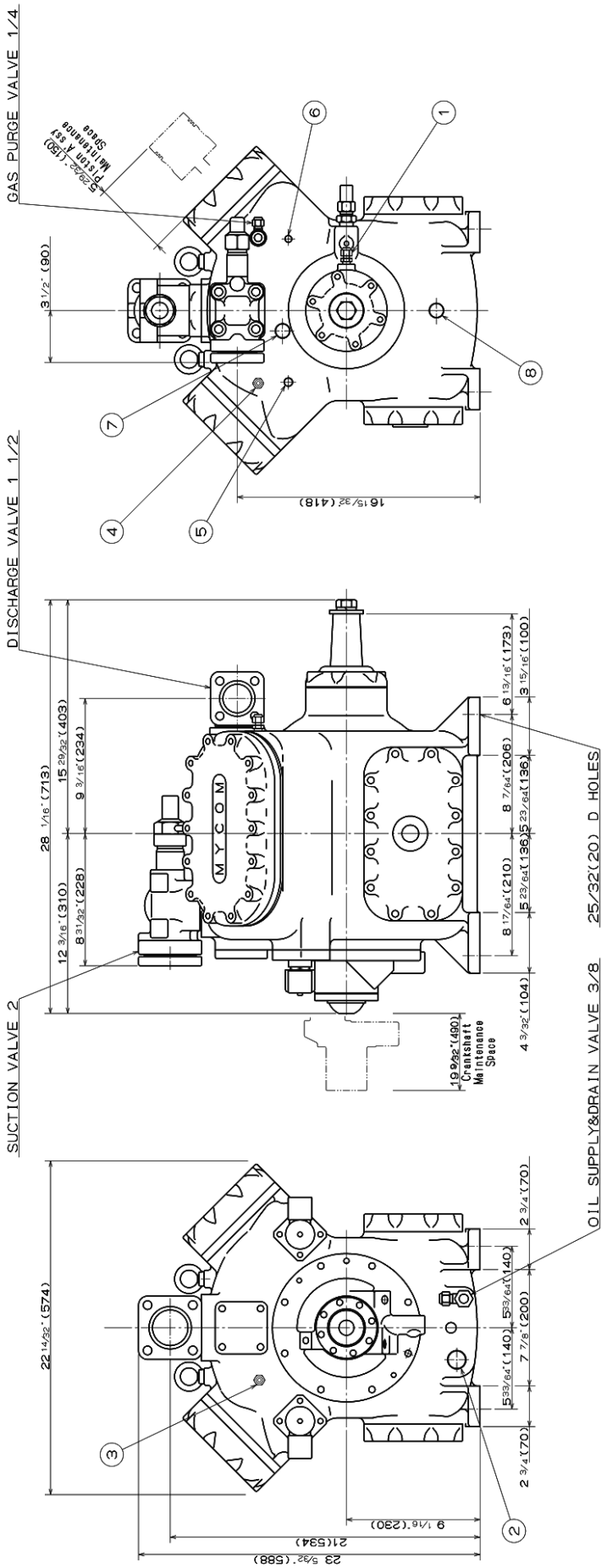

Figure 2-3 Outer Dimensions (4K)

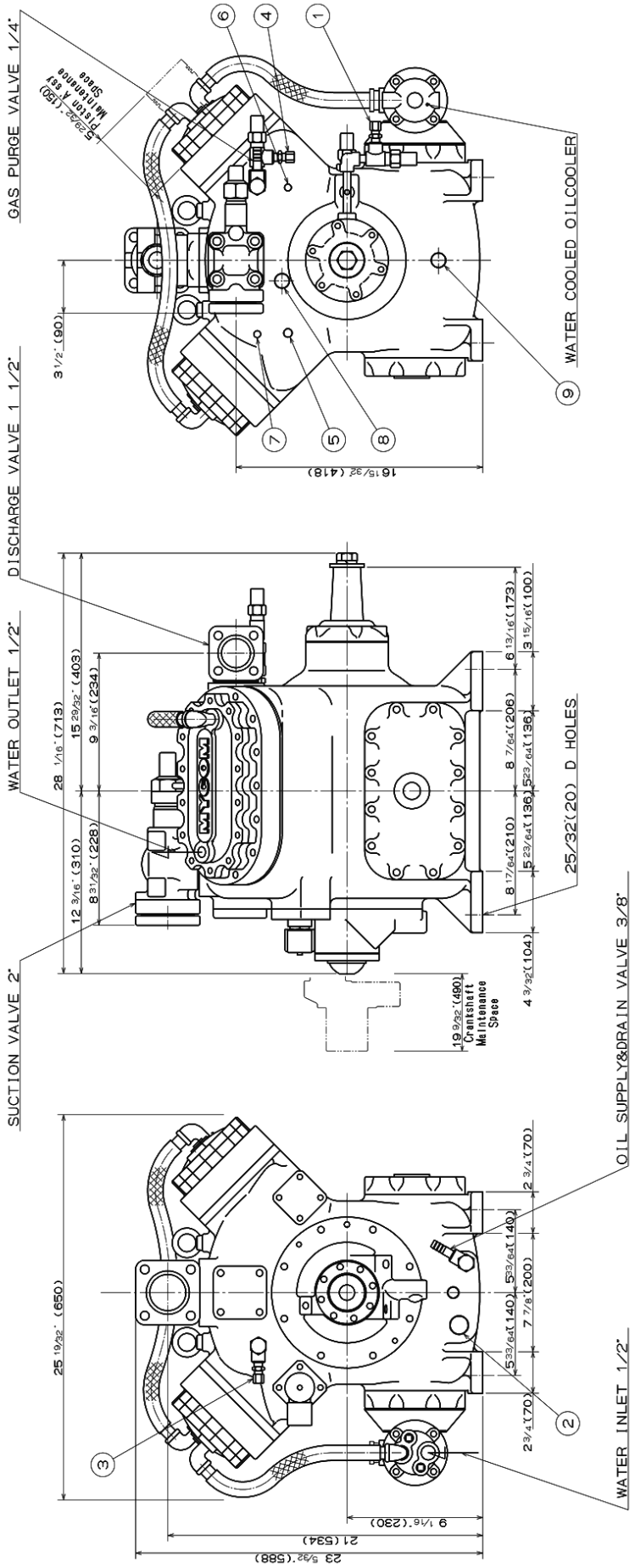

1	1/4	Oil Pressur(φ6)
2	1"	PULG -Crankcase Oil Heater
3	1/4	Suction Pressur(φ6)
4	1/4	Discharge Pressur(φ6)
5	3/8	PLUG -Suction
6	1/4	PLUG -Suction
7	1/4	PLUG -Discharge
8	3/4	PLUG -Oil Chamber
9	3/4	PLUG -Oil Chamber
10	1/2	PLUG -Discharge

(in (mm))

Figure 2-4 Outer Dimensions (N4K)

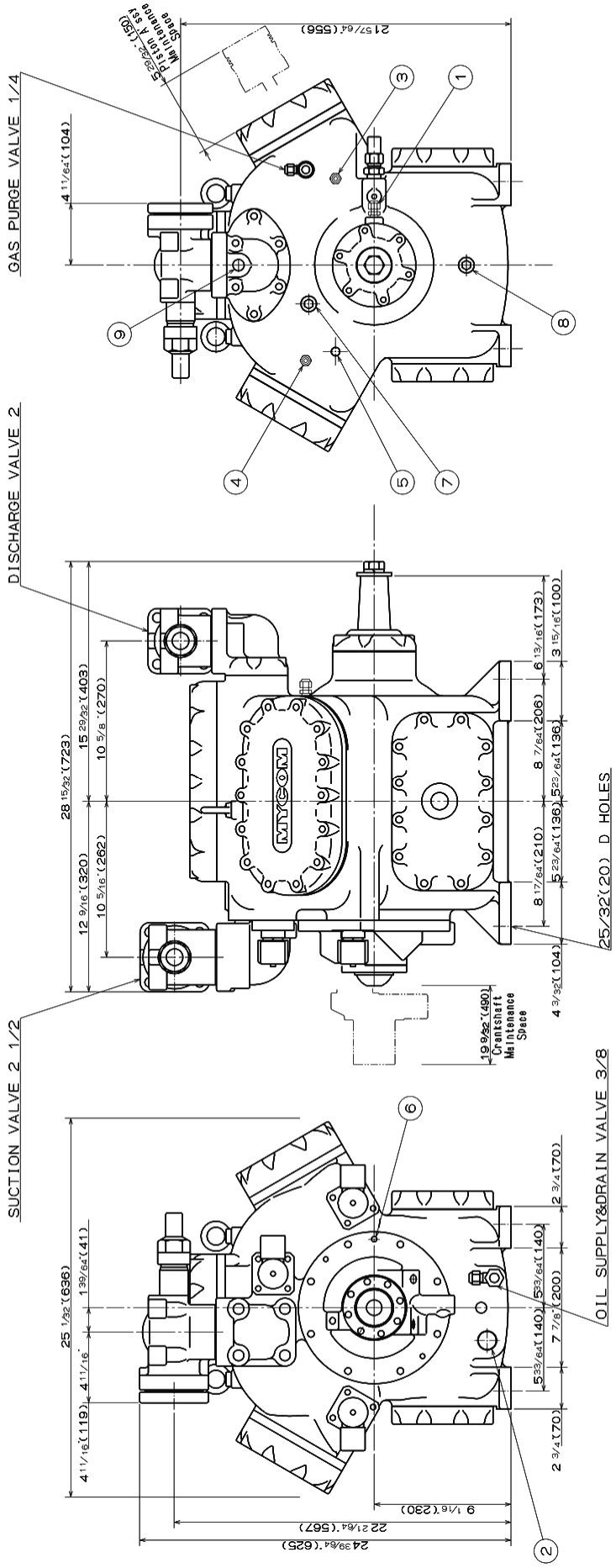

Figure 2-5 Outer Dimensions (6K)

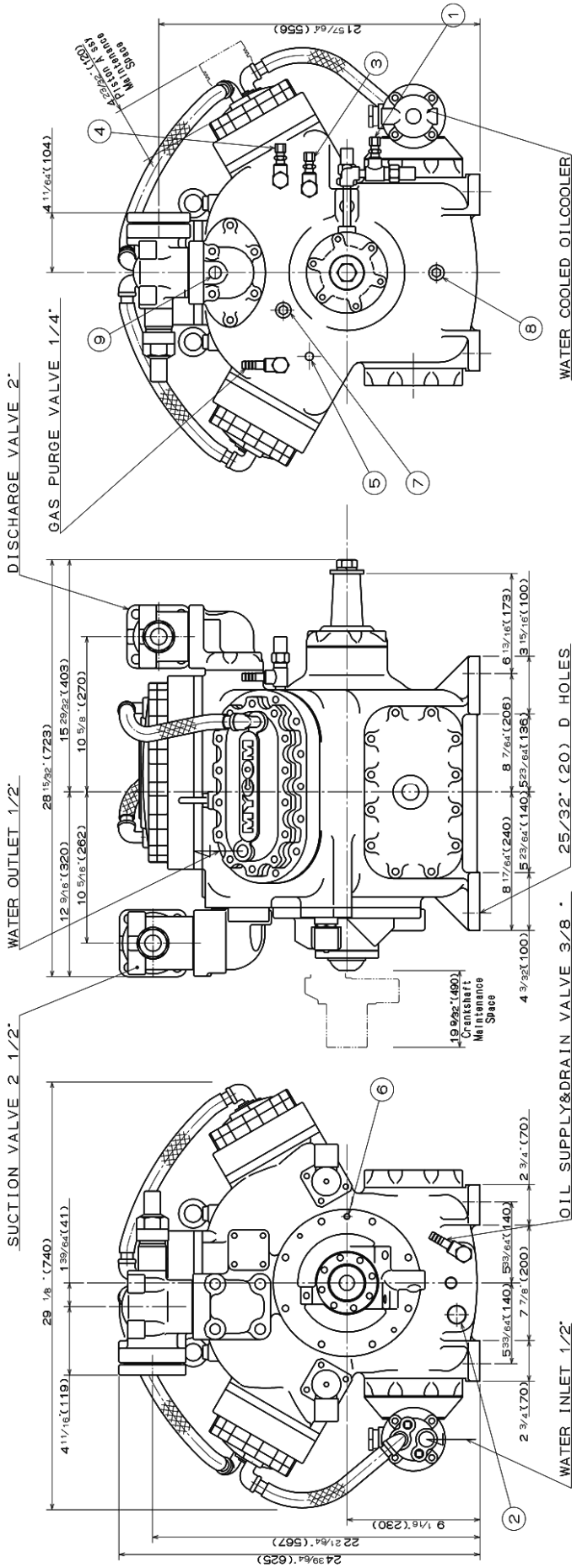

Figure 2-6 Outer Dimensions (N6K)

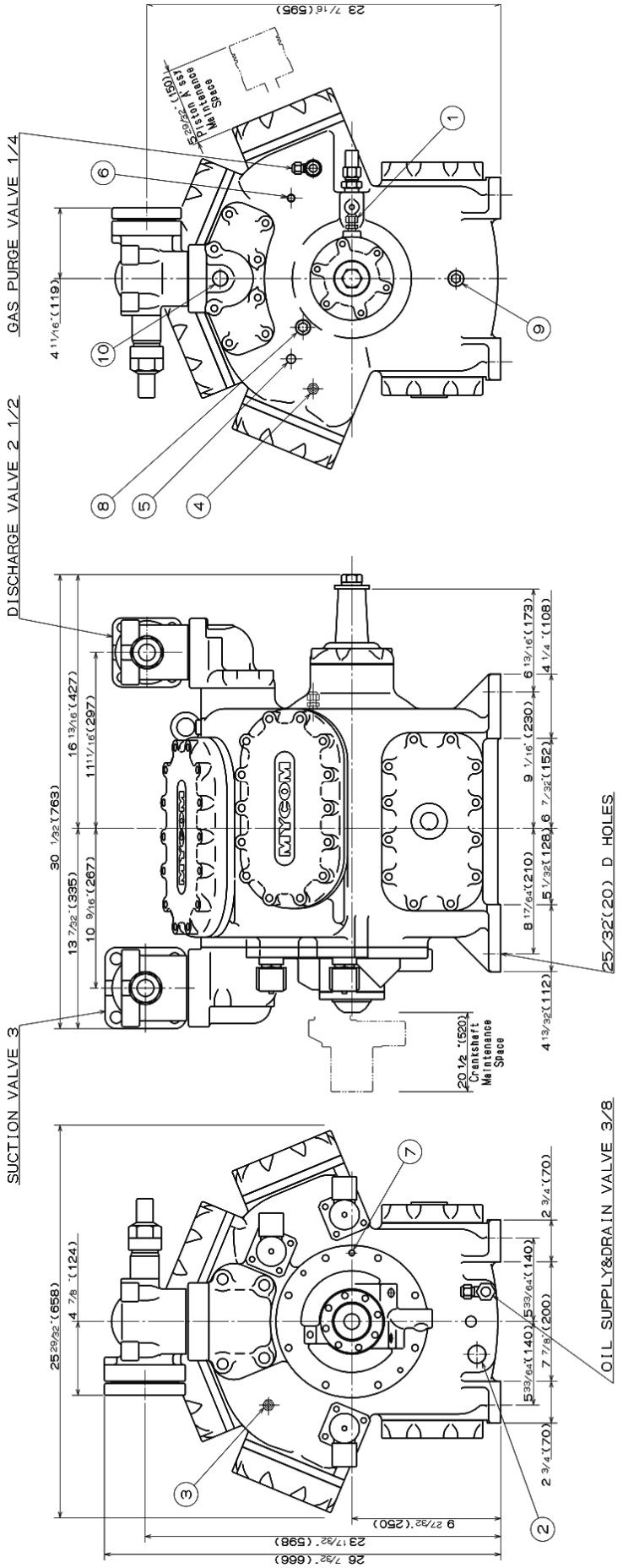

1	1/4 Oil Pressur (CHECK JOINT)
2	1" Crankcase Oil Heater PLUG
3	1/4 Suction Pressur(CHECK JOINT)
4	1/4 Discharge Pressur(CHECK JOINT)
5	3/8 PLUG -Suction
6	1/4 PLUG -Suction
7	1/4 PLUG -Oil Chamber
8	3/4 PLUG -Oil Chamber
9	3/4 PLUG -Oil Chamber
10	3/4 PLUG -Discharge

Figure 2-7 Outer Dimensions (8K)

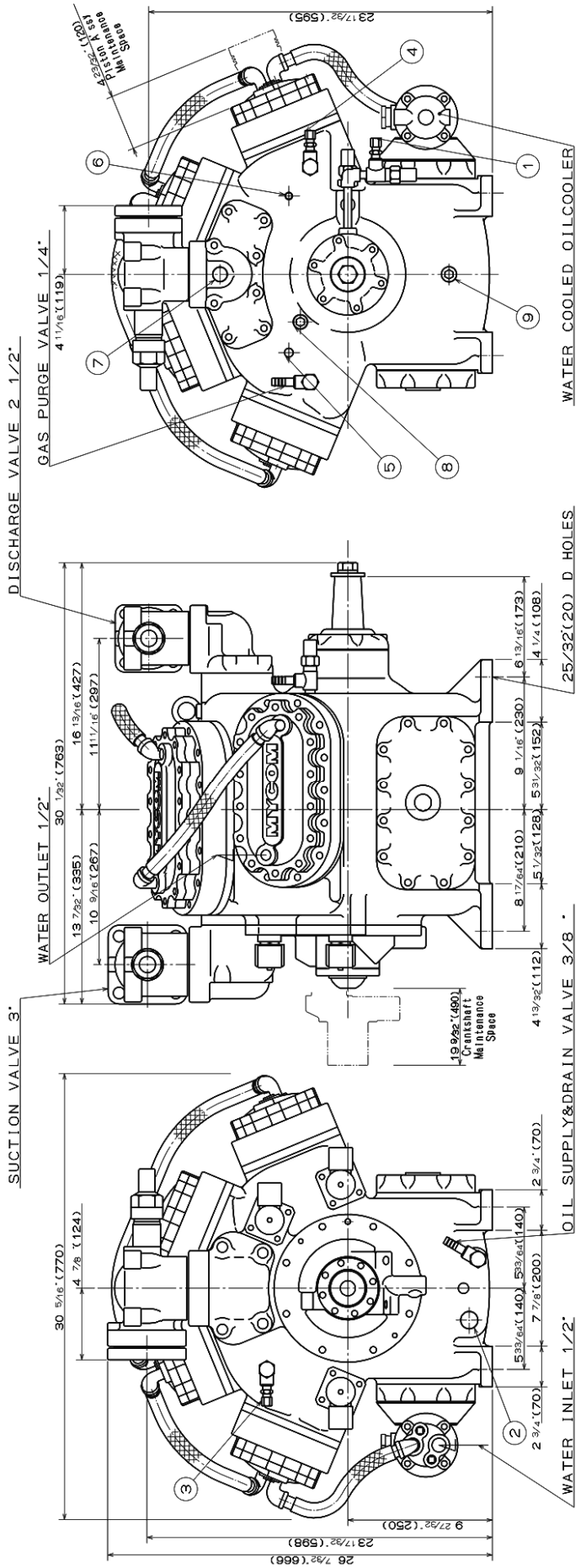

in (mm)

1	1/4 Oil Pressur(φ6)
2	1" Crankcase Oil Heater PLUG
3	1/4 Suction Pressur(φ6)
4	1/4 Discharge Pressur(φ6)
5	3/8 PLUG -Suction
6	1/4 PLUG -Suction
7	1" PLUG -Discharge
8	3/4 PLUG -Oil Chamber
9	3/4 PLUG -Oil Chamber

Figure 2-8 Outer Dimensions (N8K)

2.4 Structure and Mechanism of Compressor

2.4.1 Sectional View of the Compressor

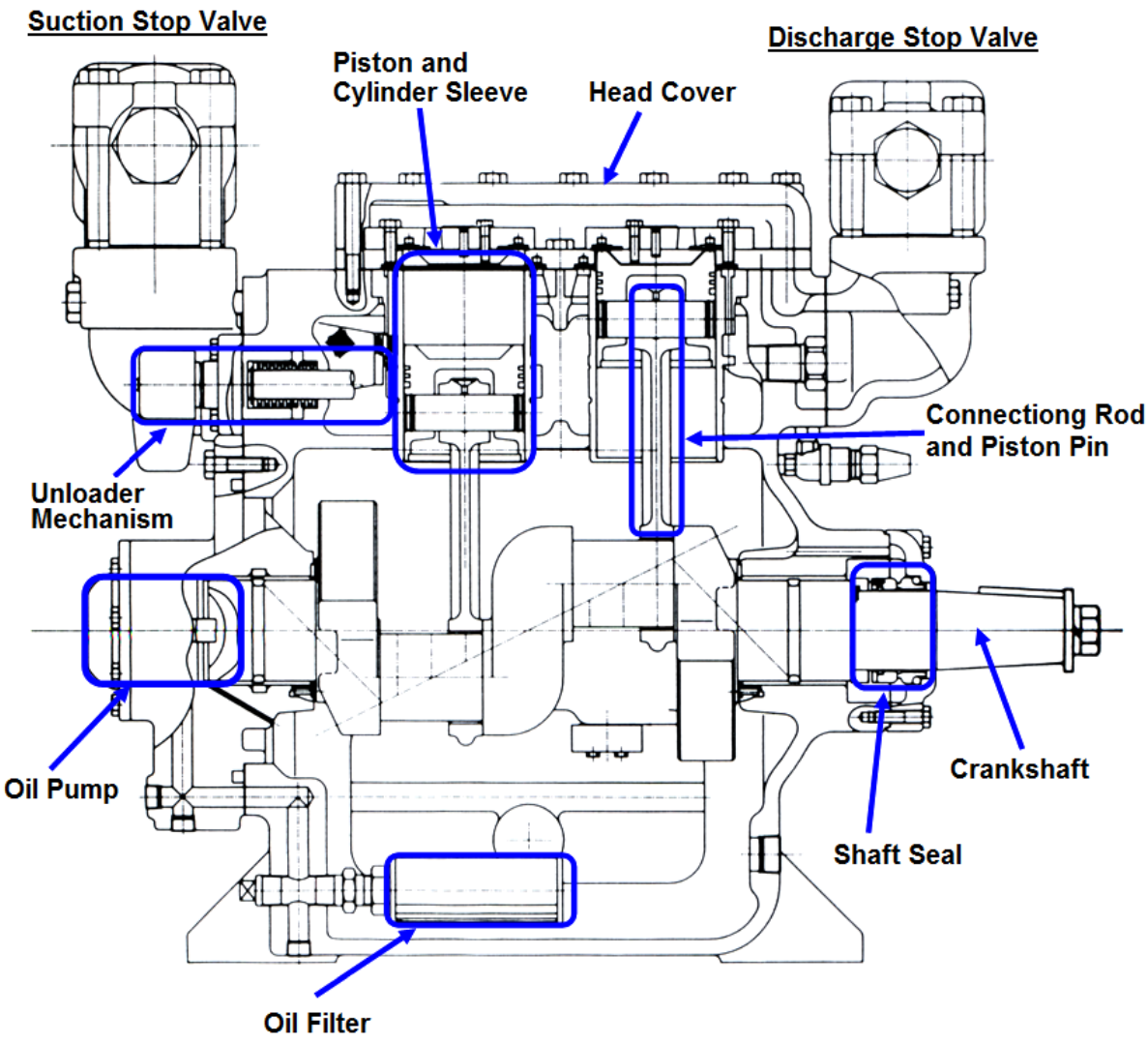

Figure 2-9 Sectional View of the Compressor (example)

2.4.2 Gas Compression Mechanism

The inside structure of the compressor is such that the gas discharge compartment is separated from the gas suction compartment in an integrated construction casted crank case.
The crankshaft, i.e., the drive shaft, which is supported by bearings at both ends, forms a crank to convert the rotating motion to the reciprocating motion. By linking the connecting rod to the crank (crank-pin), the piston is moved up and down to suck and compress the refrigerant gas. The crank has oppositely placed two crank pins (separated by 180 degrees in phase), and each pin is assembled with the connecting rods, the number of which is half the number of cylinders.
One rotation of the crank shaft makes one up/down cycle of the piston. When the piston goes down, the suction stroke is performed, and when the piston goes up, the compression/discharge stroke is performed.

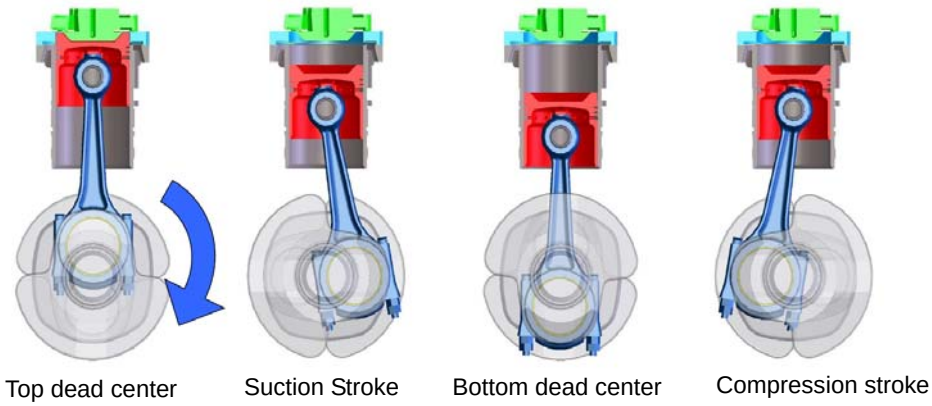

Figure 2-10 Movement of the Crank Shaft and Piston

The cylinder layout of K-series: 2K is 2 cylinders × 1 line layout; 4K is 2 cylinders × 2 lines layout (crank angle interval of 90 degrees); 6K is 2 cylinders × 3 lines layout (crank angle interval of 60 degrees); and 8K is 2 cylinders × 4 lines layout (crank angle interval of 22.5 degrees).

Mechanical seals are used for sealing the crank shaft.

2.4.2.1 Suction Stroke

a) When the piston goes down, the discharge plate valve is pressed onto the seat surface of the cylinder lip by the gas pressure after the discharge and the discharge valve spring force.

b) While the piston continues to go down, a pressure difference is generated between the suction gas chamber and the cylinder, of which gas pressure pushes up the suction plate valve from the path through the cylinder lip. As a result, the refrigerant gas vaporized in the evaporator flows into the cylinder.

c) When the piston reaches the bottom dead center, the gas chamber pressure becomes approximately equal to the cylinder internal pressure, and the suction plate valve is pushed onto the seat surface by the suction valve spring force. This completes the suction stroke and it move to the compression stroke.

2.4.2.2 Compression Stroke

a) As the crank shaft rotation continues, the piston starts to go up. When the gas pressure inside the cylinder starts to increase, the cylinder internal pressure is applied to the back of the suction plate valve and the valve is further pressed closely onto the seat surface.

b) As the piston further goes up, the gas pressure inside the cylinder is further increased. When the pressure exceeds the pressure of the condenser, it pushes up the discharge plate valve to discharge the gas from the cylinder to complete the compression stroke at the top dead center. By repeating the above cycle, continuous compression will be made.

2.4.2.3 Suction and Discharge Valves

The K-series compressors have a structure in which valve plate is attached to each two-cylinder.

The discharge valve assembly is fixed on the valve plate by the bolts to eliminate the head spring.

Moreover, a ring valve is used to minimize the top clearance according to the shape of discharge valve seat and piston top to form a gas damper that can absorb the impact on the back. This design is based on the experiences with other models which employ the cone-shaped spring to generate different spring forces.

2.4.3 Unloader Mechanism

2.4.3.1 Mechanism

The unloader (capacity control) mechanism controls the capacity of the compressor by regulating operation of the suction valve using an oil pressure driven unloader piston for actuation.

Detailed mechanism is as follows:

The suction valve seat of each cylinder is provided with a lip on the top of the cylinder sleeve.

Refrigerant gas flows into the cylinder from the gas passage between the outside sheet and the inner side sheet. A vertically operating lift pin is fitted in the center of the seat.

The top of the lift pin contacts the suction plate valve while the bottom contacts the slant face of the cylinder cam turning around the cylinder circumference. The cylinder cam (cam ring) is rotated by an oil pressure driven push rod, moving the lift pin up and down as the cam ring rotates.

When the pin descends and reduces seat level, the suction plate valve operators freely according to the pressure difference on the seat. When the pin pushes upon the suction plate valve as the cam ring is rotated, the suction plate valve cannot operate despite the pressure difference. In other words, gas entering the suction port is not compressed even though the piston moves up and down, and no gas is discharged. Under this condition the cylinder is said to be in an "unload" state.

The cam activating the lift pins is activated by push rod, unloader piston and a spring. When no oil pressure is applied to the unloader piston, spring force positions the system in the "unload" state. Capacity control is therefore performed by cutting off oil pressure to the unloader piston using a three-way solenoid valve.

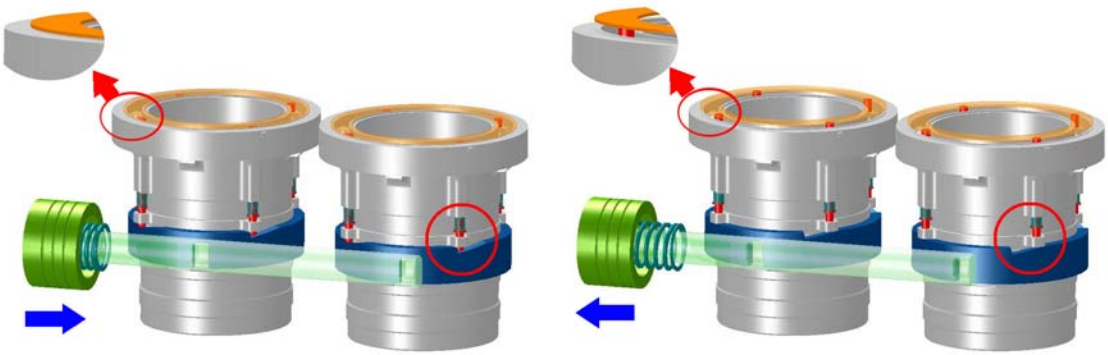

Figure 2-11 Unloader Mechanism

2.4.3.2 Layout and Operation Sequence of the Unloader

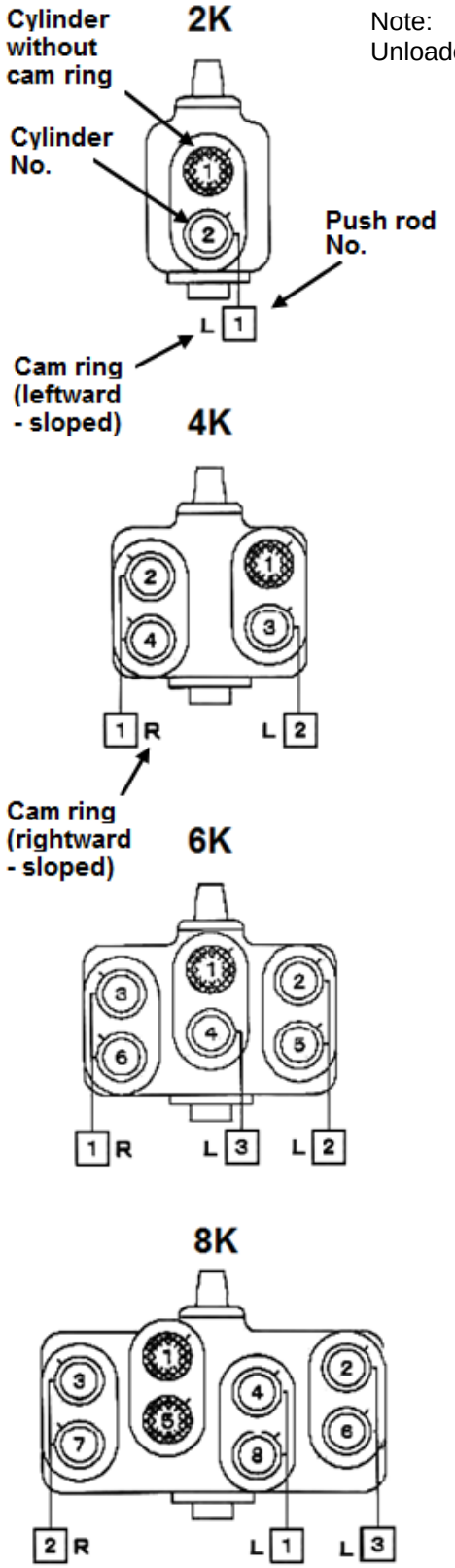

Note:
Unloader mechanism is loaded with the solenoid valve ON (open).

Cylinder in compression when loading

2K

0%	50%	100%
Standstill	①	①
	-	②

4K

0%	25%	50%	75%	100%
Standstill	①	①	①	①
		③		③
		-	②④	②④

6K 16.6% only at startup.

0%	16.6%	33%	50%	66%	83%	100%
Standstill	①	①	①	①	①	①
		④		④		④
		-	②⑤	②⑤	②⑤	②⑤
		-		-	③⑥	③⑥

CAUTION

- **When using 6K compressor, do not shut off all of the unloader solenoid valve (16.6% loaded state) except at startup.**
  Compressor is broken in overheating operation.

8K

0%	25%	50%	75%	100%
Standstill	①⑤	①⑤	①⑤	①⑤
	-	②⑥	②⑥	②⑥
	-	-	③⑦	③⑦
	-	-	-	④⑧

Figure 2-12 Unloader Layouts (Except NH_3 refrigerant specifications)

Cylinder in compression when loading

N2K

0%	50%	100%
Standstill	①	①
	-	②

N4K

0%	50%	100%
Standstill	① ③	① ③
	–	② ④

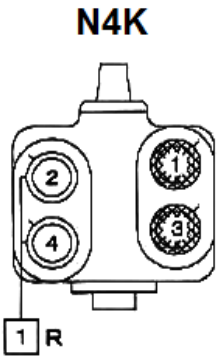

N6K

0%	33%	66%	100%
Standstill	① ④	① ④	① ④
	–	② ⑤	② ⑤
	–	–	③ ⑥

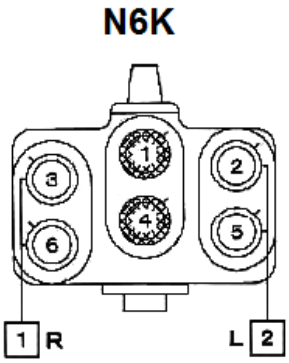

N8K

0%	25%	50%	75%	100%
Standstill	① ⑤	① ⑤	① ⑤	① ⑤
	–	② ⑥	② ⑥	② ⑥
	–	–	③ ⑦	③ ⑦
	–	–	–	④ ⑧

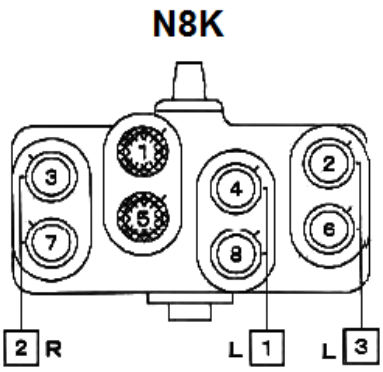

Figure 2-13 Unloader Layouts (NH_3 refrigerant specifications)

2.4.4 Oil Supply Mechanism

The lubricating oil piping of K-series compressors with the standard specification is designed all as internal piping made of casting hole and machining hole, except the joint for the oil filter.

On the suction side of the oil pump, one fine mesh (#20) oil filter is equipped. As a sufficient passage area is ensured, no problem will arise with units at a typical purity level.

The oil pump has the trochoidal gears with the reversible mechanism, thus the oil delivery direction is fixed regardless of crankshaft rotational directions.

The oil pressure control valve has such a structure that the entire valve is depressed on the seat by the spring. Thus, the valve regulates oil pressure is automatically in a certain range, and relieves abnormally high pressure with its safety mechanism.

2.4.4.1 Oil Supply Route

The bottom of the crankshaft chamber in the crankcase serves as an oil reservoir. Lubricating Oil passes through the oil filter and is sucked into the oil pump. Oil pump is driven with the crankshaft and pressurizes lubricating oil. The pump is a reversible trochoidal type which discharges the oil in one direction only irrespective of the direction of shaft rotation.

Oil discharged from the oil pump passes through a machined hole and branches a long two routes, one leading to the main bushing oil lubrication hole and the other leading to the lubrication groove on the bearing housing face for the unloader mechanism.

The oil lubricating the main busing enters an oil hole in the crankshaft after passing through the crankshaft oil channel. A portion of the passing through the crankshaft lubricates the crank pins while another portion of the oil sprays on the inner walls of the cylinders, the connecting rod small ends and the pistons to achieve lubrication and cooling.

Oil passing through the shaft lubricates the shaft seal side main bushing, and then flows through the oil pressure control valve and finally branches to the shaft seal and the oil reservoir. Oil entering the shaft seal block returns to the oil reservoir via a hole in the top of the seal block

Oil flowing via the lubrication groove of the bearing housing flange face enters the unloader cover solenoid valve through a hole in the crankcase.

When the solenoid valve is turned on, the lubricating oil enters the unloader cylinder and pushes the unloader piston to let it in the loaded status. Once the valve enters in the loaded status, the oil will not flow further and keeps it in position with the hydraulic pressure only.

When the solenoid valve is turned off, the supply of oil is stopped and the hydraulic pressure so far applied to the unloader piston becomes equal to that in the crankcase, thus the oil in the cylinder is pushed out by the spring force, resulting in the unloaded status.

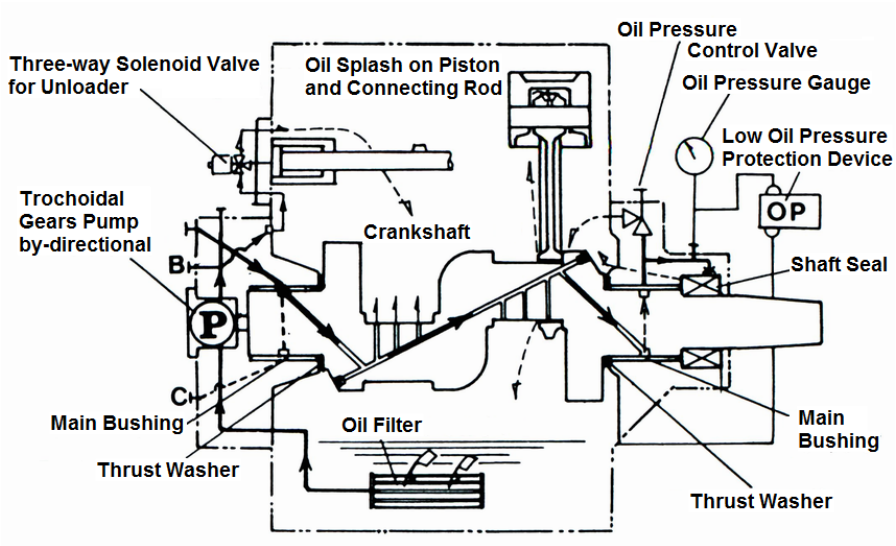

Figure 2-14 Oil Supply Route

2.4.4.2 Oil Cooler

■ **In the case of ammonia refrigerant specifications**

K-series ammonia compressor must be installed with an oil cooler which is a water cooling type, refrigerant cooling type or a direct expansion cooling type. Otherwise, lubricating oil temperature exceeds the service limit, will cause poor lubricating performance, and cause the crankshaft, main bushing and/or piston, cylinder sleeve to fuse etc.

The standard oil cooler of ammonia refrigerant specifications is water cooling shell-tube type.
In addition, there is a special type oil cooler according to specifications, i.e., ammonia direct expansion type oil cooler.

Piping diagram is, therefore, to be changed according to the type of oil cooler.

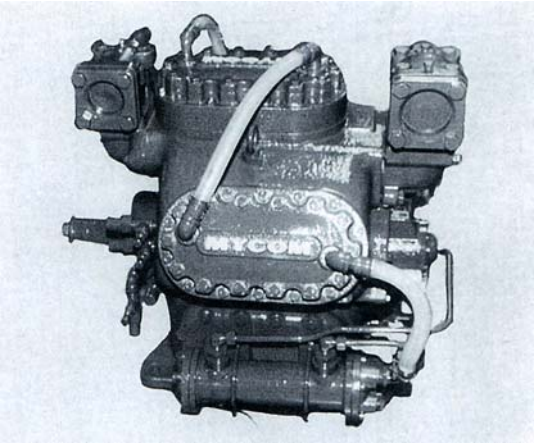

Appearance of N6K (example)

■ **In the case of installing an oil cooler except ammonia refrigerant specifications**

In this case, oil flow to the bearing housing has to be changed.

In the case of ammonia refrigerant specifications, the following settings have been configured at shipment.

An internal blind plug and intake and discharge ports for the oil cooler are necessary, as shown in next page Figure 2-15 and Figure 2-16.

With an oil cooler is installed, lubricating oil supplied to the main bushing is returned to the oil cooler, where temperature is reduced. Oil from the cooler is supplied to the main bushing through another hole.

All other flow lines remain unchanged.

When modifying the compressor for use with an oil cooler an internal blind plug must always be fitted.

CAUTION
● **When installing an oil cooler, be sure to attach the Plug A always. If you forget it, lubricating oil does not flow to the oil cooler.**

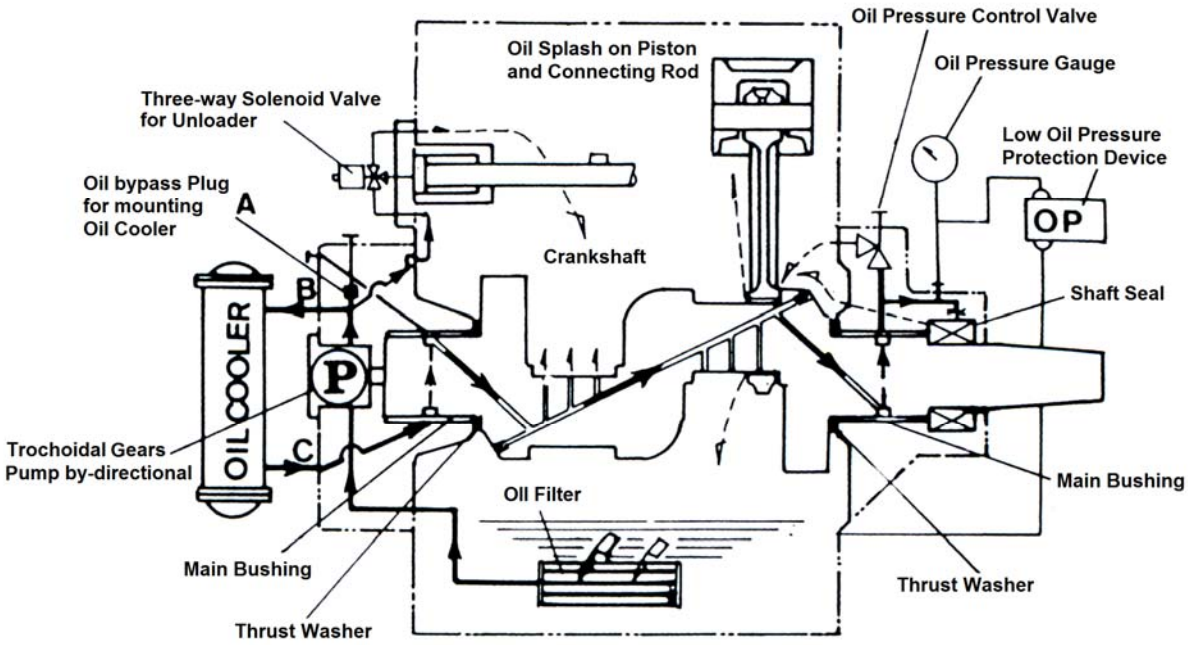

Figure 2-15 Oil Supply Route for Ammonia Refrigerant K-series Compressor

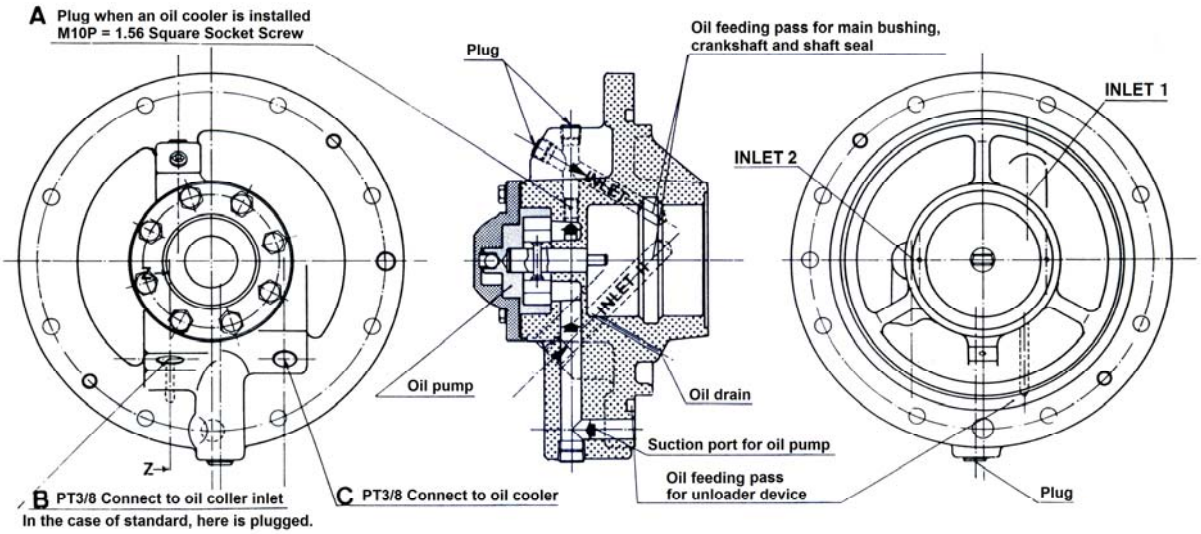

Figure 2-16 Oil Supply Route in the Bearing Housing

2.4.4.3 Lubricating Oil Amount

The amount of lubricating oil is checked at the oil sight glass. The standard is when the oil level is at the center of the sight glass. Replenish oil when the oil level becomes too low to be observed.

Table 2-3 Initial Amount of Lubricating Oil (Liters)

	2K	4K	6K	8K
Upper limit	9.4	10.7	10.7	12.0
Standard	8.0	9.0	9.0	10.0
Lower limit	6.6	7.3	7.3	8.0

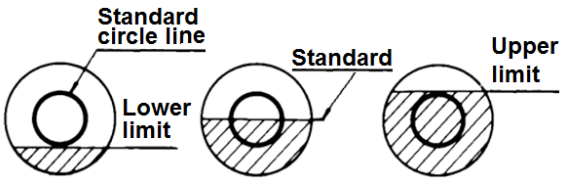

Figure 2-17 Oblique Sectional View of the Shaft Seal

2.4.5 Shaft Seal

Mechanical seals are used for the shaft seals for simple structure and high reliability.

The sliding surface of the seal is a compound of a special cast iron and carbon, and an O-ring is used for sealing.

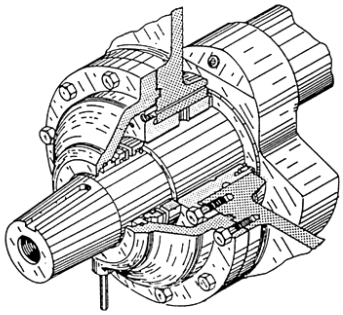

Figure 2-18 Oblique Sectional View of the Shaft Seal

2.4.6 Safety Valve

In the case of an internal built-in type safety valve specification compressor, the safety valve shown in Figure 2-19 is installed to contact from inside wall of the discharge side passage to the suction chamber. Internal built-in type safety valve is activated when the pressure difference between high pressure and suction pressure reaches 2.06 MPa or more.

In the case of ammonia refrigerant specifications, according to region, there is each specification of the external safety valve or internal built-in type safety valve.

In the case of external safety valve specifications compressor, installing portion for an internal built-in type safety valve has been stopped by a plug.

CAUTION

- **External safety valve specifications compressor has not been installed with the safety valve at compressor shipment. In this case, at the time of building your compressor package unit, be sure to install a safety valve between the compressor and the discharge stop (service) valve.**

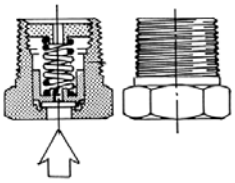

Figure 2-19 Internal Built-in type Safety Valve

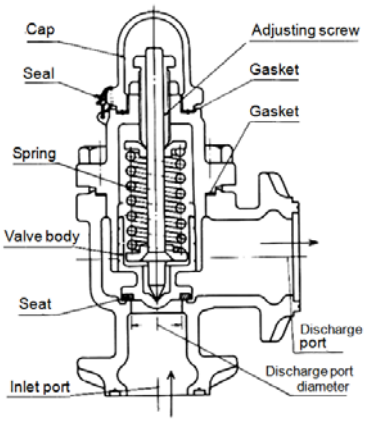

Figure 2-20 External Installing type Safety Valve

2.4.7 Shape of the Shaft End

The end of the compressor crankshaft is tapered and has a key groove on it.

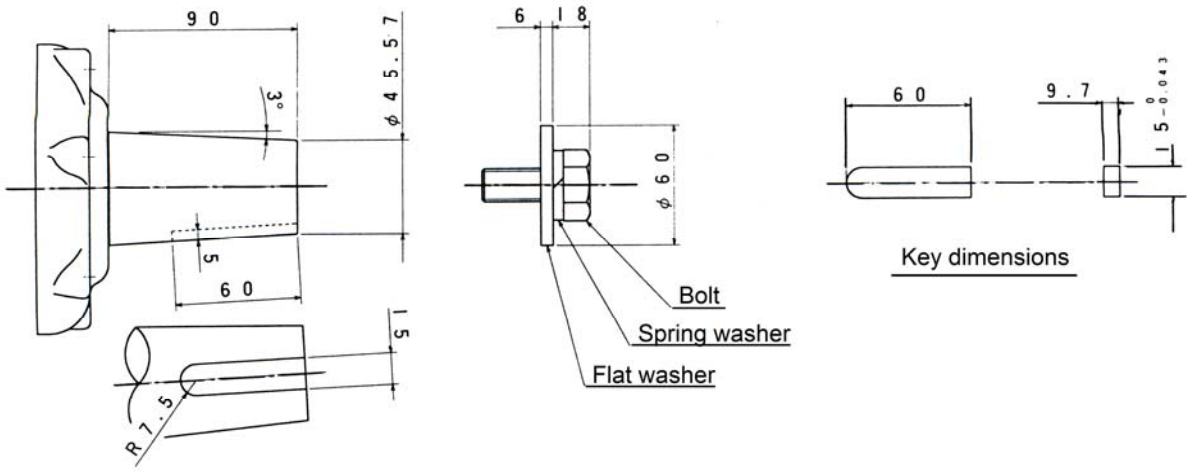

Figure 2-21 Dimensions of the Shaft End

2.4.8 Connection with the Drive Unit

2.4.8.1 Direct Coupling Drive

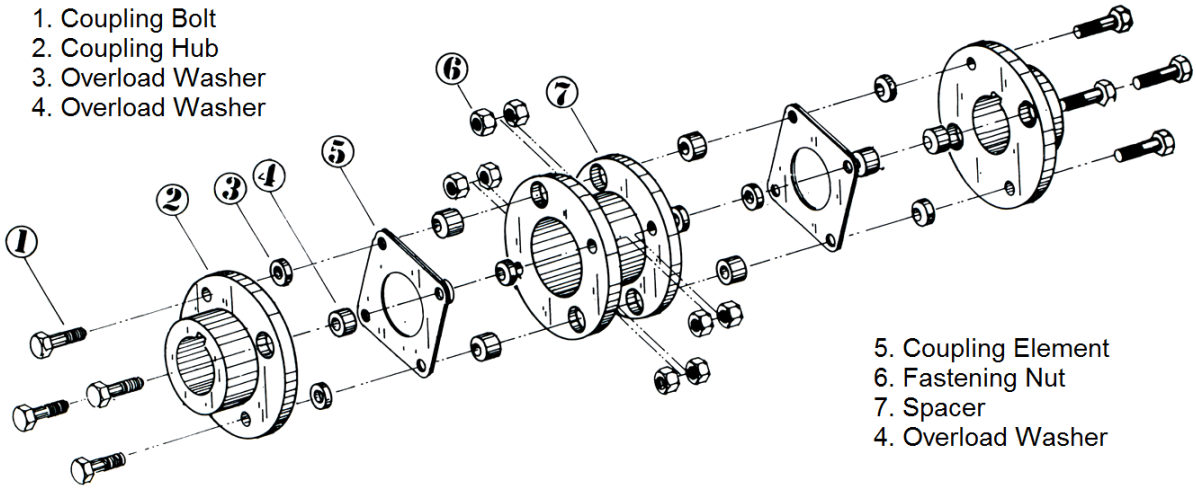

Figure 2-22 Development View of the Direct Coupling

With the direct driven K-series models, the form flex, double flexible coupling A4-40-PN-139.7 is commonly used as a standard.

The form flex, double flexible coupling consists of of coupling hubs, a spacer and a laminated flexible disk referred to as the "element."

Use of the double flexing type of coupler allows form inspection of the compressor shaft seal without removing the motor.

2.4.8.2 V-belts drive

With the V-belts drive models, the grooved pulleys type 5V for narrow V-belts 5V (conforming to JIS B 1855) and narrow V-belts type 5V for power transmission are employed as a standard.

Number of V-belts: 2K uses two belts and 4K, 6K, 8K use five belts.
As for the criteria of the deflection and the tension load, refer to Section 3.2.6 in this manual Chapter 3.

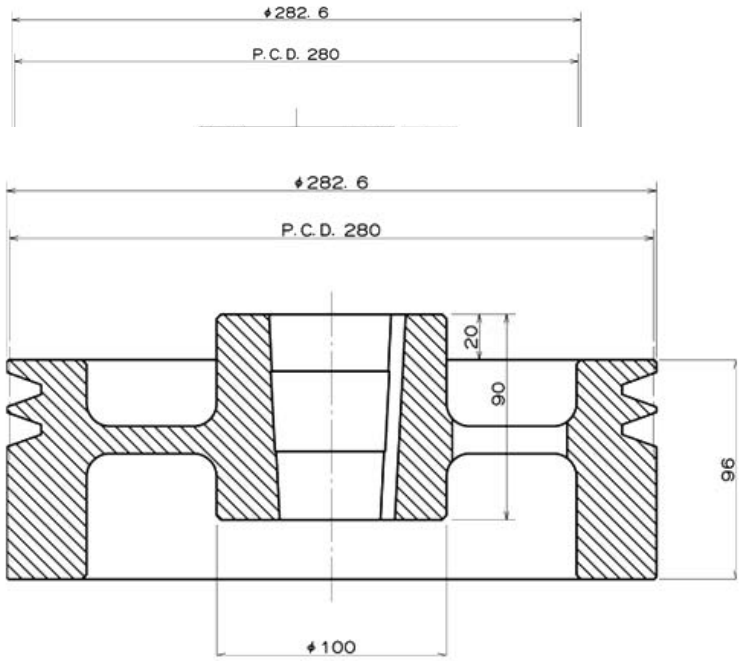

Figure 2-22 V-pulley Dimension for 2K (Unit: mm)

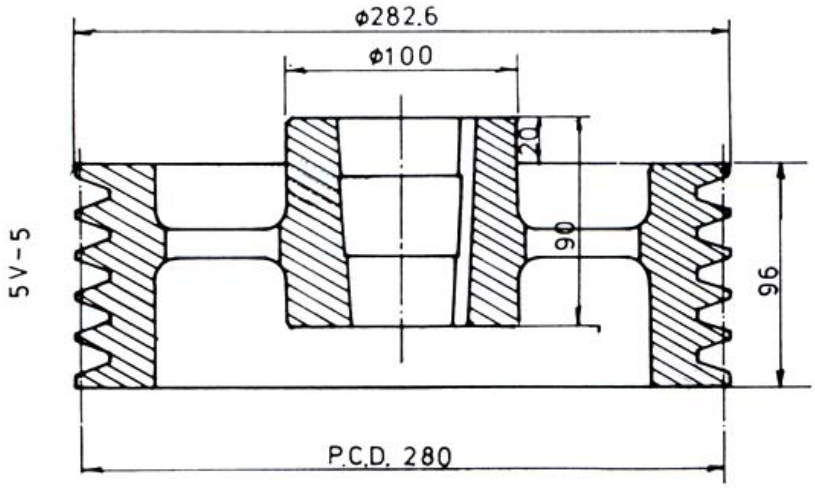

Figure 2-23 V-pulley Dimension for 4K, 6k, 8k (Unit: mm)

Chapter 3 Installation

3.1 General Precautions during Installation

【NOTE】

- The description in this Chapter 3 "Installation" assumes that the compressor is to be installed in a generic and commonly used refrigeration, cold storage, or air conditioning system.
  If the installation procedures described in this chapter are not directly applicable to the customer's specific refrigeration, cold storage, or air conditioning system, the customer is requested to prepare a separate work procedure document by paying sufficient attention to the safety issues and by referring to the relevant descriptions in this chapter, before actually performing the installation work. For any unclear issues, please contact our local sales offices or service centers.

- It may be required that the compressor installation work be done by a qualified technician.
  The work must be performed by technicians who have been qualified for the work according to the applicable laws, regulations, and other regulatory requirements in the country the compressor has been delivered to.
- Carefully read and sufficiently understand the content of this chapter and other related materials before actually performing the installation work.
- Any electrical work must be performed by a qualified electrical technician.
- Never get into or put any part of your body into an area immediately below the compressor being lifted up.

3.2 Installation Work

3.2.1 Unpacking

Check that the compressor is free from any damage or abnormality.

【NOTE】

- If there is any abnormality or missing part with the compressor, please contact our local sales offices or service centers.
- All packing materials that are no more needed after unpacking must be disposed of in a carefully controlled manner in accordance with the applicable laws, regulations, and any voluntary regulations of the customer

3.2.2 Storage

If the compressor is to be stored before the installation:

- Keep it indoors, and
- Fill the compressor with Nitrogen gas and seal it (at the gauge pressure of approximately 0.15 MPa).

【NOTE】

- Upon packing, the compressor is filled with Nitrogen gas to prevent rust.

3.2.3 Transportation

DANGER

- **Should the compressor being lifted drop, there is a high risk of death or severe injury. Provide sufficient protection such that no one can enter an area below a compressor being lifted up.**

For the mass of the compressor, refer to Table 2-1 "Standard Specifications of the K-series Compressors" in this manual Section 2.3.1 Chapter 2.

For the outer dimensions, refer to Section 2.3.3 "Outer Dimensions" in this manual Chapter 2.

1. When lifting the compressor, be sure to prepare and use lifting devices and other proper tools capable of lifting the compressor mass within the specified safety load limit.
2. A sufficient space must be provided to ensure that the lifting work can be safely conducted.
3. Make sure to check the wire ropes before use. Carefully check the wire ropes for any kink, knot, or broken strand. Never perform the lifting work before it has been confirmed that the wire ropes have no problems. If any doubt remains, ask a qualified specialist to check the condition.
4. If only the compressor body is to be lifted, use the eye bolts on the compressor to hook the wire ropes.
5. If the base structure with motor and the compressor to be lifted, use the eye bolts on the compressor and the base structure to hook the wire ropes. Never use the eye bolts on the motor.
6. Check that the transportation path is free from any obstacles that can hinder smooth transport, according to the size of the compressor.
7. Before lifting the compressor, check that the hook is positioned above the center of gravity of the compressor.
8. Before starting to lift up the compressor, instruct all the workers to be sufficiently away from the lifting area.
9. Just before starting to lift up, provide the coworkers with a sign (such as a call, hand signal, etc.) of starting the lifting action. Do not start to lift up unless the sign (such as a call, hand signal, etc.) has been fully acknowledged.
10. Wind up the wire ropes slowly until shortly before the compressor leaves from the ground.
11. Wind up the wire ropes again until the compressor leaves the ground, and check that the compressor is not tilted. If it is tilted, return the compressor to the ground and correct the tilt. After that, restart the lifting operation.
12. Slowly lift up the compressor. A sudden lifting may cause damage to the wire ropes and/or other hoisting tools or some part of the compressor.
13. After the hoisting has started, check the condition to see that the wire ropes and other hoisting tools are in normal condition. Check that the compressor is not tilted.
14. When moving the compressor in the lifted condition, be sure to use guiding ropes.
15. Evacuate people from the forward path and check the safety in the direction of the movement.
16. Unless it is inevitable, do not bring the compressor above any safety passage.
17. Do not place the compressor on a safety passage. The safety passages shall always be kept unblocked.
18. Before lifting down the compressor, clear the area from any obstacles. Make sure the compressor will not be tilted or become unstable.
19. When lowering the compressor, also notify the coworkers around the working area.
20. Be sure to carefully and gradually lower the compressor (unit) so that it is not damaged by impact on the ground.
21. If the compressor body is to be placed on two or more blocks, properly adjust the height of each block for the compressor to be stably leveled on the blocks.

3.2.4 Preparation for Installation

■ Installation space

Prepare an installation space where the operation, cleaning, maintenance, and inspection work can be easily performed by referring to the relevant figures in Chapter 2, Section 2.3.3 "Outer Dimensions" of this manual.

Because the crankshaft must be taken out from the main body during an overhaul work, a sufficient space must be provided on the bearing head side, for a length corresponding to the full width of the crankshaft, as measured from the crankcase end. Also on the opposite bearing housing side, a space of more than 60% of the full crankshaft length shall be provided.

In addition, along the direction of taking out the cylinders, a clearance of at least 300 mm shall be provided to avoid interference with other components such as pipes.

■ Lighting

Provide sufficient lighting to allow easy operation, cleaning, maintenance, and inspection work.

■ Ventilation

If natural ventilation is not sufficient, install proper ventilation fans according to the laws and regulations.

■ Cooling water

Ensure that a sufficient amount of cooling water is provided as required by the customer's system.

■ Piping

Refer to the relevant figures in Chapter 2, Section 2.3.3 "Outer Dimensions" of this manual.

3.2.5 Installation

3.2.5.1 Placement

Make sure that the compressor mounting surface of the package unit is sufficiently flat and level. If it is not sufficiently leveled, tightly fastening the compressor mounting bolts can cause deformation of the compressor and could hinder normal operation.

3.2.5.2 Oil Separator

The gas discharged from the compressor contains oil mist together with the refrigerant gas. To separate the oil from the refrigerant gas, install an oil separator.

Use a float valve for the return oil.

Connect a pipe to the compressor suction chamber or the crank chamber in order to return lubricating oil from the float valve to the compressor.

Confirm the oil return connection port by referring to the relevant figures in Section 2.3.3 "Outer Dimensions".

Oil return connection port is described as "Suction Pressure Plug" or "Oil Chamber Plug".

Do not return oil from the receiver.

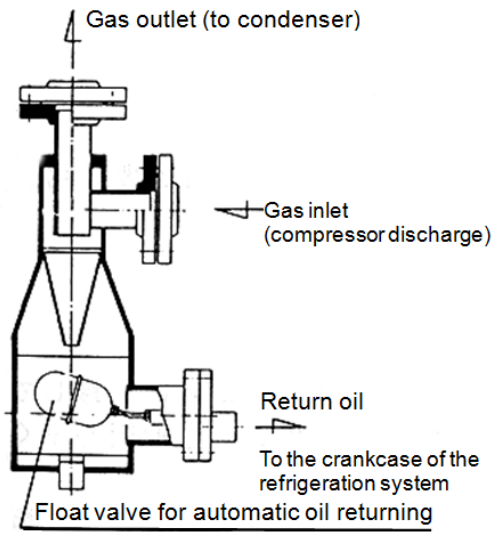

Figure 3-1 Oil Separator (example)

3.2.5.3 Protection Devices

To protect the compressor and prevent accidents, be sure to install the devices described in Section 1.4.5 "Automatic Control and Protection Devices for the Compressor" in this manual Chapter 1.

3.2.5.4 Oil Cooler

K-series compressor of fluorocarbon refrigerant specifications and propane refrigerant specifications, no oil cooler is the standard specification.
In the case of installing an oil cooler to your K-series compressor package unit after compressor is shipped as standard specifications and/or compressor operation, etc., it is necessary to change the oil passage in the bearing housing in order to let the oil flow through the oil cooler lines. For details, refer to Section 2.4.4.2 in this manual Chapter 2.

If there is a certain volume of heat exchange, any of the following is acceptable to oil coolers; water cooling type, air-cooling type and refrigerant cooling type.

In the case of using the water cooling type oil cooler by automatic operation, provide a solenoid valve to prevent water flow when the compressor operation is stopped. If water flow is maintained while the compressor is not in operation, the refrigerant in the compressor can condense, and as a result, it can cause increased oil consumption, valve damage, seizure of cylinders/pistons and/or stuck crankshaft/main bushing.

3.2.5.5 Piping

The vibration of the compressor will be transmitted to the building via the base structure and the pipelines. Be careful about the installation of piping supports to prevent possible resonance of the building.

■ Refrigerant piping

Be careful about the following points in connecting the refrigerant pipe line:

- The compressor is one of a few components that have movable parts in the target system. Such movable parts are vulnerable to dust, dirt, and other foreign matters. Be careful during the plumbing work not to put scales and other foreign matters inside the compressor.
- Some compressors (mainly the ones to be shipped overseas) are filled with Nitrogen gas to prevent rust. Therefore, do not open the cover flanges or the suction/discharge stop valves until it is needed to do so.
- There must be no moisture in the piping system. Any moisture inside can cause troubles after the operation has started. Be sure to connect pipes in dry condition.
- Improper work on the suction gas piping can cause problems such as no oil return to the compressor and oil compression.
- When connecting a pipe to the compressor, be sure to use the same pipe size as that of the compressor. If the size of the connecting pipe is smaller than that of the compressor, the flow of the oil or refrigerant is impeded and can cause problems.
- Every connecting pipe must have a support for not to apply excess stress to the compressor. Also, if vibration isolators are used for the base, the piping system must use suitable flexible tubes.
- To prevent dew condensation on piping, the possible pipes must be isolated and thermally insulated.

3.2.6 Shaft Alignment between the Compressor and Driving Machine (V-belts)

CAUTION

- **If any V-belt is to be replaced by a new one, replace all the V-belts together as a set, by procuring a set of V-belts. Also, if new and old belts are mixed together, it can cause abnormal vibration due to the different levels of wear.**
- **Even if the nominal dimension is the same, the length may vary to some extent. In such a case, the force may be applied only on the shortest one, and it can damage the belt or cause abnormal vibration.**
- **The V-belts must be kept free from oil or grease. Wipe out any oil or grease if attached.**

【NOTE】

- Although the V-belts are tensioned to the specified initial tension at factory shipment of the belt unit, initial elongation before they are actually used for operation may result in the tension less than the minimum tension load. Be sure to check the tension load after the installation, and adjust it to the correct tension load for a new belt before starting the operation.

3.2.6.1 Alignment Method and Criteria

Check that the centerline of the compressor shaft and that of the motor shaft are exactly parallel with each other by using a stretched string from the side of the flywheel to the side of the motor pulley.
If they are misaligned, the high speed rotation accelerates the wear of belts, applies excessive stress on the bearings, and shortens the service life of the compressor and the motor.

Alignment criteria: L = 1mm max.

Figure 3-2 Alignment Criteria

3.2.6.2 Belt Tensioning

Loosen the slide base of the motor to get the pulleys of the compressor and motor closer, and place the V-belts into their slots in the loosened state. After checking that the V-belts are correctly placed into the V-grooves, apply tension to the belts by pulling the motor by fastening the bolt.

Deflection = 0.016 × span length (mm) (span length ≒ wheelbase)

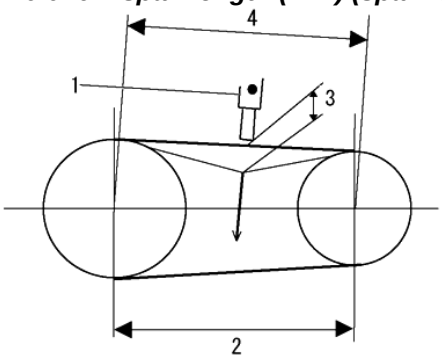

1: Tension meter
2: Wheelbase
3: Deflection
4: Span length

Figure 3-3 Deflection

Table 3-1 Quick Reference for the Deflection (mm)

V-belt type	Wheelbase					
	650	700	750	800	850	900
Narrow V-belts for power transmission (JIS K 6368)	10.4	11.2	12.0	12.8	13.6	14.4

Table 3-2 Quick Reference for Tension Load (N per belt)

V-belt type	New belt	Re-tensioning	Minimum tension load
Narrow V-belts for power transmission (JIS K 6368)	80 to 90	65 to 75	60 or more

Note 1: The first re-tensioning shall be made 2 to 3 hours after the operation has started.

Note 2: To check the tensioning of the V- belts, rotate the V-pulley to check the tension load.

Note 3: When the minimum tension load is used, as it varies with the load condition, make sure that the belts do not act violently during operation.

Note4: The re-tensioning after one year's operation shall be 60 N or more per belt.

【NOTE】

- When new belts are used for two to three hours for the first time, the initial elongation, initial friction, and removal of V-pulley paint will significantly reduce the tension load of them, to result in a load less than the minimum tension load. If the use of the V-belts is continued in this condition, not only the slippage of V-belts can reduce the service life of the belts but also can the belts act violently, turn over due to one-sided wear, disengage, or cause other problems. Be sure to re-tension the belts after the commission.
- Insufficient tension will reduce the service life of the belts. If the belts are replaced by new ones, check the tension again after they have been used for 24 to 48 hours.

3.2.7 Shaft Alignment between the Compressor and Driving Machine (Direct Drive)

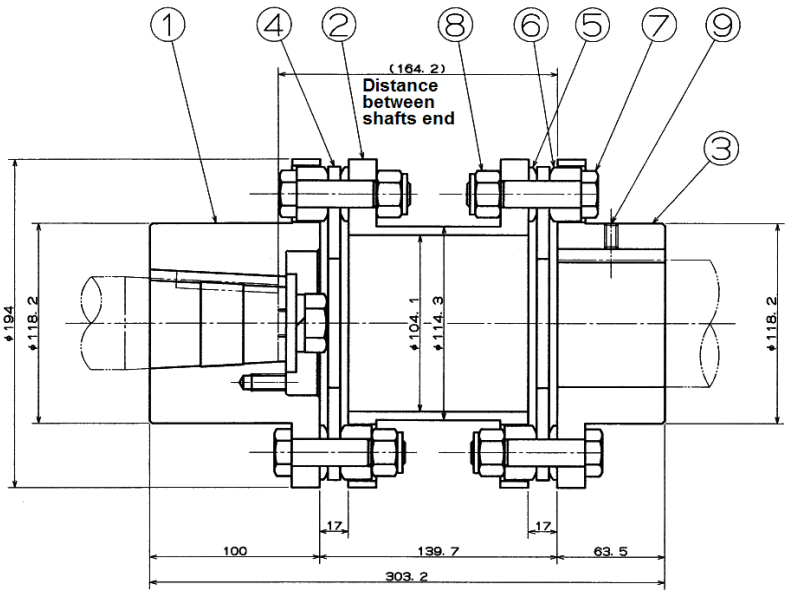

P/N	Part Name	Qty
1	Hub (Compressor side)	1
2	Spacer	1
3	Hub (Motor side)	1
4	Element	2
5	Overload Washer (short)	8
6	Overload Washer (long)	8
7	Fastening Bolt	8
8	Nut	8
9	Set Screw	1

Figure 3-4 Sectional View of Direct Coupling

In the case of a direct drive, adjust the shaft alignment between the compressor and the driving machine to within the allowable limit given in the table 3-3.

Table 3-3 Allowable Misalignment

	Allowable limit
Offset	6/100 mm
Angularity	3/100 mm (referenced to 100 mm diameter)

In the case of standard coupling A4-40-PN-139.7, the face-to-face distance of the hub should be 139.7 ± 0.25 mm and tightening torque of the coupling set bolts should be 160 N·m. Be careful not to fasten the bolts excessively, which may bent the coupling element, causing an abnormal noise during the operation.

The fastening nut comes with a nylon lock bushing to prevent loosening. Since the loosening prevention will diminishes through repeated detaching and attaching of the coupling, avoid detaching and attaching the locking nut over 10 times. For further detaching and attaching, replace the locking nut for a new one.

The coupling comes with a chamfered thick washer and a thin washer. Mount the washer so that its chamfered side faces the coupling element.

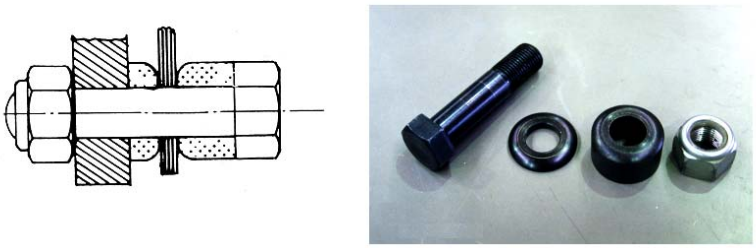

Figure 3-5 Coupling Set Bolt

The Figures 3-6 and 3-7 are the images of measurement of the eccentricity and deflection angle using the dedicated hub, dial gauge and magnet stand.

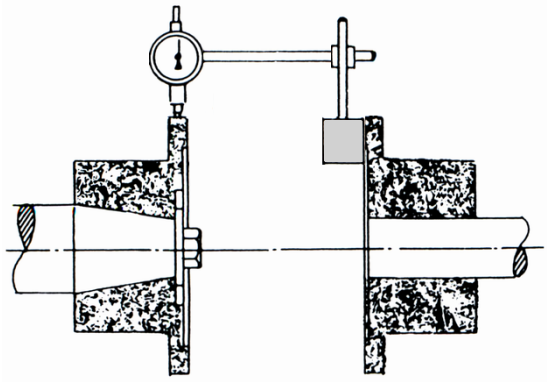

Figure 3-6 Measuring the Shaft Offset

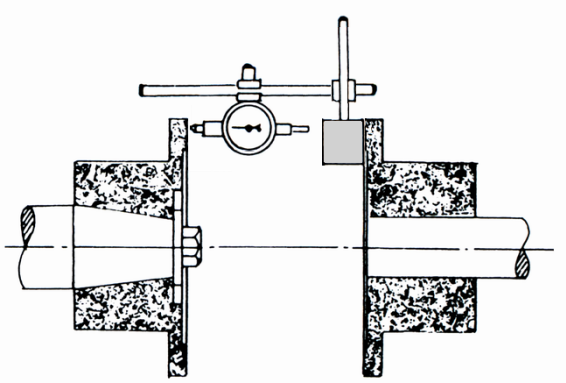

Figure 3-7 Measuring the Shaft Angularity

3.2.8 Initial Charge

3.2.8.1 Lubricating Oil

Perform initial charge of the lubricating oil before starting the commissioning.

Charge the lubricating oil from the "OIL SUPPLY & DRAIN VALVE" indicated in Section 2.3.3 "Outer Dimensions" in this manual Chapter 2.

Generally producing a vacuum after air tightness test, charge the lubricating oil at the same time. Besides that, there is a way to charge the lubricating oil by applying pressure using a pump.

Depending on the use refrigerant and equipment configuration of your package unit, specify the work method and procedure, please conduct the lubricating oil charging work accordingly.

Be careful that air and water are not mixed in when charging the oil.

3.2.8.2 Refrigerant

Depending on the use refrigerant and equipment configuration of your package unit, specify the work procedure that considered safety enough, and conduct the refrigerant filling work accordingly.

3.2.9 Checkout after Installation

The customer is requested to develop its own checklist and checkout procedures appropriate to the customer's own refrigeration, cold storage, or air conditioning system, by using the following summary descriptions on the inspection items to be checked after installation of the compressor as a reference material.

■ **Wiring for the automatic control**

- Wiring between the control panel and switches
- Motor startup method (automatic/semi-automatic) and direction of rotation
- Insulation resistance of the motor

■ **Operational test for protection devices**

Conduct the operational test of the protection devices by referring to Section 1.4.5 "Automatic Control and Protection Devices for the Compressor."

■ **Airtightness test and refrigerant leak test**

The customer is requested to conduct the airtightness test and refrigerant leak test for the system.

DANGER

- **Never use oxygen or flammable gas for the airtightness test. Otherwise, there is a risk of explosion.**
- **Do not compress air using this product. Otherwise, there is a risk of explosion.**

CAUTION

- **If carbon dioxide is used for the air tightness test of a compressor that use ammonia as the refrigerant, it may result in the deposition of ammonium carbonate, and it can cause a failure.**

Chapter 4 Operation of Compressor and System

4.1 Lubricating Oil (Refrigerant Oil)

The lubricating oil is mainly used for lubricating the moving/sliding members of the compressor, preventing abnormal wear, and cooling each section. For this, the following properties are required for the oil:

- An appropriate viscosity is maintained within the operating temperature and pressure ranges.
- The liquidity is maintained even under extreme low temperature conditions (within the operating temperature range of the refrigerating system).
- It is chemically stable and will not corrode or change the quality of the components used (such as metals or rubbers).
- The wax component will not be separated even under low temperature conditions.
- Sludge and carbon are not easily generated even under high temperature conditions.
- Water is not contained.

4.1.1 Precautions for Selecting the Lubricating oil

- The type (brand) of the lubricating oil depends on the refrigerant to be used. For details, contact one of our sales offices or service centers.
- For NH_3 refrigerant, do not use polyol ester (POE) or Poly alpha olefin (PAO).
- Mineral oils as specified in ISO–VG 46 to 68 are recommended.
  As the minimum requirement, the required viscosity shall be ensured for the oils supplied to sliding members. If any lubricating oil that can absorb a significant amount of refrigerant (inter-soluble oil) is used, the viscosity under the operating conditions may significantly be reduced from that specified in the product specification. Select the lubricating oil that can maintain the viscosity of 20 to 70 mm^2/s under normal operating conditions.
- Take into account the circulation of the lubricating oil in the entire system. After lubricating and cooling the various sections of the compressor, the lubricating oil will mostly return to the oil receiver of the crank case. However, some part of the lubricating oil will be discharged together with the refrigerant. While the oil discharged from the compressor will mostly be captured by the oil separator and returned to the compressor, some part will be sent to the condenser and evaporator. As such, the lubricating oil is required to maintain a sufficient liquidity and stability in the various types of components with varying temperature range.

4.1.2 Changing the Brand of the Lubricating oil

- When the brand of the lubricating oil used is changed, mixing of the old and new oils can cause unexpected problems. Pay sufficient attention when you are to change the lubricating oil.
- If the manufacturers are different, contact both of them to check if there is no problem. Even if the manufacturer is the same, similar confirmation is required when the brand name of the lubricating oil is to be changed.
- There is no problem in changing the viscosity grade within the same brand. However, the viscosity grade after the change must be suitable to the operation.

4.1.3 Management Criteria of the Lubricating Oil

Lubricating oils are classified into the following categories and different criteria are applied to each category.

■ Mineral oil (naphthenic oil) and synthetic oil (alkylbenzene [AB], polyalphaolefine [PAO])
■ Inter-soluble synthetic oils for NH_3 refrigerant: Polyalkylene Glycols (PAG)

- **Oil sampling and analysis is recommended every six months.**
- **If the following management criteria are not satisfied, replace the oil.**
  * Note that the water content of PAG shall be excluded from the above oil replacement criteria. Refer to the note *2 in the table below.

The analysis items and the criteria are shown in the following tables.
Note that these criteria may be changed without notice according to actual results.

Table 4-1 Synthetic Oil Compatible with NH_3 Refrigerant: Polyalkylene Glycols (PAG) *1

Item	Criteria
Color phase	ASTM color scale: 4.0 or less
Total acid value	0.1 mg·KOH/g or less
Kinetic viscosity	Within ±15% in variation when compared with fresh oil
Water content	2000 mass ppm or less ***2**
Degree of contamination	Degree of contamination measured by mass method (millipore value) shall be 25 mg/100 mL or less.

Table 4-2 Mineral Oil (Naphthenic Oil) and Synthetic Oil (Alkylbenzene [AB], Polyalphaolefine [PAO])

Item	Criteria
Color phase	ASTM color scale: 6.0 or less
Total acid value	0.3 mg·KOH/g or less
Kinetic viscosity	Within ±15% in variation when compared with fresh oil
Water content	100 mass ppm or less
Degree of contamination	Degree of contamination measured by mass method (Millipore value) shall be 25 mg/100 mL or less.

***1** When NH_3 refrigerant is used with PAG, the inside of the equipment can be easily rusted due to water absorption. Furthermore, as PAG has a higher cleaning effect than conventional mineral oils, the rust developed in the equipment can be easily carried to the compressor, to make the degree of contamination higher during the initial phase of operation. As such, it is recommended to replace the oil with new oil, after 2,000 to 3,000 hours of operation. To prevent possible absorption of water during oil charge, rainy days should be avoided. Complete charging within 15 minutes after the pail can is opened.

***2** This value is only for reference purposes, due to possible water absorption during the sampling, as the oil has high water absorption characteristic. Also, in the case of NH_3 refrigerant, NH_3 may be detected as water. If this limit is repeatedly exceeded in two or more samplings, it should be judged that it does not satisfy the management criteria.

4.1.4 Lubricating Oil Replacement Timing

4.1.4.1 After Starting the Initial Operation

As the oil can easily be contaminated and degraded relatively quickly during the initial operation due to scales and deposits remaining in piping and vessels, replace the oil after 100 hours of operation.

Furthermore after 300 hours and after 700 hours, replace or to analyze the lubricating oil.

When analyzing, if it is found as a result of the analysis that the management criteria given in Table 4-1 or 4-2 are not satisfied, the oil must be replaced.

In addition, the summary is shown in Table 4-3 in this Chapter Section 4.2.2, for the lubricating oil replacement timing including the time of installation and commissioning.

4.1.4.2 During Normal Operation

Lubricating oil degrades gradually as the system is operated over time.

The rate of degradation depends on the operating condition, type of oil and amount of foreign matters and moisture contained in the oil.

Manage the timing of lubricating oil replacement during normal operation by any of the following.

- Sample and analyze the lubricating oil every six months. If it is found as a result of the analysis that the management criteria given in Table 4-1 or 4-2 are not satisfied, the oil must be replaced.
- When inspecting and cleaning the oil filter every 1000 hours, replace the lubricating oil together.

We recommend oil analyze because that is as effective to understand the condition of the package unit.

When analyzing, if it is found as a result of the analysis that the management criteria given in Table 4-1 or 4-2 are not satisfied, the oil must be replaced.

If the oil filters are frequently clogged or the oil color quickly becomes darker and unclear, replace the oil after removing the cause of the problem.

In addition, replace the oil every time the compressor is overhauled.

4.1.5 Replenishment of Lubricating oil

The oil level will gradually become lower as the operation is continued. Supply additional oil according to the following procedures while the oil level can still be checked at the oil sight glass. For the decision regarding the amount of oil, refer to Section 2.4.4.3 "Lubricating Oil Amount" in this manual Chapter 2.

CAUTION
● **When replenishing the lubricating oil, prevent air and moisture from entering the oil.** ● **The lubricating oil to be replenished must be clean, with no contamination.** ● **To prevent bubbling inside the crank case, be sure to slowly and gradually supply the oil.** ● **The lubricating oil must be stored under sealed conditions until it is used, for not to absorb moisture in the air.**

■ How to supply oil while in operation (example)

a) Attach the charge hose to the oil supply and drain valve, and put the end of the hose into the container of new oil. Then, slightly open the valve to purge the air inside the hose using the gas pressure in the compressor.

b) Gradually close the suction stop valve of the compressor to the point the suction pressure is only slightly vacuum pressure (approximately -0.026 MPa).

c) Gradually open the oil supply and drain valve to gradually suck the oil.

d) After the required amount of oil has been supplied, securely close the oil supply and drain valve.

e) Gradually open the suction stop valve to resume the steady operation.

4.2 Initial Operation

4.2.1 Precautions for Initial Operation

DANGER

- **Check the open/close status of each valve before operation. In particular, operating the compressor with the high pressure side valves closed carries a risk that it may cause a rupture. Also, if the valves that connect to various protection devices are closed, the protection devices will not operate properly.**
- **Be sure to fully open the source valve of safety valves at all times, except when the safety valves are to be inspected.**
- **Before operation, the belt (coupling) guard must be attached. Operating the compressor without installing the belt (coupling) guard carries a risk that the operator could be caught in rotating parts to result in severe personal injury or death.**
- **Ensure that sufficient safety measures are in place when operating valves or conducting inspection with the compressor running. While the compressor is running, there are all sorts of risks including death, severe injury, minor injury, electric shock, burn, and so on.**

The refrigerant system installed must be operated for a long time maintaining the initial functions. For this, the initial operation has an important significance.

Within 24 hours after starting the initial operation, dust, scale, rust, sand, and other foreign matters in the pipe system tend to be collected in the compressor being carried by the flow of refrigerant gas. Tiny foreign matters not captured by the suction strainer or scale trap will be mixed in the oil and can cause a failure or abnormal wear.

While sucking of foreign matters into the compressor lasts for a long time during operation, the amount of such matters is the largest during this initial period of operation.

Check the existence of foreign matters by inspecting the suction strainer and also by checking the contamination of the lubricating oil.

As the condition of the oil in the crank case should indicate the state of contamination in the refrigerant system, you can determine that the inside of the system is clean if the oil in the crank case is kept clean and clear for a long period of time. If the oil is dark or impure dark brown, some foreign matters in the system are contaminating the oil. In such a case, be sure to change the oil as soon as possible to prevent foreign matters from entering the sliding/moving parts of the compressor.

In particular, check for any abnormal overheating or abnormal noise in the compressor.

【NOTE】

- When cleaning the oil filter and suction filter, it is necessary to properly process the refrigerant and to open the compressor. For the processing of the refrigerant and compressor disassembly/assembly procedures, refer to Chapter 5, "Maintenance and Inspection" in this manual.

4.2.2 Initial Operation Method

CAUTION

- **If the compressor to be used has been in storage for a long time, i.e., more than one year after the delivery, be sure to open each head cover, hand hole cover, and seal cover to check the inside. At that time, supply sufficient oil to the opened parts and change the O-ring of mechanical seal.**

a) Before running the compressor, perform manual turn or inching (short run of 1 or 2 seconds) few times to check that the oil pressure gauge is operational. Also check at the sight grass that the oil level is slightly lowered at the same time.

b) Operate the compressor.

c) Perform the initial operation following the Table 4-1 "Guidelines for Oil Replacement and Filters Inspection".

Table 4-3 Guidelines for Oil Replacement and Filters Inspection

Elapsed time	Replacement of oil and cleaning of oil filter	Cleaning of suction filter
After completion of refrigerant charging operation	○	△
After completion of commissioning	○	○
100 hours after starting operation	○	○
300 hours after starting operation	○	○
700 hours after starting operation	○	○
Each 1000 hours operation	○	○
NOTE: If contamination of the lubricating oil or clogging of the filter is found, perform oil replacement or inspection/cleaning regardless of the above guideline.		

○･･･Mandatory △･･･Inspection and cleaning is recommended.

4.3 Operating Precautions

4.3.1 Start/Stop Limits

For normal operation of the compressor, the start/stop limits, stop duration, and other requirements are specified as follows.

The start/stop times and stop duration are specified in order to prevent possible burning of electric circuits and components or overheating and seizure of the compressor cylinders.

Table 4-4 Specification for Start/Stop Times, Stop Duration, etc.

Item	Specified value	
	Water-cooled	Air-cooled
Number of start/stop cycles	4 times per hour or less	2 times per hour or less
Stop duration	15 minutes or more	30 minutes or more
Minimum operation time	15 minutes or more	
Number of unloader operations	5 times per hour or less	

4.3.2 Liquid Flow-Back Prevention

The "liquid flow-back" is a phenomenon when the refrigerant liquid reaches the compressor without being completely evaporated with the gas. The liquid flow-back phenomenon may cause insufficient lubrication of the compressor, generation of abnormal vibration and noise, and/or abnormal foaming of the lubricating oil (oil loss). To prevent liquid flow-back operation, properly adjust the expansion valve of each cooler.

4.3.3 Management of Daily Operation

This Section describes the points that have to be managed at the daily operation. Read this Section in conjunction with Chapter 2 Section 2.3.2 "Service Limits" in this manual.

4.3.3.1 Suction Pressure and Suction Temperature

It is recommended that suction pressure be maintained at saturation pressure corresponding to evaporative temperature. In actuality, there will be a slight pressure loss due to piping resistance.

If the pressure loss is excessive, the suction filter maybe clogged, in which case it should be cleaned.

Suction pressure and evaporative pressure (temperature) are determined when the system is designed.

If the system is operated at a suction pressure lower than the specified value, a considerable drop in refrigeration capacity will result. On the contrary, if suction pressure is higher than the specified value, refrigeration capacity will be improved but power consumption will increase and motor overload may result. In any case, maintaining the proper suction pressure is essential to long-term, economic operation. Under normal conditions the best suction temperature is:

Saturation temperature corresponding to suction pressure +5 to +10 °C (this means that the degree of superheat is 5 to 10 °C). If superheat of this level is secured, liquid back will not occur.

Operation with a much higher degree of superheat will result in an abnormal rise in discharge temperature, which will exert a harmful influence on operation.

4.3.3.2 Discharge Pressure and Discharge Temperature

"Condensing pressure + piping resistance" is the standard level of discharge pressure.

When the discharge pressure rises excessively, problems such as reduced refrigeration capacity and low efficiency due to increased power consumption result and the motor may be overloaded.

Abnormally high pressure may result from insufficient cooling water supply, contamination of the refrigerant gas with a non condensable gas (air) or low heat exchange efficiency. Symptoms such as these may change from momentarily so a careful record of operating conditions is essential.

On the contrary, if there is a decrease in discharge pressure (condensing pressure), refrigeration capacity will be increased and power consumption will be reduced. These phenomena are seemingly advantageous, but the operation will be unprofitable taking power consumption for the cooling water pump and the flow rate of the cooling water into consideration.

Discharge temperature will show some variations depending on the kind of refrigerant and the degree of suction gas super heat but do not allow the discharge temperature to increase higher than 120 °C (Fluorocarbon and propane) / 140 °C (Ammonia) as a rule.

If the discharge temperature is abnormally high, problems such as excessive super-heating of the suction gas and recompression super heat resulting from damaged discharge/suction plate valves are possible.

4.3.3.3 Lubricating Oil Supply Pressure

Proper oil pressure is: Suction pressure +0.2MPa to 0.3MPa.

A drop in oil pressure may be due to clogging of the oil filter or foaming of the oil in the crankcase (which often happens if a large quantity of liquid refrigerant is returned to the crankcase).

Abnormal wear or abrasion of the compressor moving parts may also cause a drop in pressure. In such case, pressure falls gradually and is apt not to be noticed immediately. For this reason, studying the system logbook regularly is essential for diagnosing potential abnormalities before serious trouble and damage are encountered.

4.3.3.4 Oil Amount (oil level)

Check the oil quantity using the oil level gauge (oil sight glass) to confirm that it is within the specified range. Refer to Section 2.4.4.3 "Lubricating Oil Amount" in this manual Chapter 2.

Usually, the oil level will gradually decline during initial operation. In this case, when oil cannot be seen in the gauge, charge oil to the specified level.

If refrigerant is mixed with the oil flowing into the crankcase, oil foaming will occur, resulting in an apparent increase in the oil level gauge reading. Take this into account during operation.

4.3.3.5 Lubricating Oil Temperature

The oil temperature will of course differ according to operating conditions but it should remain within the range between ambient temperature and 70 °C (Fluorocarbon and propane) as a rule. Operation which raises the temperature of the hand hole cover on the crankcase to over 65 °C should be avoided.

In the case of using ammonia refrigerant, keep 50 °C or less at oil cooler inlet.

4.3.3.6 Contaminated Oil

Under normal operating conditions the oil should remain transparent and clear. If the oil turns from brown to black, the quality has deteriorated or become contaminated and should be replaced.

Manage the lubricating oil according to Section 4.1.3 "Management Criteria of the Lubricating Oil ".

4.3.3.7 Shaft Seal Oil Leakage

Evaluate according to the amount of oil leaking from the seal. Oil leakage of 3 cc per hour is considered acceptable. Oil leakage up to 9 cc per hour is to be monitored with caution. If oil leakage is 9 cc or more per hour, it is necessary to overhaul of the shaft seal part.

4.3.3.8 Power Transfer Components

In the case of V-belts driven type, check belts tension carefully. Excessively tensioned belts may overload the bearings of the compressor and motor as well as cause premature belt wear.

Conversely, if the belts are too loose, heat and abrasion may result due to belt slippage. Improper tensioning will result in premature belt wear and abnormal vibration. Periodic adjustment of the V-belts is necessary.

In the case of a direct drive coupling type, check for abnormal sounds due to loose bolts.

Under normal operating conditions the sound generated by the compressor should be rhythmical.

4.3.3.9 Electric Motor

The electric current and voltage should be within the specified range and the bearing casing should remain at normal operating temperature.

Confirm the above based on the electric motor manufacturer's recommendations in the instruction manual of the motor..

4.3.3.10 Other Items

- **Temperature of Refrigerant Liquid Piping (During Normal Operation)**

  Under normal conditions, the refrigerant liquid pipe (from the receiver to the expansion valve should be warm to the touch.

  If the liquid pipe is hot, a considerable amount of gas is flowing through the pipe instead of liquid refrigerant due either to a malfunction of the condenser or insufficient refrigerant.

  Conversely, if the liquid pipe is too cold, the liquid has expanded in the piping due to an abnormal pressure drop resulting from a clogged dryer, improperly sized or twisted pipe or partial closure of a valve.

  In either case, investigate the cause of the malfunction, remedy and readjust the refrigerant flow rate to achieve normal operation.

■ Liquid Compression and Oil Compression

When a significant quantity of liquid refrigerant is sucked into a cylinder, the compressor will produce a clanking sound and the discharge pipe will become cold (because the discharge temperature is suddenly reduced).

This symptom is called "liquid compression" or "oil compression" and is very harmful to the compressor. The strong impact of the cylinder on the uncompressible liquid can possibly lead to serious damage or an accident.

If this system is encountered during operation, throttle or close the suction stop valve to stop the flow of liquid into the compressor and then adjust the expansion valve. When the liquid compression stops and the discharge pipe temperature rises, open the suction stop valve gradually to return to normal operation.

"Oil compression" is a similar symptom in which the oil level in the crankcase is excessively high. In this case, excess oil in the crankcase should be removed.

■ Refrigerant Leakage

Many pipe-fittings and flanges are used throughout the cooling system. These parts of the compressor subject to high pressure, high temperature or vibration may become loose and leak refrigerant. For this reason, periodic confirmation of the integrity of joints is necessary. Regularly inspect joints and retighten to the required torque if necessary.

■ Drop in Compressor Performance

The drop in compressor performance may be caused by leakage from or damage to a discharge or suction plate valve or leakage from around the piston rings.

Apart from the compressor, a similar decline in performance may be traceable to a leak from the safety valve or the oil separator return oil float valve.

■ Oil Consumption

Some of the oil used to lubricate the sliding parts of the compressor mixes with the refrigerant gas compressed in the cylinders and enters the condenser and receiver through the oil separator.

Most Fluorocarbon refrigeration systems utilize an oil separator equipped with an automatic oil return device. Oil is also returned from the evaporator.

While a considerable amount of oil is apparently consumed during initial operation of the system, this symptom decreases in time, that is to say, the quantity of oil returned from the evaporator and the actual consumption of oil tend to balance out closely and there is less need charging additional oil.

If the compressor is frequently started and stopped or operated under abnormal conditions which contribute to liquid back, oil foaming in the crankcase or abnormal oil consumption will occur.

Care must be taken because similar conditions will occur caused by the rapid change of the suction pressure.

4.4 When Stopping the Compressor for a Long Time

If the compressor is to be stopped for a long time, be sure to recover the refrigerant from the compressor, close the suction and discharge stop valves and shut off the main power to the motor, heater power, and power to the control panel.

If the inoperative period lasts for a month or longer, perform the following services once per month:

- Measure the pressure of the system;
- Check for any leak of refrigerant from each section of the system; and
- Turn the compressor shaft (at least 10 turns).

When the compressor package unit is to be operated after being inoperative for one year or longer, check for any refrigerant leak and replace the oil.

In addition, open each head cover, hand hole cover, and seal cover to check the inside. At that time, supply sufficient oil to the opened parts and change the O-ring of mechanical seal.

Measure the insulation resistance of the motor to confirm that it can be run without problems.

Apply power to the oil heater at least one hour prior to starting the operation. Also, before starting to operate the system, check the temperature and pressure inside the package unit to make sure that the refrigerant is not condensed in the package.

Chapter 5 Maintenance and Inspection

5.1 Precautions for Maintenance and Inspection

When reading this Section, also refer to Section 1.1 in this manual Chapter 1.

DANGER

- **When entering the machine room for maintenance services, ensure that sufficient ventilation has been started and measure the oxygen concentration so that there is no risk of oxygen deficiency. The ventilation must be continued steadily until the work is completed.**
- **For performing the inspection work, be sure to prepare safety shoes, protective glasses, gas mask and other proper protective gear and do not fail to use them whenever they are required.**
- **After stopping the machine and before working on a periodic inspection or overhaul, be sure to shut off the main motor power, control power, and other power to each equipment and valve. After they are shut off, be sure to make the switches inoperable by others. Also, be sure to attach notification tags to prohibit operation (lock-out/tag-out).**
- **When any manual stop valve has been closed, be sure to make the valve inoperable by others and put a notification tag to prohibit the operation (tag-out).**
- **When the compressor is to be overhauled, check that the internal pressure of this product is at the atmospheric pressure before starting the work.**
- **When using lifting devices, e.g. a crane, etc. and/or lifting tools, ensure that they can sufficiently withstand the load.**
- **When lifting a heavy load object, do not allow anyone's body to put under it.**
- **The work to turn each power supply ON/OFF or operate a lifting unit must be exclusively performed by qualified personnel.**
- **When using electric tools, ensure that they are properly managed in accordance with each instruction manual. Especially before using and while using, be sure to follow the care instructions on the safety of each instruction manual.**

WARNING

- **Be sure to use only MYCOM genuine parts for replacement. Using parts that are not genuine can cause damage to this product or other devices during operation.**
- **Do not convert or modify this product or its components without prior permission from MAYEKAWA. Otherwise, it can lead to an unexpected accident.**
- **Exercise sufficient care for handling a heavy load object, and use such a lifting device as a crane or work with an adequate number of personnel commensurate with the magnitude of the weight. Also, be sure to use stud bolts (safety retention bolts) and other support tools for the work. Neglecting the above warning can lead to low back pain of the worker or injury due to dropping of the parts.**
- **If two or more people are to work together, be sure to clearly define the work procedures to share a common understanding among all workers before performing the work.**
- **Not only the work to turn each power supply ON/OFF or operate a lifting device, but also any type of work requiring qualification must be exclusively performed by qualified personnel.**

⚠ CAUTION

- **When checking the operation data of units and performing other daily maintenance services, pay particular attention to avoid touching the area heated to a high temperature causing skin burns or inadvertently moving the handle of a valve leading to an erroneous operation.**
- **In the disassembly/inspection workplace, secure a sufficient space for temporary storage of the removed parts and tools, replacement parts, and for the disassembling work as well as safety passages, and then put up necessary off-limit signs.**
- **In the workplace, secure a sufficient space and refrain from putting tools directly on the floor or from haphazardly laying wires.**
- **Keep the floor clean all the time. Leaving the floor smeared with oil and the like causes it to be slippery and may result in the fall and injury of personnel. Thus, do not leave it but wipe it off right away.**
- **Make sure that the temperature of the high temperature sections such as head covers and discharge lines has been cooled down to normal ambient temperature, before working on them.**
- **When disassembling and reassembling the compressor, use the specified tools properly. Before starting to use those tools, gain the full understanding of their characteristics and the method for use.**
- **During the maintenance service, keep the tools clean all the time. Using those tools smeared with oil increases the risk of slip and fall, leading to an injury. Also during the service, there is a risk of foreign matters intruding inside the compressor to cause its damage.**
- **Parts are slippery with oil. Fully watch out for the risk of any object falling down. Pay attention to any parts falling down, which could lead to personal injury.**

CAUTION

- **Before disassembly, inspections, and handling of the compressor, sufficiently understand the disassembly and assembly procedures.**
- **When removing a part, be careful not to damage it.**
- **Place the removed parts on a clean workbench in an orderly manner.**
- **For cleaning parts, use kerosene and machine parts cleaning sprays available on the market.**
- **Washed parts shall be dried by compressed air or wiped up using clean cloth. Do not use synthetic textiles or woolen textiles to prevent fibers from attaching the parts.**
- **Removed bolts from each part should be classified into each used section to prevent confusion.**

- Note that although this manual describes the disassembling and reassembling practice of the K-series compressor, it does not define the maintenance procedure to the minute details, but only covers its key points only.
- If complete disassembly and reassembly of this product are required, please contact your nearest sales office or service center of MAYEKAWA.
- The figures marked with brackets [ ] immediately following each part name in this manual indicate the part numbers given in Section 7.1 " Development Views" and Section 7.2 "Parts Configuration Table" in this manual Chapter 7.

5.2 Maintenance and Inspection List

5.2.1 Daily Management

For the purpose of daily maintenance, check the items listed in Table 5-1 "Daily Inspection Item" and record the results.

By regularly recording the daily operational data in an operation log, it should be able to detect any significant change in the system. This practice is particularly effective in preventing possible failures of the compressor.

It is particularly important to keep track of the records that indicate the relationship between the temperature and pressure, as it is closely related to the evaporation and condensation of the refrigerant, in quickly finding any abnormal condition of the compressor or the system.

Keeping an operation log can facilitate the efforts to properly track down the cause of failure or accident that may occur in the compressor or the system, making it easier to quickly and accurately deal with the situation.

Also keep in mind to always neatly arrange the spare parts, tools, and other things and keep the machine room clean and clear of unnecessary items.

Table 5-1 Daily Inspection Item

Inspection Item			Inspection details	Remarks
Compressor	Hours of operation	hr	Total hours of operation	• Used to determine the timing of periodic maintenance and inspection
	Suction pressure	MPa	Difference from the specified pressure for the specified evaporation temperature	• Clogging of the suction filter • Cleanliness of the cooling pipe surface • Temperature and flow of the items cooled
	Discharge pressure	MPa	Difference from the condensation pressure for the specified cooling water temperature	• Cleanliness of the condenser cooling pipe • Mixing of non condensing gas • Amount and temperature of the cooling water
	Oil supply pressure	MPa	Difference from the suction pressure	• Whether the differential pressure is decreasing or not • Liquid flow-back operation • Wear of compressor parts
	Suction temperature	°C	Whether upper/lower limit temperatures are not exceeded	• Temperature and flow of the items cooled
	Discharge temperature	°C	Whether it is within the upper limit temperature	• Mixing of non condensing gas • Supply oil temperature, insufficient amount of oil • Failure of the compressor
	Supply oil temperature	°C	Whether upper/lower limit temperatures are not exceeded	• Cleanliness of the cooling pipe of the oil cooler
	Oil level in the crankcase	-	Whether upper/lower limits are not exceeded	• Note that the apparent oil level rises if the refrigerant is highly absorbed in the oil.
	Leakage from shaft seal	mL/h	Amount of leak per hour: • Normal leak ≤ 3	Guideline for inspection: • Overhaul ≥ 9
	Noise and vibration	-	Abnormal noise or vibration	• Failure of the compressor/motor • Problems with V-belts/coupling
	Cooling water hose	-	Water leak, disengagement	
Others	Motor current	A	Whether it is increased from the time of the commissioning	• Failure or overload of the compressor or the motor
	Temperature inside machine room	°C	Whether it is within the acceptable temperature range for the motor	• Overheating and failure of the motor
	Liquid level of the liquid receiver	-	Liquid level height	• Add refrigerant
	Refrigerant leak check	-	Any refrigerant leak	• In the machine room and in the facility on the load side

■ **Unless otherwise specified, the pressure unit "MPa" represents the gauge pressure in this manual.**

5.2.2 Periodic Inspection

Conduct inspection for the following items according to the specified schedule.

In addition, regarding other related items such as any safety devices (e.g. gas leak detectors), or other utility (gas/electricity) protection devices that constitute the cooling system together with the compressor, even if they are not directly connected to the compressor, any regulatory requirements that require inspection and recording of the results must be observed according to the instructions provided.

Table 5-2 Periodic Inspection Items

Inspection Item	Inspection interval	Remarks
Tension and degradation of V-belts	Monthly	To be replaced if any abnormality is found
Suction filter and Oil filter	Inspection and Cleaning at 100, 300, and 700 hours after starting the initial operation	Inspection and cleaning is required regardless of the hours used if it is determined that the lubrication oil is dirty and/or the filter is clogged.
	After that, inspection and cleaning shall be performed at 1000-hour intervals.	
Pressure gauge/pressure sensor	Yearly	Be sure to comply with the regulatory requirements in your locality. To be replaced if any abnormality is found
Thermometer/temperature sensor	Yearly	
Protection devices and safety valves	every 6 months	
Lubricating oil (Analyze or Replacement)	Replacement; After a laps of 100 hours, 300 hours and 700 hours from starting the initial operation	
	After that, analyze every 6 months or replace at 1000 hours interval	When performing the oil analysis management of every six months, replace the oil if the analysis result does not satisfy the management criteria shown in Section 4.1.3.
Motor greasing	Follow the instruction manual for the motor	
Filters and other components in the cooling water system	Yearly	To be cleaned if not clean enough
Shaft seal	Every year or every 8000 hours of operation	To be replaced if any abnormality is found
Direct coupling	Every year or every 8000 hours of operation	To be replaced if any abnormality is found

■ **The inspection shall be performed according to the calendar time or operating hours, whichever comes first.**

5.2.3 Compressor Overhaul

5.2.3.1 Guideline for the Overhaul Timing

CAUTION

- **The required frequency of compressor overhaul will vary depending on the compressor model, refrigerant, rotating speed, usage condition, state of system, and type of oil. The cost of parts replacement will be charged to the customer even if the part failure occurs before reaching the overhaul time listed in this section.**
- **Replacement of consumables used in the K-series compressor shall normally be made at the time of overhaul.**

The recommended overhaul timing is shown in the Table 5-3 below as a guideline.

Here, it is assumed that:

(1) The operating condition is within the specified operation range, and

(2) The number of start/stop cycles is within the specified limit.

Table 5-3 Guideline for the Overhaul Timing

Type of inspection	Recommended timing
Level 1 overhaul	8000 hours of operation or one calendar year, whichever comes first
Level 2 overhaul	16000 hours of operation or two calendar years, whichever comes first

5.2.3.2 Level 1 Overhaul

Remove shaft seal cover, head cover, and hand hole cover and take out the pistons and connecting rods. If no abnormality is found, it is unnecessary to remove the crankshaft or the bearing housing.

Table 5-4 Level 1 Overhaul Items

Part No.	Inspection point	Action
1	Crankcase	Cleaning inner case
2	Crankshaft pin part	Inspection and replacement if any abnormality is found
32	Shaft seal	Inspection and replacement if any abnormality is found
61	Cylinder sleeve	Inspection and replacement if any abnormality is found
71,72	Suction plate valve and spring	Replacement
77	Connecting rod	Inspection and replacement if any abnormality is found
84	Connecting rod bearing halves	Replacement
85	Piston	Inspection and replacement if any abnormality is found
86	Piston pin	Inspection and replacement if any abnormality is found
106	Piston ring set	Replacement
110,116	Discharge plate valve and spring	Replacement
119	Oil filter	Cleaning
154	Suction filter	Cleaning
-	Gasket	Replacement
-	O-ring	Replacement
-	Lubricating oil	Replacement
-	Motor grease	Refer to the instruction manual of the motor.

5.2.3.3 Level 2 Overhaul

Remove the crankshaft and main bearing housing at the level 2 overhaul.
Conduct inspection for the following items in addition to the level 1 overhaul items.

Table 5-5 Level 2 Overhaul Items

Part No.	Inspection point	Action
2	Crankshaft	Inspection and replacement if any abnormality is found
12	Main bushing	Inspection and replacement if any abnormality is found
20	Thrust washer	Inspection and replacement if any abnormality is found
-	Other each block parts	Inspection and replacement if any abnormality is found

5.3 Preparation for Overhaul

5.3.1 Replacement Parts

Prepare the required MYCOM genuine parts according to Chapter 7, Section 7.2 "Parts Configuration Table" in this manual.

All the O-rings and gaskets of the parts disassembled during the overhaul work must be replaced by new ones as they can be easily damaged in the disassembly process.

When ordering parts, be sure to inform the (a) model name, (b) serial number, (c) part name, (d) part code, and (e) quantity required to our sales offices or service centers.

In particular, when the serial number (b) is unknown, the details of design and manufacturing specifications cannot be identified, and thus the required part can hardly be selected.

5.3.2 Disassembly Tools and Workplace

Before proceeding with the disassembly work, prepare necessary disassembly tools for the K-series compressor by referring to Chapter 7, Section 7.7 "Disassembly Tools" in this manual.
In addition, prepare other necessary tools and materials including general hand tools, GC grinding stones, sandpapers of #80 to #100, about #400 to #800 sandpapers, parts cleaner, lubricating oil, oilcan, empty can to receive drain oil, waste, etc.

In the disassembly/inspection workplace, temporary storage places to put the tools, disassembled parts, and replacement parts, workplace for the disassembly work, safety passages, and necessary off-limit signs shall be provided.

5.3.3 Refrigerant Gas Recovery

Before the disassembly work, the refrigerant contained in this product must be recovered for not to discharge it into the air.

There are a few methods of recovering the refrigerant. For example, one method is to operate the refrigerator, close the supply source valve, turn the gas into liquid, and recover the liquid at the receiver. Another method is to use a refrigerant recovery machine to recover the liquid. As such, choose the means that best meets your purpose and legal requirement.

Prepare a working flow sheet of the system beforehand. Prior to the recovery work, check the valves to be controlled during the recovery work by comparing them with the ones in the flow sheet, and clearly note the valves to be operated, other connected devices, and tubes on the flow sheet.

Two flow sheets must be prepared, i.e., one at the foreman and the other for posting in the workplace.

In addition, prepare a work procedure document for the refrigerant recovery work to reflect the actual conditions of the workplace, and sufficiently share the work details among all the coworkers through checking and confirmation before actually starting the work.

WARNING

- **Before the work, be sure to check and communicate the work details and procedures among all coworkers, and carry out hazard prediction activities based on the information shared. Neglecting to do this will increase the risk of on-the-job accidents and injuries to a considerable level.**
- **All the valves that have been opened or closed during the work must be prevented from accidental operation through proper lock-out and tag-out procedures.**

If the lubricating oil used is compatible with the refrigerant, a large amount of refrigerant should be contained in the oil. Accordingly, after the refrigerant has been recovered once, the refrigerant contained in the oil will be evaporated to increase the pressure inside the crankcase. As such, be sure to recover the refrigerant repeatedly for a few times, until the pressure becomes low and no more increased.

After completing the recovery work, shut down the related drive power and control power, and securely carry out the lock-out and tag-out procedures.

5.3.4 Discharging the Lubricating Oil

After completing the refrigerant recovery work, fill the crankcase [1] with air to reduce the internal pressure down to the atmospheric pressure. Then, connect a hose to the oil supply and discharge valve, prepare a container to receive the oil, and then drain the oil.

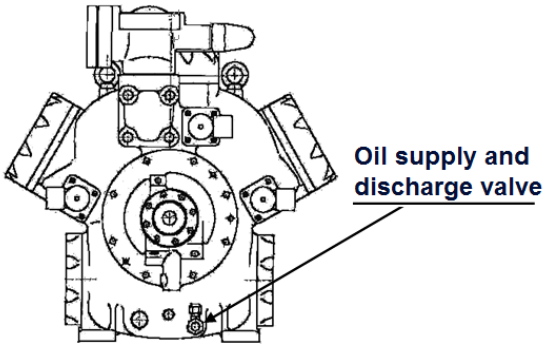

Figure 5-1 Oil Supply and Discharge Valve

5.3.5 Removal of V-belts or Coupling

WARNING

- **The V-pulley (approx. 21kg) or the coupling hub (approx. 10kg) is a heavy component. The removal work must be performed by a number of people appropriate to carry the weight.**

a) Disengage the V-belts or coupling assembly to separate this product from the motor.

b) Remove the pulley or the coupling hub on the compressor by using a pulley removing tool. Loosen the pulley set bolt [7]. From the point the spring washer can be freely moved, further loosen the bolt three turns and leave it at the position. Set the pulley extractor in position and remove the pulley from the crankshaft [1]. As the shaft is tapered, you can easily remove the pulley after using the pulley removing tool to loosen it only a small amount.

c) Take off the pulley removing tool, remove the pulley set bolt, and remove the V pulley or coupling hub from the crankshaft.

Note:
If it is a K-series semi-hermetic compressor, refer to the instruction manual for the package unit or motor. Even if only the compressor is to be overhauled, because the overhaul work requires rotation of the crankshaft, it is still necessary to remove the end cover of the motor to rotate the crankshaft together with the motor shaft.

5.4 Disassembly

5.4.1 Removal of Head Cover (Head cover mass: approx. 8kg)

The K-series models do not employ head springs.

In the case of 6K or 8K, first remove the upper head cover [49]. This is for not to damage the bottom cylinders or valves as well as to prevent entry of foreign matter.

CAUTION
● **Dropping the head cover can cause injury or damage to the compressor. When removing the bottom head cover of a 6K or 8K compressor, be sure to insert stud bolts before the work to ensure the safety.**

a) When removing the bottom head cover of a 4K, 6K, or 8K compressor, remove the upper center bolt and screw in a stud bolt (safety bolt). After loosening and removing all the head cover fastening bolts [52], remove the head cover (see the bottom left picture).

   If the gasket [51] is sticking and the head cover cannot be moved, use a soft hammer to lightly tap the sides of the head cover. The gasket will be detached and you can remove the cover easily.

b) Under the head cover, there is the valve plate [73] that is fastened together by the head cover bolts. This valve plate is fixed to the crankcase by two positioning pins and two bolts.

After removing the head cover

If the specification assumes the use of ammonia:

The water cooling head cover [50] has a cooling jacket. In this case, before removing the head cover, close the inlet and outlet valves of the cooling water system, discharge the cooling water in the cooling water system of the compressor, and then remove the jacket cover [53].

a) Loosen the hose band on the braided high pressure hose and pull the hose to disconnect it from the hose nipple.

b) Remove all the jacket cover fixing bolts [54] and remove the jacket cover and the gasket [55].

5.4.2 Discharge Valve Assembly

a) The discharge valve assembly is fastened to the valve plate [73] using two positioning pins and three discharge valve fixing bolts [75].

b) Remove the bolts fastening the discharge valve cage [109], and lift up the cage to remove it. You should carefully pull it out straight, keeping a right angle to the valve plate surface. Otherwise, the pins may be caught making it difficult to remove.

Removal the discharge valve cage

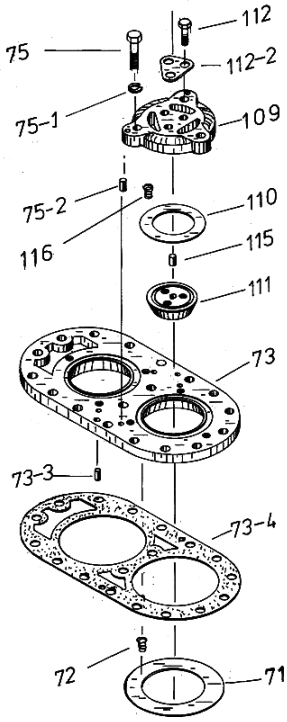

Figure 5-2 Discharge valve assembly

c) The upper surface of the valve plate, after removing the cage, serves as the outer seat for the discharge plate valve. Be careful not to scratch the surface of the seat.

d) The discharge valve seat [111] is fixed on the discharge valve cage using three bolts [112] and a positioning pin [115]. Loosen and remove the bolts after lifting up the claw of the lock washer [112-2] on each bolt. Removing the seat will disengage the discharge plate valve [110]. As the discharge valve springs [116] are inserted in the spring holes on the cage (6 holes for fluorocarbon refrigerant and 4 holes for ammonia refrigerant types), you can use your fingers to pull it out.

Note: The depth of the spring holes on the cage is 6.5 mm for the fluorocarbon coolant type and 7.0 mm for the ammonia coolant type.

5.4.3 Valve Plate (approx. 3.5kg)

a) The valve seat [73] is fixed to the crankcase by the head cover fixing bolts and two bolts in the center. For proper positioning on the crankcase, two valve plate positioning pins [73-3] are used.

b) Remove the two bolts and lift the valve plate straight up from the fastening face. If the gasket does not come off, screw in the cage fastening bolts [75] to the tapped jacking screw holes to detach the gasket.

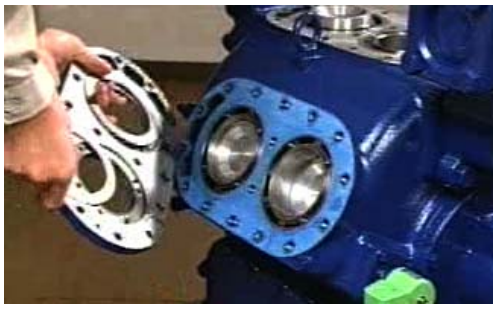

Removing the valve plate

After removing the valve plate

5.4.4 Hand Hole Cover (approx. 8 kg)

a) Remove the two screws fastening the hand hole cover [45] in the upper center, and screw in two stud bolts [48] for ensuring the safety. Remove the remaining bolts and pull the hand hole cover towards you to remove it. If the gasket [47] is sticking and it cannot be moved, use a soft hammer to lightly tap the sides of the hand hole cover. The gasket will be detached and you can remove the hand hole cover easily.

b) There are two types of the hand hole cover (i.e., old and new types), and the difference is in the mounting method of the oil sight glass. The new type oil sight glass [164] is mounted outside the hand hole cover with three bolts [167]. There is an O-ring [165] between the oil sight glass and the hand hole cover. The oil sight glass can be removed by removing the bolts.

Hand hole cover

Removal of the Hand hole cover

【POINT】

- The old type oil sight glass is mounted inside the hand hole cover. The sight glass is sandwiched by gaskets [165-1, -2] and fixed in place being pressed by the oil sight gland [166] using fixing bolts. When replacing the oil sight glass or gasket, you can remove the bolts to fully disassemble it. When assembling, be careful not to excessively tighten the bolts.

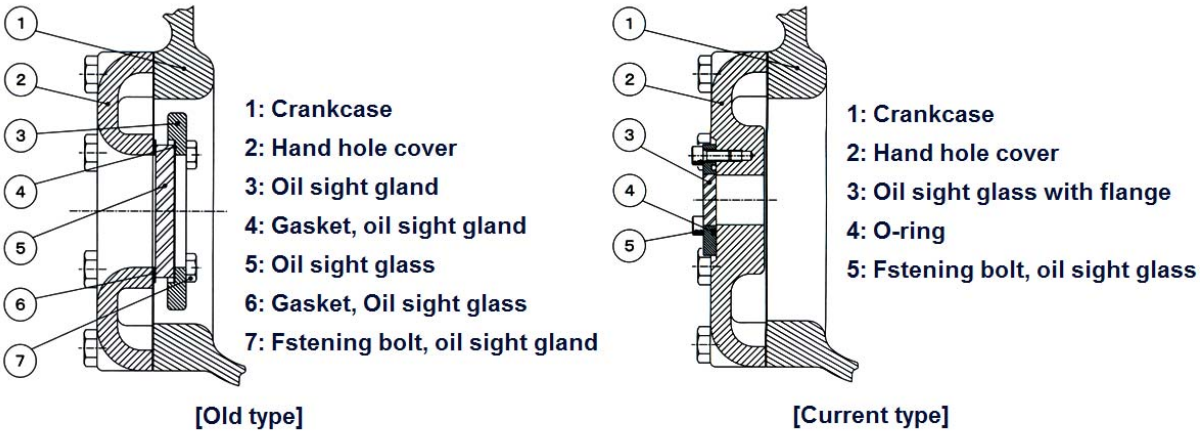

Figure 5-3 Old/Current type of the Oil sight glass

5.4.5 Cylinder Assembly (approx. 3.5kg)

5.4.5.1 Pulling out the Cylinder Assembly

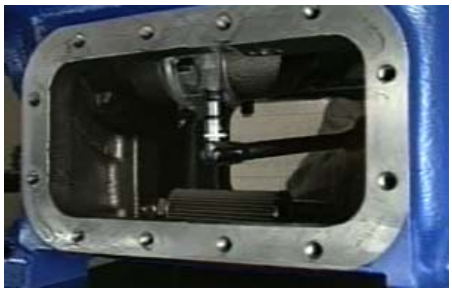

a) Since the width of the large end of the connecting rod [77] is wider than the inner diameter of the cylinder sleeve [61], the cylinder sleeve, piston [85], and rod are to be removed together from the crankcase as an assembly.

b) Turn the crankshaft [2] to allow the piston of the cylinder to be removed to reach its bottom dead center. When rotating the crankshaft, the friction of the piston rings [89, 90, and 100] of the piston in the up stroke may push up the cylinder sleeve to lift it from the crankcase. To prevent this, you should press down the collar of the sleeve while rotating the crankshaft.

c) Remove the second nut [81] first, and then the first nut [80] of the connecting rod fastening bolt [78] by accessing from the hand hole (see the top right picture). Be careful not to lose the fastening washers [79].

d) Remove the connecting rod cap (see the middle-right picture).

e) Hold the collar of the cylinder in one hand, insert the other hand inside the crankcase from the hand hole, and hold the large end of the connecting rod to remove the entire assembly carefully not to hit the wall of the crankcase (see the bottom right picture).

f) In a similar manner, pull out all other assemblies. The cylinders should be put in order so that the mounting position of each one can be easily identified. Place the rod caps, bolts, and nuts together as a set (see the picture below).

5.4.5.2 Pulling out the Connecting Rod and Piston

a) Place the cylinder assembly with the cylinder seat (flange side) down on a wooden or plastic board. Remove the rod fastening bolts [78] in advance.

b) While holding down the cylinder [61] with one hand, use the other hand to pull out the connecting rod by grasping its large end [77].

5.4.5.3 Cylinder Sleeve

【POINT】

- Normally, it is unnecessary to remove the cam ring from the cylinder sleeve. There are two types of cam rings differentiated by the slope of the triangular cuts: right-down or left down. As this difference is due to the mounting position onto the crankcase, which determines the direction of operation, carefully place them in good order, not to make mistakes when assembling the unit again.

a) By removing the retaining ring [65] (see below left picture), the cam ring [62L] [63R] can be removed.

b) The lift pin [68] can be pulled out from the cylinder (see the below right picture) by pulling out the E-ring [70] (see the below center picture) that is preventing the spring from being disengaged. Be careful not to lose the spring.

5.4.5.4 Piston and Connecting Rod

a) With the top of the piston [85] down on the table and the connecting rod [77] up, remove the piston pin lock spring [87] using a snap ring pliers (see below left picture).

b) Hold the piston and connecting rod, and use your finger to push out the piston pin [86] (see the above right picture). By removing the piston pin, the piston is separated from the connecting rod.

c) Leave the bearing halves [84] on the large end of the connecting rod as they are, if they are not to be replaced. The small end of the connecting rod functions as the bearing on its own.

d) Each connecting rod is marked with a three-digit number to indicate the combination between the main body and the rod cap, as shown in the picture to the right. Always keep them as a pair

5.4.5.5 Piston Ring

a) If the piston rings are not to be replaced, you don't have to remove them from the piston.

b) If removing a piston ring, widen the end gap in one plane. It is convenient to use wire rings as shown in the picture below. (You can make them using a thick copper wire, for example.)

CAUTION
• **If you twist the ring while trying to widen the gap, it may be deformed to cause some gap between the piston ring and the cylinder after reassembly; such a gap can increase oil loss (i.e., oil consumption).**

5.4.6 Unloader Mechanisms

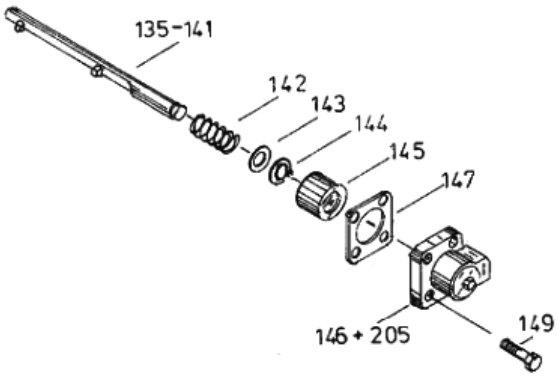

Figure 5-4 Unloader Block

It is unnecessary to disassemble the unloader mechanisms if it has no operational problems in normal operation.

a) If the unloader mechanism is to be disassembled, pull out to remove the solenoid after removing the solenoid mounting bolts of the unloader solenoid valve. (see the picture below right). Unscrew and remove the bolts [149] of the unloader cover [146]. As the cover is pushed outward by the unloader spring [142], be sure to hold it with your hand.

b) After removing the cover, you can pull out the unloader piston [145], push rod [135, 136, and 137], and the spring.

   The length of the push rod is different depending on the cylinder position. Be sure to record the corresponding cylinder number and the orientation of the cover for each push rod.

c) Do not remove the stop ring [144] and washer [143] of the push rod.

【POINT】

- The components of the unloader mechanism are divided into the ones to be attached to the crankcase and the ones attached to the cylinder sleeve.

Table 5-6 Unloader Components (to be attached to the crankcase)

Part No.	Part Name
135	Unloader push rod
142	Unloader device spring
143	Unloader push rod washer
144	Unloader push rod snap ring
145	Unloader piston

Table 5-7 Unloader Components (to be attached to the cylinder sleeve)

Part No.	Part Name
62L	Unloader cam ring (left downward)
63R	Unloader cam ring (right downward)
65	Retaining ring
68	Lift pin
69	Lift pin spring
70	Lift pin stop ring (E-ring)

5.4.7 Shaft Seal Block

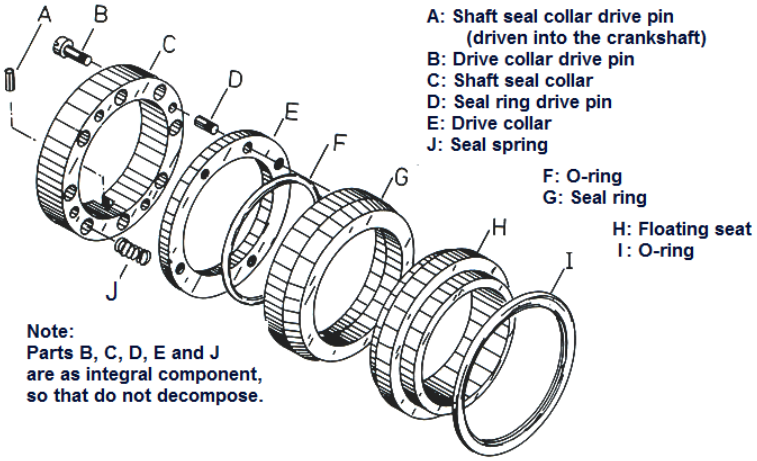

Figure 5-5 Mechanical seal assembly

a) Oil is deposited inside the shaft seal cover [26]. Prepare an oil pan underneath.

b) Loosen all the seal cover fastening bolts [28]. When the gasket [27] is not stuck, a gap is created between the cover and case by the spring force of the seal [32]. Remove all bolts except for two bolts at opposite positions. Then, remove the last two bolts evenly by holding the cover with one hand.

c) Pull off the cover in parallel with the crankshaft direction (see the following picture to the left).

d) If the cover is stuck due to the gasket, loosen the bolts and move the cover slightly to the left and right to remove the cover.

e) The seal cover is attached with a floating seat together with an O-ring (see the following picture to the right).
This floating seat can be removed by pushing it from the outside of the cover. As this is made of a fragile material, be careful in handling it.

f) When the shaft seal cover is removed, you can see the mechanical seal assembly [32] inside (see the picture above left). The mechanical seal assembly comprises, among others, the seal ring and O-ring as well as the drive collar and spring to push the seal ring, and is linked with the crankshaft via a spring retainer positioned by a drive-in spring pin.
In addition, the floating seat and O-ring is assembled on the shaft seal cover side.

g) By holding the mechanical seal assembly with both hands and firmly pulling out the backmost seal collar, the entire assembly can be pulled off from the shaft.

h) As the seal assembly thus pulled out can be readily scattered, put the parts together and keep them in order. Protect the sliding parts of the seal ring from being scratched.

5.4.8 Bearing Housing (approx. 14kg)

【POINT】

- Before removing the bearing housing [8], measure the clearance in the thrust direction of the crankshaft (i.e., thrust gap).
  After pushing the shaft in the crankcase as far as it will go to the seal side or pump side, measure the clearance between the metal and the end face of the shaft on the opposite side using a thickness gauge.
  As an alternative and equivalent method, push the shaft towards the pump and set the dial gauge at the crankshaft end (as shown in the picture to the right), and then pull the shaft in the thrust direction to measure the travel distance.
  The gap should normally be about 1 mm. If it exceeds 1.5 mm, there is a possibility the thrust washer is worn.

a) Unscrew and remove all the bearing housing fastening bolts [10]. The flange of the bearing housing has a tapped hole to be used to pull off the flange. Screw one of the bolts removed into the tap to lift the bearing housing (see the following center picture). Set the gasket [9] on the crankcase side.

b) After the bearing housing has been sufficiently pulled out, hold the housing with both hands and pull it towards you. At this point, if the crankshaft is tightly fitted in the bearing of the bearing housing, it may come out together due to the friction between them. To avoid this, ask someone to hold the shaft from the seal side or from hand hole while you are pulling out the bearing housing.
   Careful handling is required for not to damage the main bushing.

5.4.9 Pump side Main Bushing and Thrust Washer

a) The main bushing [12] (see the bottom left picture) is a thin wall rolled bushing, press fit in the hole of the bearing housing [8]. When the main bushing is to be replaced, the whole bearing housing assembly must be replaced.

b) The thrust washer [29] (see the picture below right) is a ring-formed metal plate with back-metal, and is fixed on the thrust surface of the bearing housing using pins [13]. When replacing the thrust washer, use the tip of a small flat-tip screwdriver to lift up the inner periphery of the washer and push it out.

5.4.10 Oil Pump

The bearing housing is fitted with an oil pump and main bushing. The pump is a reversible trochoidal pump, and it has a mechanism to automatically discharge oil in one direction according to the direction of the shaft rotation.

When the performance of the oil pump is degraded, the whole bearing housing assembly must be replaced.

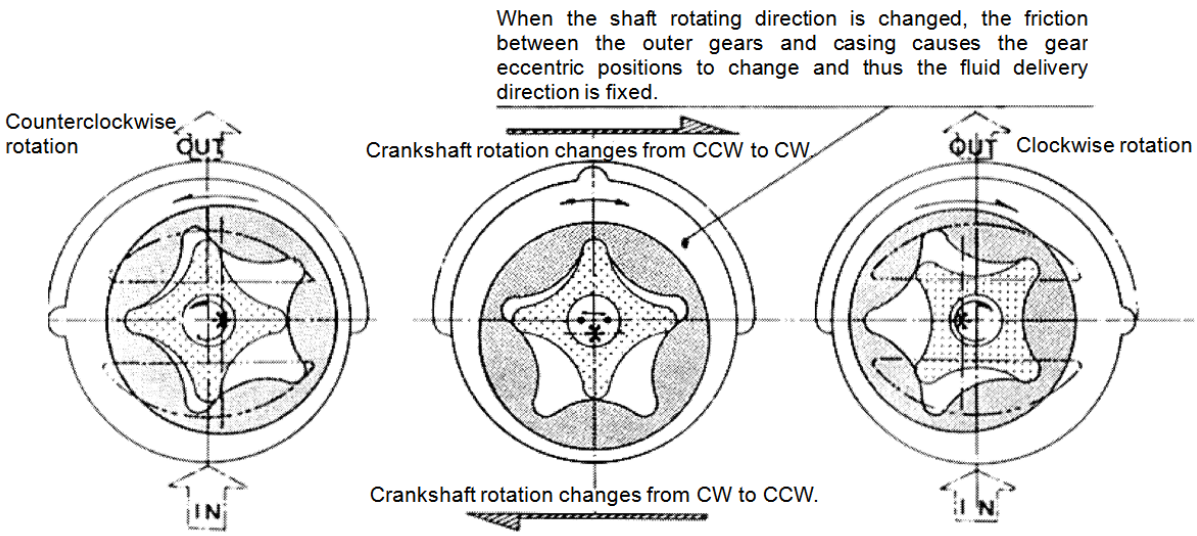

Figure 5-6 Reversible Trochoidal Pump

5.4.11 Crankshaft (approx. 22.5kg)

a) After the bearing housing has been removed, the crankshaft is held at one end, being fitted in the metal of the shaft seal side.

First, hold the crankshaft at both ends and pull it out to put the balance weight on the bearing housing side on the flange that is used to mount the bearing housing.

b) Next, put the central arm on the flange, in the process to shift the position one by one.

c) After removing the crankshaft, place it on wooden blocks wrapped in waste cloth for not to make scratch and support both shaft ends. The wooden blocks should have a V-cut to prevent rolling of the shaft.

5.4.12 Shaft Seal side Main Bushing and Thrust Washer

【POINT】

- In the K-series compressors, the bearing on the shaft seal side (main bushing [12]) is press fit in the body of the crankcase. When replacing the main bushing, a special tool is required.
- Similarly to the bearing housing, the thrust washer [29] on the shaft seal side is fixed by pins on the recessed area of the crankcase (see the pictures below left). When replacing the thrust washer, likewise the bearing housing, use the tip of a small flat-tip screwdriver to lift up the inner periphery to remove it.

Before removing the thrust washer

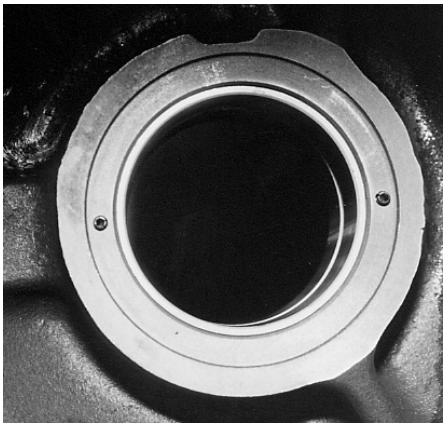

After removing the thrust washer

5.4.13 Oil Filter

The oil filter [119] is mounted on the crankcase using a hexagonal nipple [118]. Remove the oil filter using a wrench on the hexagonal portion of the nipple. As the mesh itself has no structural strength, it can easily be damaged if excessive force is applied.

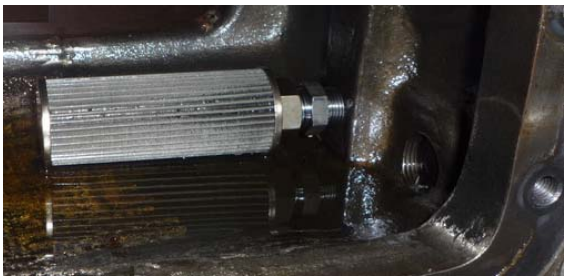

5.4.14 Suction Filter

In the case of 2K and 4K models, remove the bolts of the suction cover [161] and remove the suction filter [154].

In the case of 6K and 8K models, the suction filter is inside the suction elbow [175]. You can pull out the suction filter after removing the bolts and removing the elbow.

Be sure to clean the filter in a periodic inspection.

5.4.15 Regulating Valve for Oil Pressure

The oil pressure regulating valve is screw-fixed on the right side as seen from the shaft side of the crankcase. It is unnecessary to disassemble the valve unless there is a problem in oil pressure regulation. When replacing the valve, use a wrench on the hexagonal portion on the oil pressure regulating valve.

5.4.16 Gas Equalizer

A hole is provided to equalize the pressure difference between the suction chamber of the crankcase and the crankshaft chamber of the crankcase.

And a gas equalizer is fixed by two bolts to this hole so that no oil drop from the crankshaft chamber will enter the suction chamber. This equalizer does not need to be disassembled.

5.5 Reassembly

CAUTION

- **For the composition of the suction valve and discharge valve, refer to Chapter 7, Section 7.3 "Configuration of Plate Valves and Associated Parts" in this manual.**
- **When replacing parts, check the type and compatibility before the assembly work.**
- **If any minor defect is observed on the parts to be assembled, such as a minor scratch caused during disassembly or surface rust due to long-period storage, use a sand paper (#800 to #1200) to remove them.**
- **Prepare new lubricating oil in an oil feeder and apply the oil to various sliding surfaces immediately before the assembly work.**
- **Apply a sufficient amount of lubricating oil on both sides of the gasket before assembly.**
- **When tightening the fastening bolts, first fasten four diagonally opposite bolts applying 50 percent of the specified tightening torque. Then, fasten all bolts in the clockwise order applying the specified torque.**
  When fastening a part with a gasket, the bolts fastened earlier tend to become loose as the remaining bolts are fastened.
  Thus, be sure to tighten all the bolts for one more time at the specified torque, also for the purpose of the final check of the tightness.

  For the specified tightening torque of each bolt, refer to Section 7.4 in this manual.

Start the reassembly work after completing the cleaning of the assembly parts and tools. Most of the reassembly work will be performed in the reverse order of the disassembly work.

Perform the reassembly work even while referring to the description in Section 5.4 "Disassembly" in this manual.

5.5.1 Crankcase

a) Identify the main bushing and thrust washer [29] on the shaft seal side (see the picture following left) and apply oil to them entirely.

b) When replacing the main bushing, press fit the main bushing with the oil hole of the metal positioned on the right side as seen from the seal side (i.e., in the direction of the oil pressure regulating valve).

c) When replacing the main bushing, use the special press fit tool (see the picture following right) to remove and press fit the bushing. When press fitting the bushing, set the axial oil groove on the bushing upside. Then, insert the bushing by aligning the oil hole on the bushing with the oil hole in the crankcase (see the picture following left).

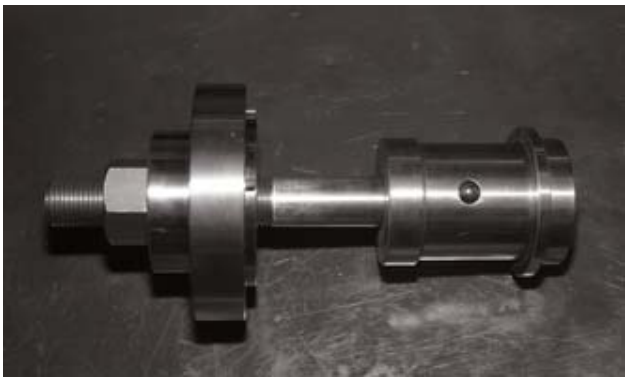

d) Mount the oil filter [119]. When screwing in the filter, only use the nipple [118] to tighten it without applying force to the metal mesh of the filter.

5.5.2 Crankshaft

a) Apply sufficient amount of assembly oil on the bearing portion of the crankcase and crankshaft. Place the balance weight on the shaft seal side of the crankshaft on the bearing housing mounting flange (see the picture following left).

b) Then, further insert the crankshaft to place the center arm on the flange (see the following center picture). When one end of the shaft enters the bearing during this process, be careful not to damage the bearing with the end of the shaft.

c) At a position where the balance weight on the oil pump side is only partially on the flange, the main bushing will be at the position to be fitted into the shaft bearing. At this position, as the shaft end is protruding on the seal side, hold both ends of the shaft and insert the bearing portion of the shaft into the main bushing. In this, be sure to move the shaft precisely along the center line of the hole.

d) Push in the shaft until it hits the thrust face(following picture to the center). Set the slot used to drive the oil pump in the vertical position.

5.5.3 Oil Pump, Main Bushing, Bearing Housing

a) When the main bushing [12] is to be replaced, the whole bearing housing assembly [8] must be replaced. If it is absolutely necessary to replace the main bushing, grind the main bushing to make it thinner to pull it out.

b) When press-fitting the main bushing, remove the oil pump and then use a hand press or other tool. When press fitting the bushing, position the axial oil groove on the bushing upside, set the oil hole of the bushing at the leftmost position as seen from the front, and press fit the bushing.

c) Align the position of the thrust washer [29] to the drive pins [13] and set it in place.

d) Mount the oil pump (see the picture following left). Align the gasket position, and mount the pump with its oil suction port facing down. If the position is wrong, the pump cannot function as intended.

e) Set the shaft end of the pump in the vertical direction, to be engaged with the crankshaft (see the picture following right).

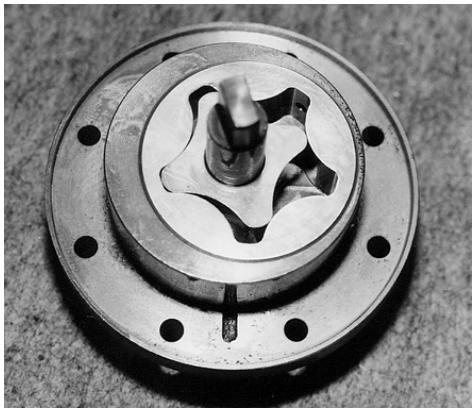

f) Apply sufficient oil to the crankshaft bearing. Attach the gasket [9] on the flange surface of the bearing housing. At this time, be careful about the oil hole position.

g) After setting the crankshaft into the bearing, slightly lift up the bearing housing and press it into the crankcase.

h) When it comes to the last 20 mm, the pump shaft will be engaged with the slot in the crankshaft. Slightly move the bearing housing to right and left to engage them.

i) When the pump shaft is correctly in the slot, you can lightly push them in. Tighten the bolts lightly, turn the crankshaft manually to check that the rotation is light and smooth, and then tighten the bolts further at the specified torque.

j) Measure the thrust gap by moving the shaft in the axial direction. (Acceptable range: 0.4 mm to 1.15 mm)

5.5.4 Shaft Seal

a) Attach the floating seat to the shaft seal cover [26].
Apply oil to the O-ring, lightly fit it with fingers, and evenly press it to fix in position. Be careful not to damage the sliding surface.

b) Set the drive pin [3] on the crankshaft at the top position (as shown in the white arrow in the following picture), align the cut (pointed by the yellow arrow in the picture) on the seal collar of the mechanical seal with the drive pin position, and press the whole seal assembly into the crankcase. After the assembly, rotate the seal assembly to the right and left to make sure that the pin is securely engaged with the cut.

c) Attach the gasket [27] to the seal cover, carefully aligning the oil hole position.

d) After applying oil on the entire seal assembly, move the seal cover straight along the centerline of the shaft and put it in place.

CAUTION
● **While the case has two oil holes, i.e., inlet and outlet as shown in the above picture, the seal cover has only one machined hole for supplying the oil. To allow checking of the correct cover assembly position, there is a triangle marking on the seal cover (on the models manufactured in 1992 and later), as it is pointed by the white arrow in the following picture. Be sure to assemble the cover with the triangle marking on the right side, as shown in the picture.**

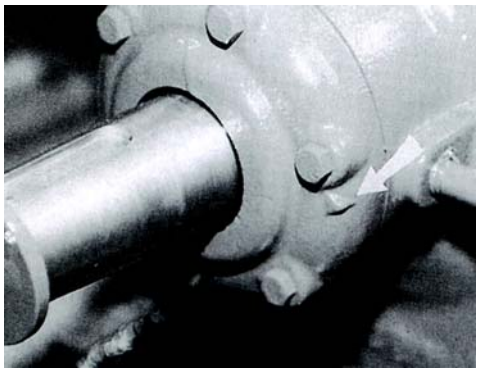

d) While holding the cover with your hand, fasten the bolts [28]. Tighten the bolts to the specified torque and check that the crankshaft can rotate freely.

5.5.5 Cylinder Assembly

5.5.5.1 Piston and Piston Ring

a) Fit the piston rings [89, 90, 100] on the piston [85]. You must install the rings one by one starting from the bottom oil ring. The ring composition depends on the refrigerant to be used. For rings for propane refrigerant, use the setting of August 2009.

When ammonia is used, because the oil film can easily be broken at high temperature due to the compression and the ammonia liquid lubrication performance is poor, the top ring has been changed from a casted one to a bronze ring with self-lubricating properties (GA-P).
As the color of GA-P is yellow, you can easily identify the ring.

Table 5-8 Configurations of Rings

	No.	Ammonia	Fluorocarbon	Propane
1 st	89	GA-P	FC-P	FC-PC-BF-G1
2 nd	90	FC-P		GA-P
3 rd	100	FC-CO	FC-CO	FC-PC-BC3

b) Similarly to removing the rings fit the rings in the grooves carefully not to twist it or excessively widen the end gap. Once the ring is in the groove, check that the ring can move freely in the groove.

c) Make the end gap positions of piston rings shall be separated by 180° with each other.

5.5.5.2 Piston and Connecting Rod

a) Place the piston [85] upside down on a table, and connect the small end of the connecting rod [77] to the piston with the piston pin [86]. Since clearance fit is used between the piston pin and piston pin hole, you can easily engage them by lightly pushing the pin.

b) After inserting the piston pin, set the piston pin lock spring [87] in the ring groove of the piston pin hole on both sides of the piston. Make sure that the piston pin lock spring is securely engaged in the ring groove on both sides.

c) When replacing the bearing halves [84] on the large end of the connecting rod, align the position of the whirl-stop claw on the metal with the position of the notch in the rod.

d) Attach the bearing halves onto the large end of the connecting rod. The bearing halves are designed to fit with the large end of the connecting rod by its own tension. Align the protrusion at the end of the bearing halves with the notch in the large end of the connecting rod and press the bearing halves into place. Be careful not to let any foreign matter get into between the bearing back metal and the connecting rod. In K series compressors, the top and bottom bearing halves are identical.

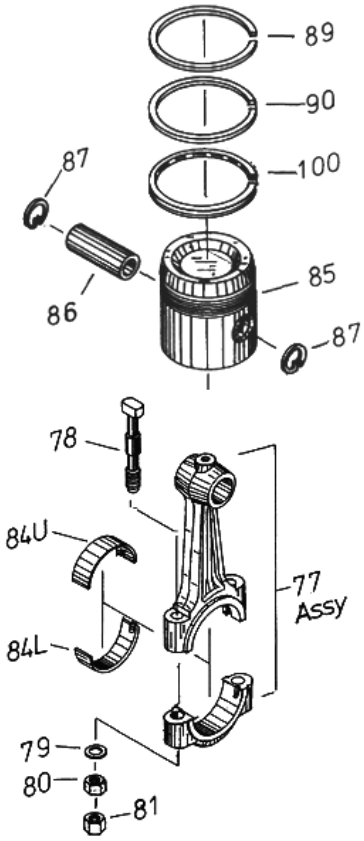

Figure 5-7 Piston and Connecting Rod

5.5.5.3 Cylinder Sleeve

a) When replacing the cylinder sleeve [61], first drive in the positioning pin into the flange.

b) Place the cylinder sleeve on the work table with its flange facing downward.

c) Attach the cam ring [62L] (or [63R]) and insert the retaining ring [65] in the groove in the cylinder to fix the cam ring.
Be careful about the direction of the slope of the cam ring.

d) Then, mount the lift pin [68] and lift pin spring [69], and set the lift pin E-ring [70] to prevent disengagement.

e) Turn the cam ring to adjust the cut-out slot position of the cam ring in relation to the position of the positioning pin. If the cam ring is the right-down type, the cut in the cam ring is at 45° in the right-handed rotation from the positioning pin as seen from the top of the cylinder sleeve.

If the cam ring is the left-down type, the cut in the cam ring is at 45° in the left-handed rotation from the positioning pin as seen from the top.

Because the positioning pin is on the centerline that passes the lift pin and the four lift pins are separated by 90° with each other, the cut in the cam ring is positioned in the center between two lift pins

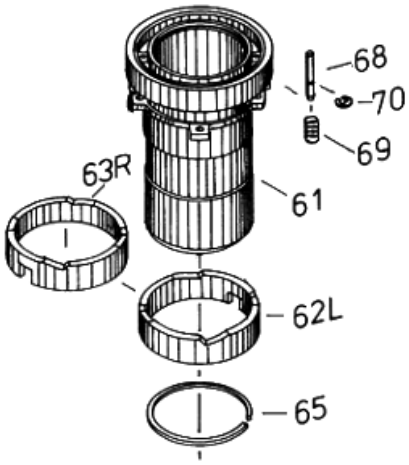

Figure 5-8 Cylinder Sleeve

5.5.5.4 Cylinder Sleeve and Piston·Rod Assembly

a) Turn the cam ring to protrude the lift pin out of the seat, and then raise the sleeve assembly with its seat side down.

b) Hold the rod of piston-rod assembly, apply oil to the piston, and then mount it in the cylinder. Insert the piston in the cylinder while pressing the piston ring into the groove from the outside by effectively using the tapered portion of the cylinder bottom (see the picture following left).

c) Refrain from excessively pushing the piston into the cylinder and stop it in the middle of the cylinder to return the cam ring to the original position.

d) Place the assemblies in an organized manner, according to the type of the cam ring and the order of the cylinder for the assembly (see the picture following right).

5.5.6 Installing Cylinder Assemblies in the Crankcase

a) Start assembling from the cylinders on the top side of the crankcase. Check again the direction of the cam ring, notch position, and the direction of the positioning pin for each cylinder assembly. Screw the rod fastening bolts [78] in advance.

b) Temporarily attach the unloader cover (see the picture above left), and adjust the position such that the protrusion on the unloader push rod comes to the center of the cylinder hole (see the picture above right). If the cover is mounted at the correct position, the position of the protrusion on the unloader push rod will be shifted.

c) Rotate the crankshaft to set the crank pin position of the cylinder to be assembled at the bottom dead center. Set the position of the piston at around the middle of the cylinder stroke. Then, start inserting the whole assembly into the hole in the crankcase. When the notch in the cam ring is engaged with the protrusion on the push rod, align the sleeve lock pin position (white arrow in the following picture in the center) to the notch in the crankcase (yellow arrow in the following pictures in the center and to the right), and push-in the cylinder into the case.

d) While pushing the piston down, put your hand on the rod to engage the bearing halves at the large end with the shaft pin portion, carefully not to scratch the shaft with the tip of the fastening bolts.

e) After checking the agreement of the mating number on the rod cap as well as the orientation of assembly, set the washer to the bolts and secure the cap with the first nuts. (When fastened to the specified torque, the inside diameter of the bearing halves will becomes a perfect circle.)

f) Each times the bolts are tightened for one connecting rod, rotate the crankshaft to check that it moves freely. Then, move the rod in the axial direction to check that it moves to some extent.

When turning the crankshaft, turn it slowly while holding the cylinder with your hand. As there is no stopper, the friction between the piston and cylinder lifts up the cylinder when the piston goes up. Instead of holding the cylinder by hand to prevent the lifting, you can also use a washer and bolt to hold down the collar portion of the cylinder using a screw hole for the valve plate.

5.5.7 Valve Assembly

5.5.7.1 Valve Plate

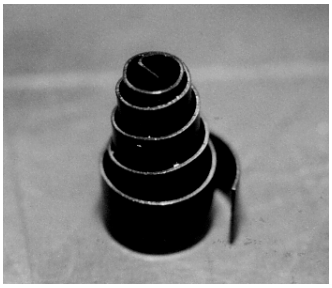

a) Assemble the suction valve spring [72] (see the picture to the right) on the suction plate valve [71] side of the valve plate [73]. As the outer diameter is large, twist the spring in the winding direction to shrink it when pushing it in.

b) Mount the suction plate valve in place and secure it on the valve plate using the clips to hold the suction plate valve. Do this for two cylinders at the same time.

c) Apply oil and attach the valve plate gasket [73-4] on the crankcase. Be sure to check that the valve plate parallel (positioning) pins [73-2] is at the correct position.

d) Make sure that the lift pins are positioned lower than the seat face of the cylinder sleeve. If any pin is protruding, you can lower it by temporarily fixing the unloader cover and pressing down the unloader piston.

CAUTION
● **If the above procedure is not followed and the valve plate is assembled with the lift pin up, the suction plate valve can be easily broken or deformed, causing a failure such as no compression (gas leak).**

e) Gently assemble the valve plate and engage it in position by aligning the positioning pins (see the yellow arrow in the following picture to the left). Fasten the two center bolts and remove the clips holding the valve (see the following picture to the right). Make sure that the position of the suction plate valve is correct.

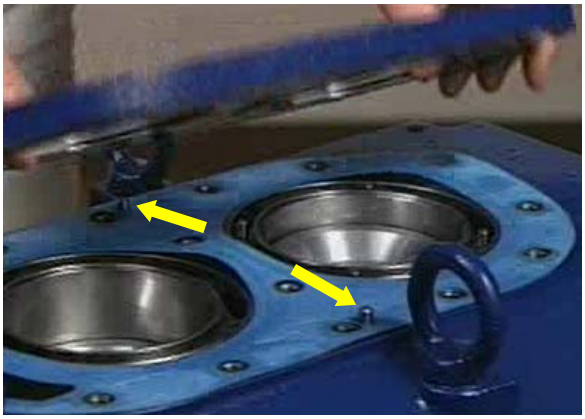

5.5.7.2 Discharge Valve Cage

a) Mount the discharge valve spring [116] into the discharge valve cage [109]. Twist the spring in the winding direction to shrink it when pushing it in.

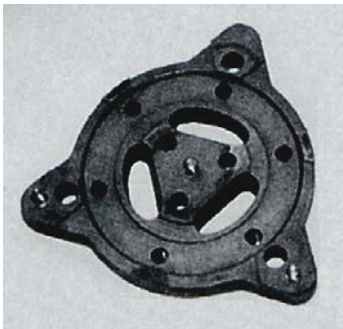

【POINT】

- On the discharge valve cage [110], there are four spring holes for the ammonia refrigerant type (see the picture above left) and six spring holes (see the picture above right) for the fluorocarbon and propane refrigerants. In addition, the depth of the spring holes is different: 7 mm for ammonia refrigerant type and 6.5 mm for fluorocarbon/propane refrigerant types.

b) Mount the discharge plate valve [110] and retain it with the discharge valve seat [111]. In this, be sure to align the center hole on the seat with the positioning pin [115] inserted in the cage.

c) Assemble the seat from the upper side of the cage using three bolts [112] and the hexagon head bolt retainer for discharge valve seat [112-2]. By aligning the central positioning pin hole on the valve seat with the central positioning pin [73-3], tighten the bolts at the specified torque.

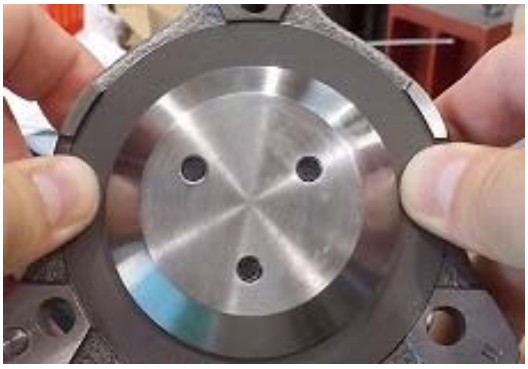

d) Press the valve with your fingers to check the motion of the valve (see the right picture).
Also check that the tip of the bolts fastened is not protruding from the seat face. If any bolt protrudes above the seat surface, it will hit the piston.

e) After the above check, use a flat tip screw driver or other tool to bend each corner of the washer to lock the bolts (see the picture following left).

f) Mount the cage with its two positioning pins aligned with the corresponding positioning pin holes on the valve plate, and fasten the cage using bolts. At this time, be careful about the length of the bolts. If the bolts are too short, the clearance above the piston will increase, and it reduces the volumetric efficiency. If they are too long, the suction valve will be pressed to cause no compression. Be sure to use the same length bolts as the ones previously used.

5.5.8 Head Cover

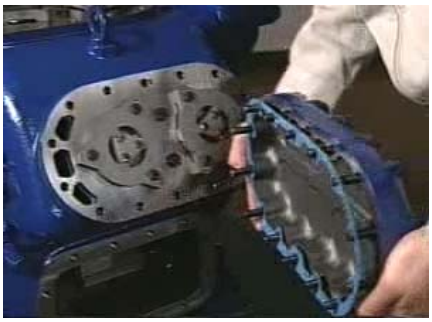

a) Attach the gasket [51] on the valve plate or on the head cover, and assemble the head cover [49]. Screw in the bolts [52] one by one diagonally, and finally tighten them to the specified torque. For the ammonia refrigerant type, mount the water cooling head cover [50] first. Then, attach the jacket cover gasket [55] and secure the jacket cover [53] using bolts [54]. Lastly, attach the jacket hose and tighten the hose band.

b) Rotate the crankshaft and check for any abnormality.

5.5.9 Hand Hole Cover

a) Check that no foreign matter is inside the crankcase.

b) Carefully check the mounting position, depending on with or without an oil sight glass. Attach the gasket [47] to the cover, not to shift the position when the bolts are fastened.

c) Hold the cover with your hand and fasten the upper bolts. Then, fasten all bolts at the specified torque.

5.5.10 Unloader Cover (with a solenoid valve)

a) Press the unloader piston [145] with your hand to check the operation.

b) Carefully check the mounting position aligning the hole of the unloader cover gasket [147] to the hole of the crankcase, and oil passage of the solenoid valve of the unloader cover [146].
Then, fasten the cover with bolts.

c) Mount the coil of the solenoid valve.

CAUTION

- **You should carefully check the mounting position of the unloader cover and unloader cover gasket, as any position error can lead to operational failure of the unloader.**

  To enable this check even after the assembly, the unloader cover is added with a marking to indicate the position of the oil supply hole (since May 2006).
  The unloader cover gasket is also provided with a tab to indicate the position of the oil supply hole (since September 2010).

- **In the case of K-series compressors to use ammonia refrigerant, there are some banks that are not implemented with the unloader mechanism. Because the same crankcase is used for the K-series compressors to use fluorocarbon refrigerants, an unloader cover with an oil supply hole (without a solenoid valve) is used even if the bank does not have an unloader mechanism. If the unloader cover of such a bank (without a solenoid valve) is opened, aligning the gasket to open the oil supply path can cause oil loss (i.e., increases oil consumption). As such, be sure to shift the position of the cover and gasket on the crankcase to block the oil supply path. Check the correct position by referring to the unloader cover (gasket) position markings shown in Figure 5-9 and Figure 5-10 in the next page.**

  Note that there may be a case where a bank with an unloader mechanism installed has an unloader cover without a solenoid valve, as an option.

  If an unloader cover without a solenoid valve is mounted when the unloader mechanism including the unloader piston is mounted, align the oil supply holes (not to block the path) for the assembly.

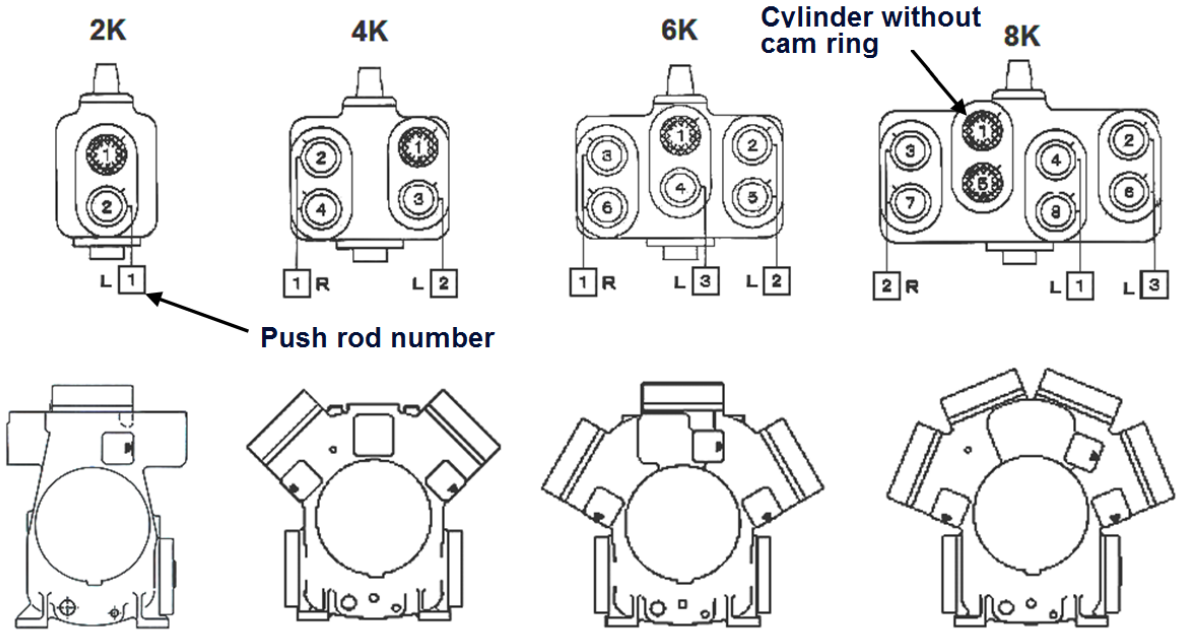

Figure 5-9 Marking (▾) of the unloader cover mounting position (for fluorocarbon refrigerants)

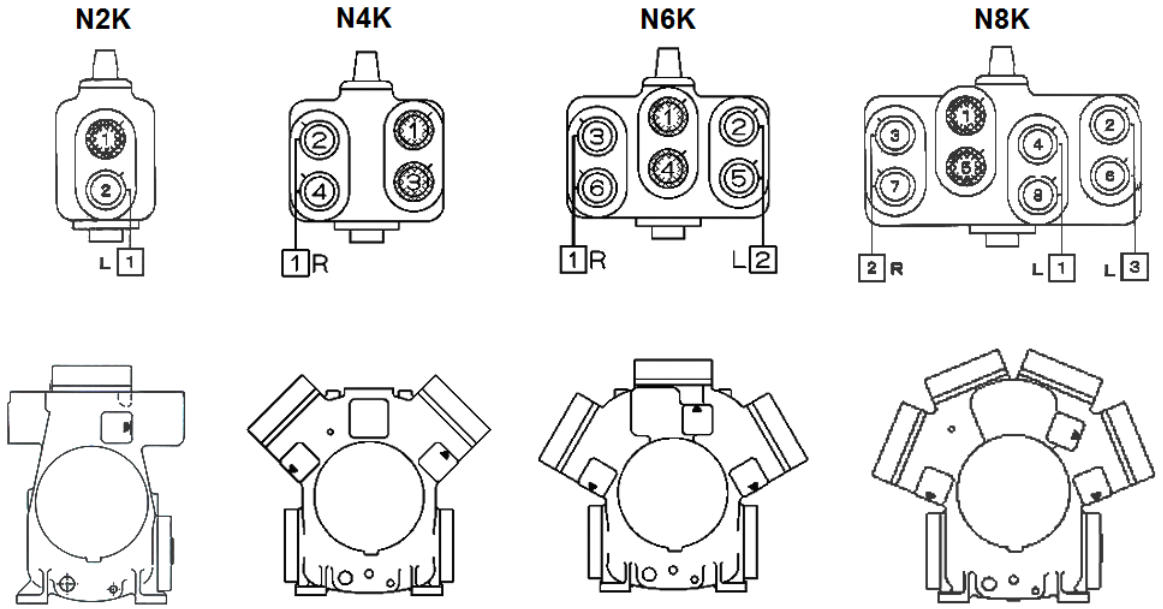

Figure 5-10 Marking (▾) of the unloader cover mounting position (for ammonia refrigerants)

5.5.11 Others

Make sure to clean and mount other parts that have been removed (e.g. suction filter).

Chapter 6 Troubleshooting

Table 6-1 Troubleshooting

■ The motor does not start

Symptom	Possible cause	Result	Action to take
The motor won't start with hum-sound	Motor failure	Circuit breaker is opened. Motor burnt out	Inspection, repair, or replacement
	The V-belts tension are too high.	Circuit breaker is opened. Motor burnt out.	Adjustment.
	Voltage drop	Circuit breaker is opened. Motor burnt out.	
	Failure or (near-)seizure of cylinder sleeve, piston, piston ring, or bearing metal (sealing) (If the pulley cannot be turned by hand after removing the belts.)	Motor burnt out. Seizure of sleeve, piston, and/or sealing device.	Inspection, repair, or replacement
	Poor or wrong wiring in the automatic control or (single phase) electrical system.	Burn-out of parts in the automated system or others.	Inspection and repair
No response when the magnet switch button is pressed.	The circuit breaker is opened.	Inoperable	Inspection and replacement
	Contact failure of the magnet switch, or protection switch is left activated.	Inoperable	Inspection, repair, or replacement
	Broken wire	Inoperable	Inspection, repair, or replacement
	After activation of OP (low oil pressure protection device) or HP (abnormal high pressure protection device), it is left as it is or not reset.	Inoperable	Reset the device.
The power turns on only when the magnet button is kept pressed.	Wiring error (in the automatic control system)	Inoperable	Inspection and repair
	Contact failure of any auxiliary contact, etc.	Inoperable	Inspection, repair, or replacement
The motor stops soon after the startup.	OP (low oil pressure protection device) has operated.	Inoperable Seizure of sliding surface of the compressor	
	(a) Insufficient amount of lubricating oil		(a) Supply oil.
	(b) Oil pressure is too low.		(b) Adjust the oil pressure.
	HP (abnormal high pressure protection) has operated due to excessively high discharge pressure.	Motor burn-out or inoperable	
	(a) The condenser is full of non-condensing gas.		(a) Purge non-condensing gas.
	(b) The suction pressure is too high.		(b) Reduce the load of refrigeration cycle.

■ The motor does not start (continued)

Symptom	Possible cause	Result	Action to take
The motor stops soon after the startup.	Due to liquid flow-back and mix the refrigerant into the crank chamber, the oil pressure cannot be increased, and OP (low oil pressure protection device) has operated.	Inoperable	Inspection, repair, or operation adjustment. Replace the lubricating oil in the crank case, or supply warm oil after sucking the refrigerant in the crank case using another compressor.
	Wiring error between automatic control system and magnet switch.	Burn-out of control system components.	Inspection and repair
	Overload relay has operated, or the bimetal temperature of OP (low oil pressure protection device) is high.	Unable to startup	Wait until the bimetal is cooled down (about 5 minutes). In the case of OP (low oil pressure protection device), switch to manual operation to startup the motor and switch back to automatic mode after 10 minutes. Note that the cause of the failure must be identified and corrected.

■ Abnormally high pressure

Symptom	Possible cause	Result	Action to take
The water cooled type condenser is warmer than normal	The flow of the cooling water is insufficient, or the water temperature is too high.	Operation of HP or safety valve, and increased power consumption	Increase the amount of cooling water, or lower the water temperature.
Head cover is overheated.	The flow of the cooling water is insufficient, or the cooling pipe is contaminated.	Operation of HP or safety valve, and increased power consumption	Adjust the amount of cooling water, or clean the cooling pipe.
Warm cooling water of the evaporator-condenser	Fan failure or clogging of spray nozzle or strainer	Reduced cooling capacity	Inspection, repair, or cleaning
The top of the condenser is warm, but the bottom is not. In addition, the crank case can easily get frosted.	The refrigerant or lubricating oil has accumulated in the condenser to reduce the cooling area.	Reduced cooling capacity	
	(a) Clogging between the condenser and receiver		(a) Inspection, adjustment, or removal of problem
	(b) Over charge of the refrigerant (refrigerant is contained in the condenser since the receiver is already full)		(b) Discharge the excess refrigerant.
The needle of the discharge pressure gauge swings and the condenser is somewhat warm.	(a) Air in the condenser, or failure of the discharge pressure gauge.	Reduced cooling capacity	(a) Purge the air from the air purge valve.
	(b) The oil separator is full of lubricating oil, closing the path of the gas.		(b) Discharge the excess lubricating oil.

■ Discharge pressure is too low

Symptom	Possible cause	Result	Action to take
The liquid pipe is frosted and suction pressure becomes vacuum	The liquid pipe or suction pipe is clogged.	Reduced capacity	Valve adjustment, inspection, and cleaning
The crank case is frosted, and the head cover is also cold.	Wet vapor compression due to excessive opening of the expansion valve (suction temperature is low due to liquid flow-back).	Vapor (liquid) compression may occur, and the discharge part of the compressor may be damaged.	Narrow the opening of the expansion valve while running the compressor.
Suction pressure is low, and some hissing sound is heard from the expansion valve.	Insufficient amount of refrigerant	No cooling	Fill the refrigerant.
Suction pressure is high.	Gas leakage due to wear of the suction plate valve, discharge plate valve, or piston ring.	Degraded capacity and burn-out of the sleeve	Inspection, repair, and/or replacement of the plate valve part and piston rings

■ Suction pressure is too high

Symptom	Possible cause	Result	Action to take
Crankcase is frosted.	The opening of the expansion valve is too wide.	Liquid compression	Operational adjustment (Narrow the opening of the expansion valve)
Increased current.	Increased load of the refrigeration cycle.	Motor over current or motor burnt out.	Operational adjustment
Discharge pressure is low. No frost on the suction side.	Degraded performance of the compressor (possible crack in the suction/discharge plate valve line, etc.) or gas leakage from the safety valve.	No cooling	Overhaul and parts replacement

■ Suction pressure is too low

Symptom	Possible cause	Result	Action to take
Cold room temperature or brine temperature is too high, compared with the level of suction pressure.	Insufficient amount of refrigerant or too narrow opening of the expansion valve.	No cooling	Charge the refrigerant or adjust the operational parameters.
Liquid flow-back occurs when the expansion valve is opened.	(a) Lubricating oil is contained in the cooling pipe. (b) Excessive formation of frost or ice on the cooling pipe	No cooling	(a) Discharge lubricating oil from the drain valve. (b) Remove the frost or ice.
Since the initial operation, the suction pressure has been too low for the cold room temperature or brine temperature.	The size of the cooling pipe and suction pipe is too small for the length or the pipe resistance is too high.	No cooling	Investigate and improve any errors in the design or piping work.
Suction pressure is lower than it was during the initial operation.	Clogging of the suction filter		Cleaning

■ Abnormal noise during operation

Symptom	Possible cause	Result	Action to take
Generation of continuous metallic noise	(a) Existence of foreign matter in the compression block. (b) Damaged discharge plate valve, suction plate valve, and/or piston ring.	Possible damage to the discharge and suction blocks	(a) Disassembly, repair, and/or replacement (b) Disassembly and replacement
High temperature in the bearing area	Wear, seizure, or damage of the metal	Possible damage in the compression block or bearing wear.	Disassembly and replacement (note that the oil supply pipe may be clogged)
	Damaged oil pump	Possible wear	Stop operation, investigate the cause, and replace the part.
Crankcase is frosted.	Liquid flow-back	Damage in the discharge block and piston or bearing wear	Stop operation, investigate the cause, and replace the part. Narrow the opening of the expansion valve while running the compressor. If liquid flow-back is very severe, first close the suction stop valve and gradually open it.
High discharge noise from the head cover	Oil compression	Damage in the discharge block and/or piston	Prevent oil loss (if it occurs together with liquid flow-back, also apply the above measures.)

■ Overheating of the crankcase

Symptom	Possible cause	Result	Action to take
Overheating of the head cover (when the discharge pressure is high and suction pressure is low)	Increased compression ratio (increased condenser temperature and/or refrigeration load)	Oil loss by burning and carbon stuck	Increase the amount of condenser cooling water or lower the water temperature.
	Carbonization of lubricating oil due to increased discharge temperature, accumulation of carbide, and the resulting blocking of the path of the gas.	Wear or damage of the metal (main bushing) or sleeve seizure	Disassembly, inspection, and cleaning or replacement
	Damaged discharge valve plate or gas leakage	Reduced cooling capacity	Disassembly, inspection, and replacement
	Gas leak from safety valve	Reduced cooling capacity	Decrease the discharge pressure or adjust the safety valve.
Increased oil temperature	Failure of oil cooler, insufficient lubricating oil, contamination of oil, or heating of pump due to clogging of oil filter.	Increased wear due to decreased oil viscosity	Clean oil cooler and increase cooling water. Replace lubricating oil. Clean the oil filter.
Impeded flow of the compressor jacket cooling water	Insufficient amount of cooling water or clogging in the water path	Wear or seizure of the metal and/or carbon attachment to the discharge block	Replace degraded lubricating oil, clean, and increase the cooling water.
The shaft seal part is especially hot.	Imminent seizure of the sliding part	Seizure or damage of the sliding part	Repair or replacement.

■ Excessive oil consumption

Symptom	Possible cause	Result	Action to take
Crankcase is easily frosted.	Lubricating oil foaming due to liquid flow-back. Particularly frequent during negative pressure operation.	Inoperable	Operational adjustment
No apparent abnormality is found	Closure of the pressure equalizing hole of the crankcase (or too wide opening in the case under the negative pressure operation) or clogging of the suction filter	Low oil pressure	Inspect and clean up the crankcase, or clean up the suction filter.
	Piston ring wear		Piston ring replacement
	Wear of the cylinder sleeve		Replacement
	Improper attaching of the piston rings		Reassemble them correctly.
	Missing to attach the pressure equalizing pipe		Attach it properly.
	Wear of the unloader piston		Replace the piston, or mount a rubber-lined special unloader piston
Head cover is overheated.	When the discharge temperature is increased, the amount of oil vapor increases.	Carbon deposit	Adjust the operation parameters to lower the discharge temperature.
The bottom of the separator can be touched by hand.	Clogged separator Failure of the float valve.	Low oil pressure	Inspection and adjustment
Oil level goes down after increased start/stop cycles	Too frequent start/stop cycles	Low oil level	Reduce the number of start/stop cycles.
Oil level goes down when unloaded	Phased unloading has not been performed (i.e., sudden unloading)	Foaming	Perform loading/unloading gradually.

■ No cooling

Symptom	Possible cause	Action to take
Suction pressure does not go down.	Insufficient capacity	
	(a) Compressor	(a) Inspect the system. If it is found normal, add more capacity.
	(b) Condenser	(b) Inspect the system. If it is found normal, add more capacity.
	Increased refrigeration load	If it is only a temporary increase, continue the operation. If it continues, add more capacity.
	Insufficient thermal insulation or degradation	Review, reconstruct, and/or repair
	Abnormally high pressure	Reduce the discharge pressure (increase flow of cooling water, add condenser, clean condenser, air vent, etc.)
	Gas leakage	Inspection and repair
Suction pressure is low (with no frost on the suction pipe, and it easily occurs liquid flow-back)	Overheated operation (excessive closure of the expansion valve)	Adjust (open) the expansion valve.
	Insufficient length of the cooling pipe.	Add capacity.
	Excessive frost on the cooling pipe.	Remove frost.
	Lubricating oil is contained in the cooling pipe.	Drain the oil.
	Aperture of the suction line	Rework on the piping
Discharge pressure is high	Insufficient cooling water or increased water temperature	Increase the water flow
	Insufficient capacity of the condenser	Add capacity.
	Contamination on the cooling surface of condenser	Cleaning
Discharge pressure is high (the bottom of the condenser is cold, the receiver is full)	Overcharging of the refrigerant	Discharge the refrigerant to a proper level.
	Clogging in the discharge line pipe	Remove the clogging. Rework on the piping
Excessive oil loss (increased discharge temperature)	Piston ring wear	Replacement
	Galling (seizure)	Inspection and repair
	Gas leakage	Inspection and repair

Chapter 7 Related Documents

7.1 Development Views

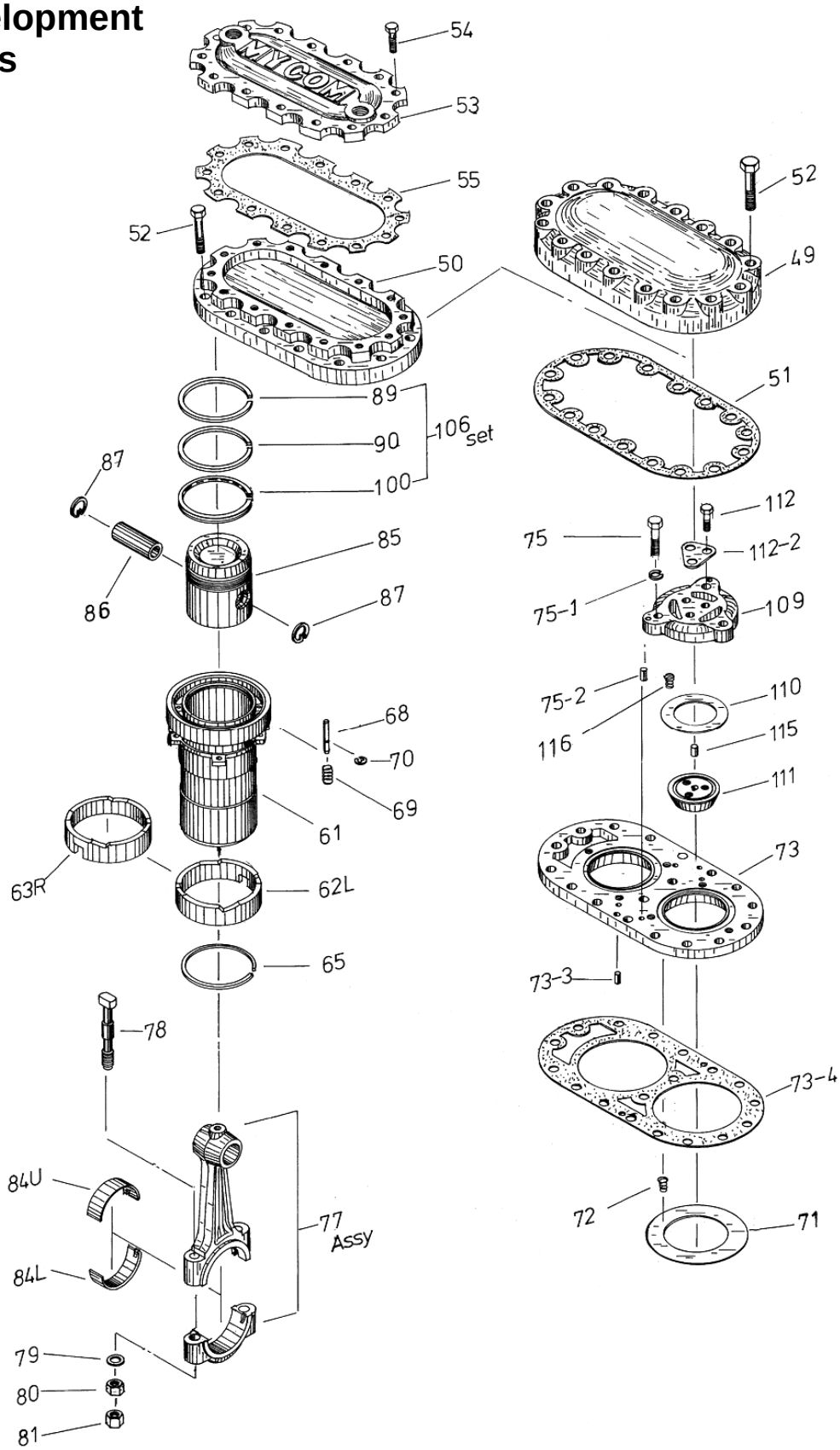

Figure 7-1 Development View around the Cylinder

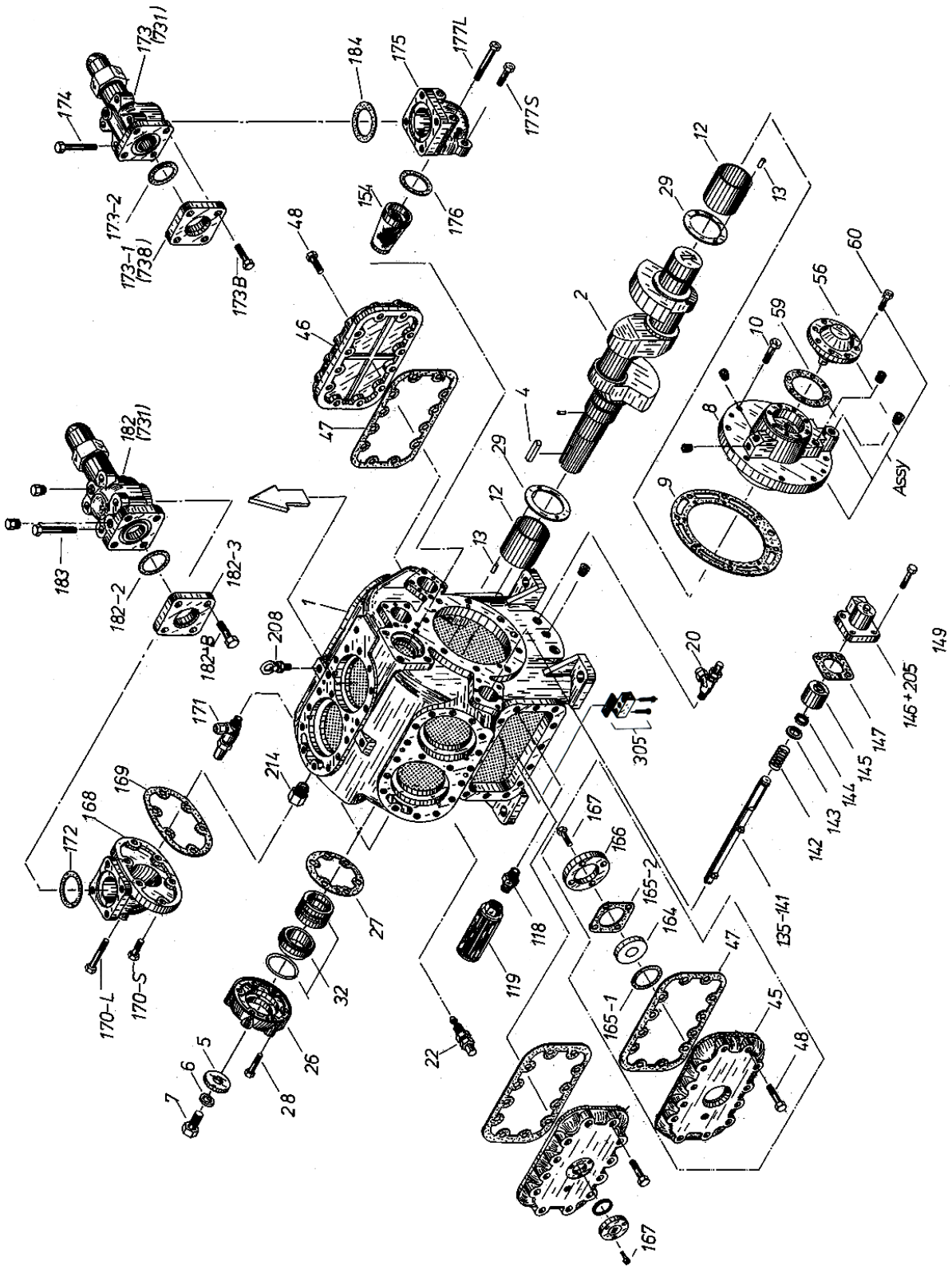

Figure 7-2 Development View around the Case (Representative View: 6K)

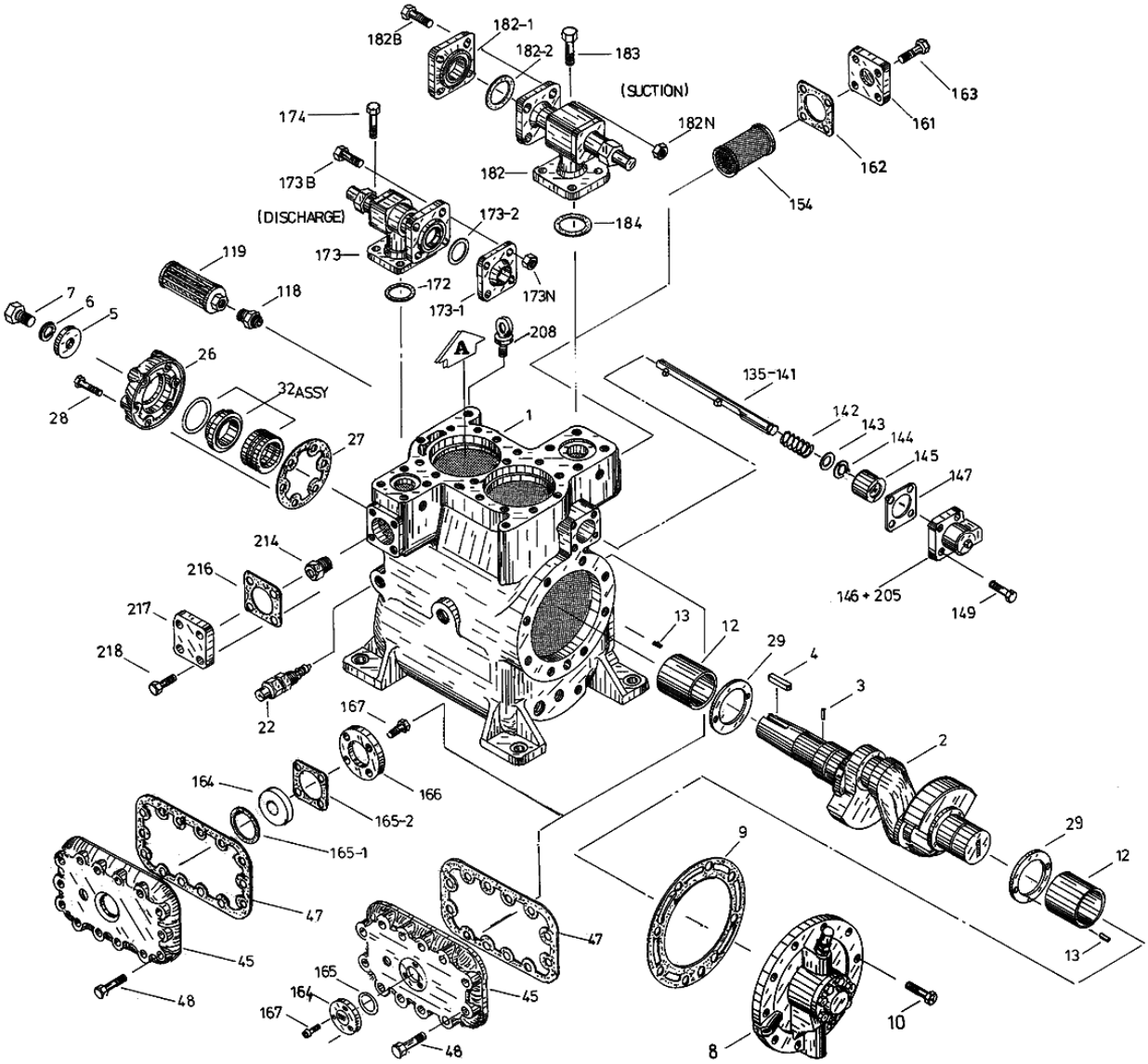

Figure 7-3 Development View around the Case (2K)

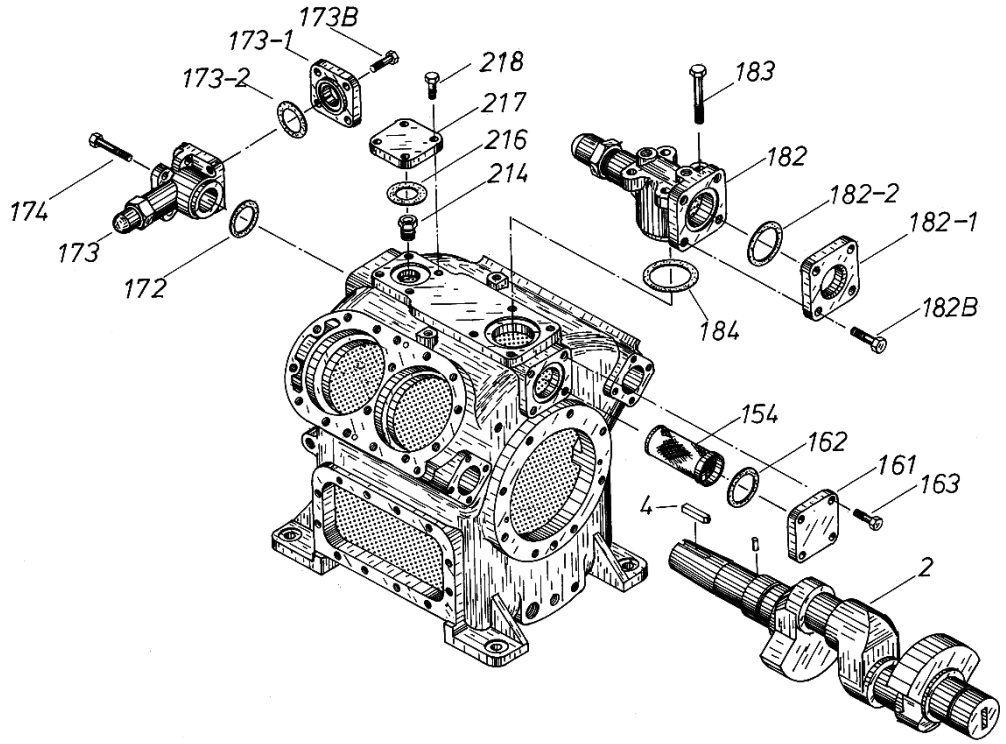

Figure 7-4 Development View around the Case (4K)

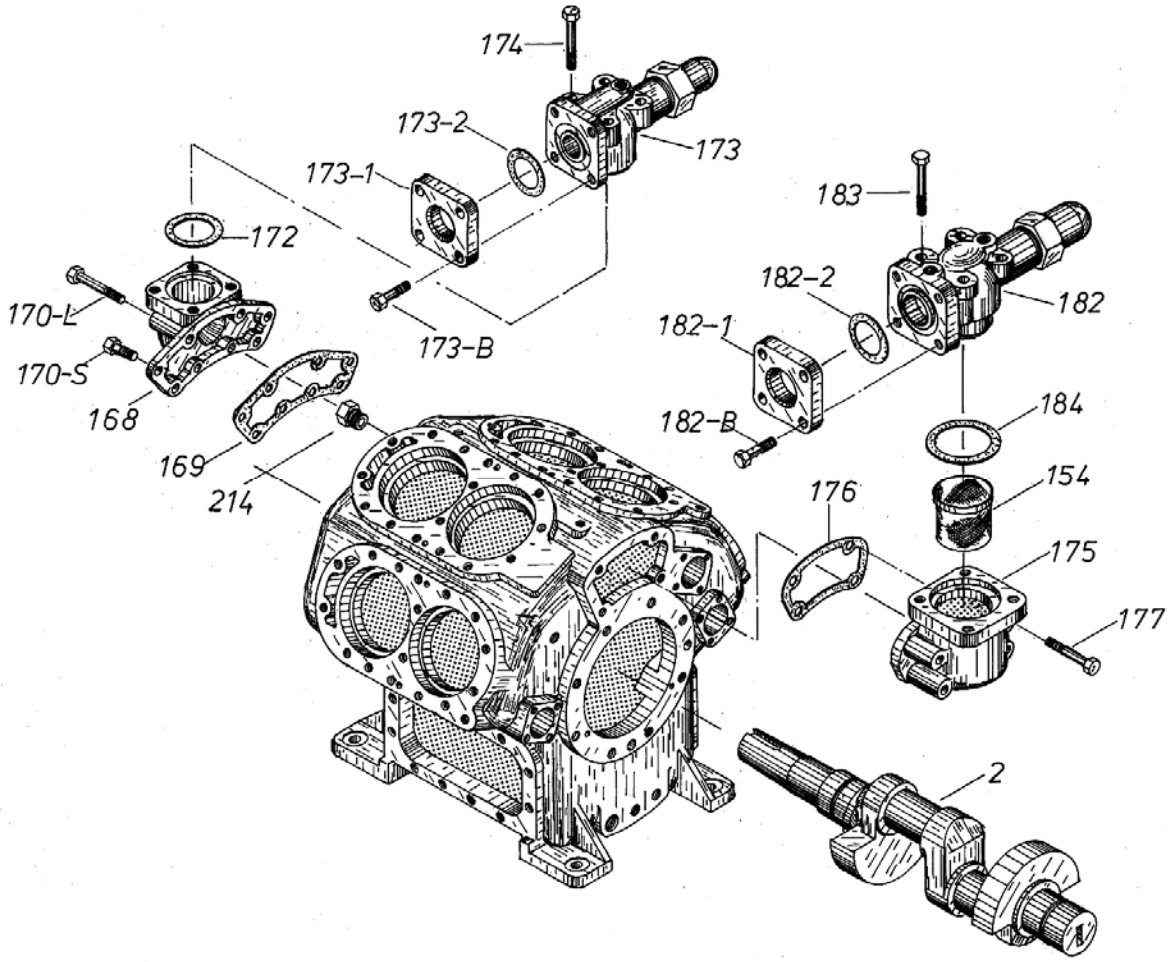

Figure 7-4 Development View around the Case (8K)

7.2 Parts Configuration Table

Table 7-1 Parts Configuration

P/N	Part Name	Code No.	Remarks	Q'ty			
				2K	4K	6K	8K
1	Crankcase	CR00100-K02	2K	1	-	-	-
1	Crankcase	CR00100-K04	4K	-	1	-	-
1	Crankcase	CR00100-K06	6K	-	-	1	-
1	Crankcase	CR00100-K08	8K	-	-	-	1
2	Crankshaft assembly (AL)	CR00209-ALK02	2K	1	-	-	-
2	Crankshaft assembly (AL)	CR00209-ALK04	4K	-	1	-	-
2	Crankshaft assembly (AL)	CR00209-ALK06	6K	-	-	1	-
2	Crankshaft assembly (AL)	CR00219-ALK08	8K	-	-	-	1
3	Spring pin, retainer drive	NE3203-008	Φ3×8	1	1	1	1
4	Pulley key C (same as model K)	CR00400-C	15×9.7×60 rounded at one end	1	1	1	1
5	Flat washer, pulley 60	CR00500-CK		1	1	1	1
6	Spring washer, pulley hub set bolt	ND320-020	M20	1	1	1	1
7	Hexagon head bolt, pulley hub	NB111020-050	M20×50	1	-	-	-
7	Hexagon head bolt, pulley hub	NB15520-050	M20×50	-	1	1	1
8	Bearing housing	CR00800-K	K with Oil pump	1	1	1	1
-	Bearing housing assembly with gasket	CR0089-K	K with gasket	1	1	1	1
9	Gasket, bearing housing	CR00900-K	K	1	1	1	1
10	Hexagon head bolt, bearing housing	NB111010-035	M10×35	8	-	-	-
10	Hexagon head bolt, bearing housing	NB15510-035	M10×35	-	8	8	8
12	Main bushing	CR01200-K	K	2	2	2	2
13	Main bearing screw (spring pin)	NE3204-008	Φ4×8 one side chamfered	4	4	4	4
22	Oil pressure regulating valve assembly	NL151-C	JO-6220	1	1	1	1
26	Shaft seal cover	CR77100-K	K	1	1	1	1
27	Gasket, shaft seal cover	CR77200-K	K	1	1	1	1
28	Hexagon head bolt, shaft seal cover	NB15508-035	M8×35	6	6	6	6
29	Thrust washer	CR02900-K	K	2	2	2	2
32	Mechanical seal assembly	CR03200-FK	(FKM)	-	-	-	-
32	Mechanical seal assembly	CR03200-NK	(NBR90)	-	-	-	-
32	Mechanical seal assembly	CR03200-KH	(HNBR)	1	1	1	1
45	Hand hole cover, with oil sight glass	CR04500-K01	K	-	1	1	1
46	Hand hole cover, without oil sight glass	CR04500-K02	K	1	1	1	1
47	Gasket, hand hole cover	CR04700-K	K	1	2	2	2
48	Hexagon head bolt, hand hole cover	NB15510-045	M10×45	12	24	24	24
49	Head cover	CR04900-K	K	1	2	3	4
50	Head cover (water cooled)	CR04900-KW	K	1	2	3	4
51	Gasket, head cover	CR05100-K	K	1	2	3	4
52	Hexagon head bolt, head cover	NB15510-045	M10×75	14	28	42	56
53	Head jacket cover (water cooled)	CR83202-K	K	1	2	3	4

P/N	Part Name	Code No.	Remarks	Q'ty			
				2K	4K	6K	8K
54	Hexagon head bolt, head jacket cover	NB15510-030	M10×30	14	28	42	56
55	Gasket, head jacket cover (water cooled)	CR05500-K	K	1	2	3	4
61	Cylinder sleeve	CR06100-K	K	2	4	6	8
61-1	Spring pin, cylinder sleeve	NE3203-008	Φ3×8	2	4	6	8
62	Cam ring (leftward sloped)	CR06200-KL		1	1	3	4
63	Cam ring (rightward sloped)	CR06200-KR		-	2	2	2
65	Retaining ring	CR06500-K	K	1	3	5	6
68	Lift pin	CR06800-K	Φ5×69.3	4	12	20	24
-	Lift pin set	CR0689-K	K 4pins/set	1	3	5	6
69	Spring, lift pin	CR06900-A	same as model A	4	12	20	24
70	Stop ring (E-ring), lift pin	NG13-E4	E4	4	12	20	24
71	Suction plate valve	CR07100-K	K	2	4	6	8
72	Spring, suction plate valve	CR11600-C	same as model C Cone-shaped type	8	16	24	32
72	Spring set, suction valve	CR0729-C	same as model C	2	4	6	8
73	Valve plate	CR07300-K	K/R	1	2	3	4
73	Valve plate	CR07300-NK	K/NH3	1	2	3	4
73-4	Gasket, valve plate	CR77800-K	K	1	2	3	4
73-1	Hexagon head bolt, valve plate	NB111010-025	M10×25	2	-	-	-
73-1	Hexagon head bolt, valve plate	NB15510-025	M10×25	-	4	6	8
73-3	Parallel pin, valve plate	NE2006-018	Φ6×18	2	4	6	8
75	Hexagon head bolt, discharge valve cage	NB111008-025	M8×25 -10.9	6	-	-	-
75	Hexagon head bolt, discharge valve cage	NB15508-025	M8×25	-	12	18	24
75-2	Parallel pin, discharge valve cage	NE2006-018	Φ6×18	4	8	12	16
77	Connecting rod assembly	CR07600-K	K	2	4	6	8
78	Hexagon head bolt, connecting rod	CR07800-K	K M10×81 Special	4	8	12	16
-	Hexagon head bolt set, connecting rod	CR0789-K	K	4	8	12	16
79	Washer, connecting rod	CR07900-K	K	4	8	12	16
80	Nut, connecting rod (No.1)	CR08000-K	K M10	4	8	12	16
81	Nut, connecting rod (No.2)	CR08000-K	K M10	4	8	12	16
84U/84L	Bearing halves	CR08400-K	K KP8-3 same as upper and lower	4	8	12	16
84	Bearing set (upper and lower)	CR0849-K	K	2	4	6	8
85	Piston	CR08500-ALKMH	AL K	2	4	6	8
86	Piston pin	CR08600-K	K Φ25×73	2	4	6	8
87	Lock spring, piston pin	NG11-025	H25	4	8	12	16
87	Lock spring se, piston pin	CR0879-C	same as model C	2	4	6	8
89	Piston ring (K, GA-P)	CR08900-KGAP	1st NH3	2	4	6	8
89	Piston ring (K, FC-P)	CR08900-KFCP	1st Freon	2	4	6	8
90	Piston ring (K, FC-P)	CR08900-KFCP	2nd	2	4	6	8
-	Piston ring (K, FC-PC-BFG1)	CR08900-KFCBFG1		-	-	-	-
-	Piston ring (K, FC-PC-BC3P)	CR08900-KFCBC3		-	-	-	-
106	Piston ring set	CR0899-K	K/R	2	4	6	8

P/N	Part Name	Code No.	Remarks	Q'ty			
				2K	4K	6K	8K
106	Piston ring set	CR0899-NK	K/NH3	2	4	6	8
108	Discharge plate valve assembly	CR10809-K	K/R	2	4	6	8
108	Discharge plate valve assembly	CR10809-KN	K/NH3	2	4	6	8
109	Discharge plate valve cage	CR10900-K	K/R	2	4	6	8
109	Discharge plate valve cage	CR10900-NK	K/NH3	2	4	6	8
110	Discharge plate valve	CR11000-K	K	2	4	6	8
111	Discharge valve seat	CR11100-K	K	2	4	6	8
112	Hexagon head bolt, discharge valve seat	NB15506-025	M6×25	6	12	18	24
112-2	Retainer (Turn stopper), hexagon head bolt for discharge valve seat	CR77900-K	K t=0.8	2	4	6	8
115	Parallel pin, discharge valve seat	NE2006-018	Φ6×18	2	4	6	8
116	Spring, discharge valve	CR11600-C	same as model C Corn -shaped type	12	24	36	48
-	Discharge valve and spring set	CR1169-C	same as model C	2	4	6	8
118	Hex head nipple	NF01-04	PT15A	1	1	1	1
119	Oil strainer（filter）	CR12300-C20	C #200	1	1	1	1
-	Oil strainer (filter) assembly	CR1239-C	C #200	1	1	1	1
135	Push rod, unloader device (1)	CR1350-K61	L=249	1	1	1	1
136	Push rod, unloader device (2)	CR1350-K62	L=273	-	1	1	1
137	Push rod, unloader device (3)	CR1350-K63	L=297	-	-	1	1
142	Spring, unloader device	CR14200-A	A	1	2	3	3
143	Washer, unloader push rod	CR14300-C	C 32×20×3	1	2	3	3
144	Stop ring, unloader push rod	NG12-020	S20	1	2	3	3
145	Unloader piston	CR14500-C	C	1	2	3	3
146+205	Unloader cover built in solenoid valve	CR14600-K	K	1	2	3	3
147	Gasket, unloader cover	CR14700-K	K	1	2	3	3
149	Hexagon socket head cap screw, unloader cover	NB35408-035	M8×35	4	-	-	-
149	Hexagon head bolt, unloader cover	NB15508-035	M8×35	-	8	12	12
154	Suction filter	CR15400-K	6K	-	-	1	-
154	Suction filter	CR15400-K2	2K	1	-	-	-
154	Suction filter	CR15400-K4	4K	-	1	-	-
154	Suction filter	CR15400-K8	8K	-	-	-	1
161	Safety cover, Suction filter	CR76600-K04	4K	1	1	-	-
162	Gasket, suction filter cover	CR77000-K4	4K	1	1	-	-
163	Hexagon head bolt, suction filter cover	NB15510-035	M10×35	4	4	-	-
164	Oil sight glass	CR16400-K	K2-020-006	1	1	1	1
165	O-ring, oil sight glass	CR16400-HK	HK (K) CR	1	1	1	1
165-1	Gasket, oil sight glass	CR16500-01	K old type	-	1	1	1
165-2	Gasket, oil sight gland	CR16500-02	K old type	-	1	1	1
166	Gland, oil sight glass	CR16600-K	K old type	-	1	1	1
167	Hexagon socket head cap screw, oil sight glass	NB35406-015	M6×15	3	3	3	3
167	Hexagon head bolt, oil sight gland	NB15508-025	M8×25 old type	-	4	4	4

P/N	Part Name	Code No.	Remarks	Q'ty			
				2K	4K	6K	8K
168	Discharge elbow	CR16800-K06	6K	-	-	1	-
168	Discharge elbow	CR16807-K08	8K	-	-	-	1
169	Gasket, discharge elbow	CR16900-K	6K	-	-	1	-
169	Gasket, discharge elbow	CR16900-K08	8K	-	-	-	1
170L	Hexagon head bolt, discharge elbow (1)	NB15510-100	M10×100	-	-	2	2
170S	Hexagon head bolt, discharge elbow (2)	NB15510-045	M10×45	-	-	4	6
172	Gasket, discharge service valve	PL0021-025N	ATK25A (Compressor side)	1	-	-	-
172	Gasket, discharge service valve	CR73900-K040	40A	-	1	-	-
172	Gasket, discharge service valve	CR73900-K050	50A	-	-	1	-
172	Gasket, discharge service valve	CR73900-K065	65A	-	-	-	1
173	Service valve, discharge	-	RTK25A (ATK used before 2009)	1	-	-	-
173	Service valve, discharge	CR73120-040	SRV. 40A	-	1	-	-
173	Service valve, discharge	CR73100-K040N	40A NH3	-	1	-	-
173	Service valve, discharge	CR73120-050	SRV. 50A	-	-	1	-
173	Service valve, discharge	CR73100-K050N	50A NH3	-	-	1	-
173	Service valve, discharge	CR73120-065	SRV. 65A	-	-	-	1
173	Service valve, discharge	CR73100-K065N	65A NH3	-	-	-	1
173-1	Mating flange, discharge service valve	-	RTK25A (ATK used before 2009)	1	-	-	-
173-1	Mating flange, discharge service valve	CR73800-K040	K 40A	-	1	-	-
173-1	Mating flange, discharge service valve	CR73800-K050	K 50A	-	-	1	-
173-1	Mating flange, discharge service valve	CR73800-K065	K 65A	-	-	-	1
173-2	Gasket, discharge flange	PL0021-025N	ATK25A（until 2008）	1	-	-	-
173-2	Gasket, discharge flange	PL0022-025N	RTK25A （thereafter 2009）	1	-	-	-
173-2	Gasket, discharge flange	CR18200-K040	K 40A	-	1	-	-
173-2	Gasket, discharge flange	CR18200-K050	K 50A	-	-	1	-
173-2	Gasket, discharge flange	CR18200-K065	K 65A	-	-	-	1
173B	Hexagon head bolt, discharge service valve	NB15512-040	M12×40	-	4	-	-
173B	Hexagon head bolt, discharge flange	NB15512-055S	M12×55	4	-	-	-
173N	Hexagon nut, discharge flange	NC140-12	M12	4	-	-	-
173B	Hexagon head bolt, discharge service valve	NB15516-040	M16×40	-	-	4	4
174	Hexagon head bolt, discharge service valve	NB15512-035	M12×35	4	-	-	-
174	Hexagon head bolt, discharge service valve	NB15512-100	M12×100	-	4	-	-
174	Hexagon head bolt, discharge service valve	NB15516-100	M16×100	-	-	4	-
174	Hexagon head bolt, discharge service valve	NB15516-130	M16×130	-	-	-	4
175	Suction elbow	CR17500-K06	6K	-	-	1	-
175	Suction elbow	CR17500-K08	8K	-	-	-	1
176	Gasket, suction elbow	CR73900-065N	CSV-65	-	-	1	-
176	Gasket, suction elbow	CR17600-K080	8K	-	-	-	1

P/N	Part Name	Code No.	Remarks	Q'ty			
				2K	4K	6K	8K
177	Hexagon head bolt, suction elbow	NB15516-140	M16×140	-	-	4	-
177	Hexagon head bolt, suction elbow	NB15516-120	M16×120	-	-	-	4
182	Suction service valve 32A	-	RTK32A (ATK used before 2009)	1	-	-	-
182	Suction service valve 50A	CR73120-050	SRV. 50A	-	1	-	-
182	Suction service valve 50A	CR73100-K050N	50A NH_3	-	1	-	-
182	Suction service valve 65A	CR73120-065	SRV. 65A	-	-	1	-
182	Suction service valve 65A	CR73100-K065N	65A NH_3	-	-	1	-
182	Suction service valve 80A	CR73120-080	SRV. 80A	-	-	-	1
182	Suction service valve 80A	CR73100-K080N	80A NH_3	-	-	-	1
182-1	Mating flange, suction service valve	-	RTK32A (ATK used before 2009)	1	-	-	-
182-1	Mating flange, suction service valve	CR73800-K050	K 50A	-	1	-	-
182-1	Mating flange, suction service valve	CR73800-K065	K 65A	-	-	1	-
182-1	Mating flange, suction service valve	CR73800-K080	K 80A	-	-	-	1
182-2	Gasket, suction service valve flange	PL0021-032N	ATK32A (until 2008)	1	-	-	-
182-2	Gasket, suction service valve flange	PL0022-032N	RTK32A (thereafter 2009)	1	-	-	-
182-2	Gasket, suction service valve flange	CR18200-K050	K 50A	-	1	-	-
182-2	Gasket, suction service valve flange	CR18200-K065	K 65A	-	-	1	-
182-2	Gasket, suction service valve flange	CR18200-K080	K 80A	-	-	-	1
182B	Hexagon head bolt, suction service valve flange	NB15516-045	M16×45	-	4	4	4
182B	Hexagon head bolt, suction service valve flange	NB15516-060S	M16×60	4	-	-	-
182B	Hexagon head bolt, suction service valve flange	NB15520-050	M20×50	-	-	-	4
182N	Hexagon nut	NC140-16	M16	4	4	4	4
182N	Hexagon nut	NC140-20	M20	-	-	-	4
183	Hexagon head bolt, suction service valve	NB15516-110	M16×110	-	4	-	-
183	Stud bolt, suction service valve	NB15516-140	M16×140	-	-	4	4
184	Gasket, suction service valve	PL0021-032N	ATK32A (Compressor side)	1	-	-	-
184	Gasket, suction service valve	CR73900-K050	K 50A	-	1	-	-
184	Gasket, suction service valve	CR73900-K065	K 65A	-	-	1	-
184	Gasket, suction service valve	CR73900-K080	K 80A	-	-	-	1
185	Oil cooler (water cooled)	CR18500-K	K	-	1	1	1
185	Oil cooler (water cooled)	CR18500-TAW	T-TCF0.15-0609P	1	-	-	-
185	Oil cooler (water cooled)	CR18500-TBW	T-TCF-0.25-0617P	-	-	-	-
-	Gasket, Oil cooler T-TCF cover A	CR18500-GA		1	-	-	-
-	Gasket, Oil cooler T-TCF cover B	CR18500-GB		1	-	-	-
205	Solenoid valve, unloader	KF711-XWM2	Spolan XWM 240V	-	2	3	3
208	Eyebolt	NB600-12	M12	2	2	2	2
214	Built-in safety valve	CR21400-K6	B566LD-300P	-	-	-	-
216	Gasket, built-in safety valve cover	CR21600-K04	4K	1	1	-	-
217	Cover, built-in safety valve	CR76600-K04	4K	1	1	-	-

P/N	Part Name	Code No.	Remarks	Q'ty			
				2K	4K	6K	8K
218	Hexagon head bolt, built-in safety valve cover	NB15510-040	M10×40	4	4	4	-
253 or 305	Gas equalizer	CR80700-01		1	2	2	2
254	Packing, gas equalizer	CR80800-01	t=1	1	2	2	2
253B	Hexagon head bolt, gas equalizer	NB12006-030	M6×30	2	4	4	4
253W	Fastening washer, gas equalizer	ND422-06B	M6	2	4	4	4
-	Cartridge heater	LF1204-220	MKCP-2204	-	-	-	-
-	V-pulley (flywheel)	CR70700-K06	Type 6K	-	-	-	-
-	Gasket set, F2K	CR7117-F2K		-	-	-	-
-	Gasket set, F4K	CR7117-F4K		-	-	-	-
-	Gasket set, F6K	CR7117-F6K		-	-	-	-
-	Gasket set, F8K	CR7117-F8K		-	-	-	-
-	Gasket set, N2K	CR7117-N4K		-	-	-	-
-	Gasket set, N4K	CR7117-N4K		-	-	-	-
-	Gasket set, N6K	CR7117-N6K		-	-	-	-
-	Gasket set, N8K	CR7117-N8K		-	-	-	-
-	Gasket, oval flange	CR71900-1	HF20	-	-	-	-
-	Indentation tools for main bushing	CR70300-K	K	-	-	-	-
-	Disassembling tool set	CR70400-K	K	-	-	-	-

7.3 Configuration of Plate Valves and Associated Parts

This section lists the configuration of various types of suction/discharge valves and associated parts according to the different types of refrigerant.

Table 7-2 Suction Plate Valve Components

Refrigerant	Suction /Discharge	Item Name	Specification	Item Code	
				Single	Set/Assembly
Fluorocarbon and Propane	Suction	Valve Plate	R Damper	CR07300-K	-
		Spring	Cone-shaped spring × 4	CR11600-C	CR0729-C
		Plate Valve	-	CR07100-K	-
	Discharge	Discharge Valve Cage	R Damper	CR10900-K	CR10800-K
		Spring	Cone-shaped spring × 6	CR11600-C	CR1169-C
		Plate Valve	-	CR11000-K	-
NH_3	Suction	Valve Plate	N Damper	CR07300-NK	-
		Spring	Cone-shaped spring × 4	CR11600-C	CR0729-C
		Plate Valve	-	CR07100-K	-
	Discharge	Discharge Valve Cage	N Damper	CR10900-NK	CR10800-KN
		Spring	Cone-shaped spring × 4	CR11600-C	CR0729-C
		Plate Valve	-	-	CR11000-K-

7.4 List of Tightening Torques for Bolts and Nuts

Table 7-3 Tightening Torques for Bolts and Nuts

Item Name	Size	Q'ty				Torque N·m (kg·cm)
		2K	4K	6K	8K	
Pulley set bolt Hexagon head bolt, suction service valve flange	M20×50	1 -	1 -	1 -	1 4	200 (2000)
Hexagon head bolt, suction elbow (1) Hexagon head bolt, suction service valve	M16×140	- -	- -	2 4	- 4	120 (1200)
Hexagon head bolt, discharge service valve	M16×130	-	-	-	4	
Hexagon head bolt, suction elbow	M16×120	-	-	-	4	
Hexagon head bolt, suction service valve Hexagon head bolt, discharge service valve	M16×110	- -	4 -	- 4	- -	
Hexagon head bolt, suction service valve flange	M16×60	4	-	-	-	
Hexagon head bolt, suction elbow (2)	M16×50	-	-	2	-	
Hexagon head bolt, suction service valve flange Hexagon head bolt, discharge service valve flange Hexagon head bolt, suction service valve	M16×45	- - 4	4 - -	4 4 -	4 4 -	
Hexagon nut, suction service valve flange	M16	4	-	-	-	
Hexagon head bolt, discharge service valve	M12×100	-	4	-	-	80 (800)
Hexagon head bolt, discharge service valve flange	M12×55	4	-	-	-	
Hexagon head bolt, discharge service valve flange	M12×40	-	4	-	-	
Eye bolt	M12	2	2	2	2	–
Hexagon head bolt, discharge elbow (1)	M10×100	-	-	2	2	60 (600)
Connecting rod fastening bolt (Special bolt)	M10×81	4	8	12	16	
Hexagon head bolt, head cover	M10×75	14	28	42	56	
Hexagon head bolt, hand hole cover Hexagon head bolt, discharge elbow (2)	M10×45	12 -	24 -	24 4	24 6	
Hexagon head bolt, suction filter cover Hexagon head bolt, built-in safety valve cover	M10×40	4 4	4 4	- -	- -	
Hexagon head bolt, bearing housing	M10×35	8	8	8	8	
Hexagon head bolt, valve plate	M10×25	2	4	6	8	
Nut, connecting rod (No.1)	M10 Small nut	4	8	12	16	45 (450)
Nut, connecting rod (No.2)	M10 Small nut	4	8	12	16	30 (300)
Hexagon head bolt, shaft seal cover Hexagon head bolt, unloader piston cover	M8×35	6 4	6 8	6 12	6 12	
Hexagon head bolt, discharge valve cage	M8×25 for Freon	6	12	18	24	
Hexagon head bolt, gas equalizer	M6×30	2	4	4	4	–
Hexagon head bolt, discharge valve sea	M6×25	6	12	18	24	10 (100)
Hexagon socket head cap screw, oil sight glass	M6×15	3	3	3	3	

7.5 Criteria for Replacement of Parts

7.5.1 Suction filter and Oil filter

When cleaning the wire mesh, check for any broken mesh or separation of soldered parts.
If any defect is found, be sure to replace it with a new one.

- If any foreign matter is caught in the fine mesh and cannot be removed, apply compressed air from the downstream side against the liquid flow to blow it out.
- The oil filter is a corrugated cylindrical filter with a wide passage area.
  If any clogging is found, use compressed air to blow it out from the inside of the filter element.

7.5.2 Crankshaft

CAUTION

- Padding of the crankshaft cannot be made due to the nature of the material. Any padding (ex.: by welding or plating) can cause the crankshaft to break.

a) Check that each bearing point of the crankshaft is not excessively worn. A significant wear will develop a step between the sliding part and the non-sliding part of the bearing part. Check for any step visually or by touching the surface.

b) Use a micrometer to measure the shaft diameter at various worn points of the bearings. If the measured diameter is less than the use limit shown in the table below, replace the crankshaft.

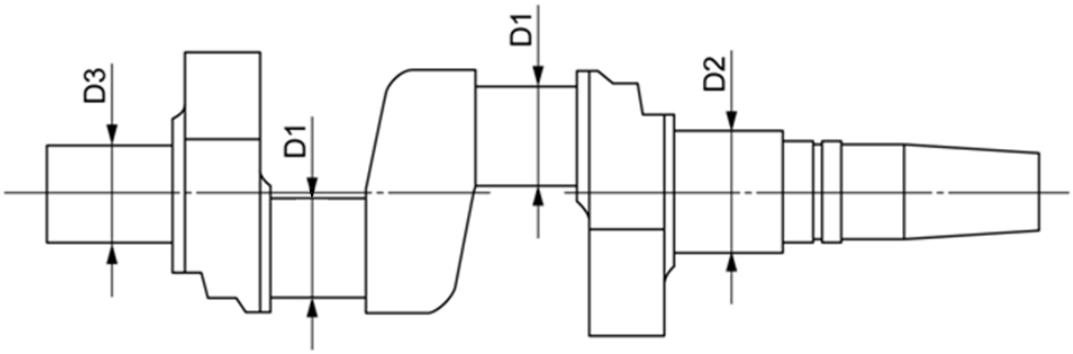

(mm)

Measurement Point		Nominal Dimension	Use Limit
Crank pin part	D1	60	59.88
Main bushing part	D2	70	69.88
	D3	70	69.88

c) Check that there is no flaw on each sliding surface of the crankshaft. If any flaw is found, use a piece of sandpaper (#800 or finer) or grind stone to correct the flaw.

d) Remove all plugs attached to the crankshaft and clean the oil holes. After they have been cleaned, check that oil can flow through the holes. Attach each plug as soon as the check is done. Missing to attach any plug can result in a seizure accident due to insufficient oil pressure.

e) Check that the shaft seal attachment part of the crankshaft is free from any flaw. If any flaw is found, use a piece of sandpaper (#800 or finer) or fine oilstone to correct the flaw.

7.5.3 Shaft Seal

a) Inspect the sliding surface of the stationary ring (floating seat in the shaft seal cover) and rotating ring (seal ring on the crankshaft).

b) If any cracks or other damage is found, replace the mechanical seal assembly with a new one.

c) Two O-rings are used. Be sure to replace them at the time of overhaul.

- O-ring for seal ring: JIS B 2401-1 G55 HNBR (standard)
- O-ring for floating seat: JIS B 2401-1 P65 HNBR (standard)

7.5.4 Piston, Piston Pin, and Piston Ring

a) Check the piston for flaws mainly on the outer surface. If any flaw is present, correct it using a grindstone. The direction of grinding shall be perpendicular to the sliding direction.

b) Measure the outer diameter of the piston skirt.
If the measured diameter is less than the use limit, replace the piston with a new one.

(mm)

Measurement Point	Nominal Dimension	Use Limit
Outer diameter at the piston skirt	85	84.80

c) Measure the outer diameter of the piston pin at three places.
If any of the measured outer diameter is less than the use limit, replace the piston pin with a new one.

(mm)

Measurement Point	Nominal Dimension	Use Limit
Outer diameter	25	24.85

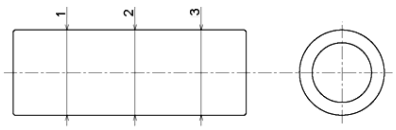

d) The piston pin is fit loose into the piston pin hole. Measure the gap and if it exceeds the service limit, replace either piston or piston pin, whichever presenting a severer wear.

(mm)

Measurement Point	Nominal Dimension	Use Limit
Gap between the piston pin and the hole	0.007 to 0.026	0.15

e) For piston rings, besides checking the condition of the outer sliding surface including any flaw or abnormal wear, check the normal wear at the same time.
To check the condition of wear, measure the gap between both ends of the piston ring.
For this, place the piston ring at the distance of 3 mm from the top of the cylinder sleeve and measure the gap. If the measured gap exceeds the use limit, replace the piston ring.

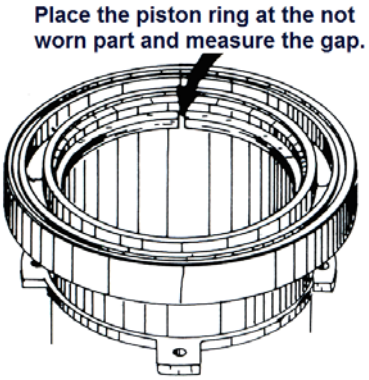

(mm)

Measurement Point	Nominal Dimension	Use Limit
Gap between both ends	0.15 to 0.35	1.5

【NOTE】

- The piston rings must be replaced at the recommended intervals even though the wear does not exceed the use limit yet.

f) If any burr (circular ridge) is formed on the top and bottom of the sliding surface of the piston ring, use a grind stone or other tool to chamfer the edges before using it.

Depending on the use condition, the piston ring grooves may also be worn out. When the wear exceeds the use limit (gap between the groove wall and a new piston ring is 0.15 mm), it may cause oil loss, and thus replace the piston.

7.5.5 Connecting Rod Bearing Halves

a) Check the sliding surface of the large end bearing halves. If the metal wear particles and debris embedded is found,, replace the bearing halves. If the crankshaft is worn, be particularly careful to inspect the metal surface.

b) Also be careful about the tension of the bearing halves. The internal radius of the bearing halves is larger than the internal radius of the large end of the connecting rod, when they are manufactured. As it is designed to make a perfect circle only after the top and bottom halves are combined together and tightened, the measurement between the ends of disassembled bearing halves should become longer due to the tension. If this tension is not present, replace the bearing halves even if they are not worn.

c) If the gap between the crank pin and bearing halves exceeds the use limit, replace them.

d) If the gap between the piston pin and the small end pin hole of the connecting rod exceeds the use limit, replace them.

(mm)

Measurement Point	Nominal Dimension	Use Limit
Gap between the crank pin and bearing halves	0.020 to 0.079	0.20
Gap between the piston pin and the small end pin hole of the connecting rod	0.027 to 0.054	0.15

7.5.6 Cylinder Sleeve

a) Inspect the upper surface of the suction valve seat. If any flaw is found, correct the flaw by polishing or grinding.

b) Measure the height of the seat part. If the measurement value is less than the use limit, replace the cylinder sleeve.

(mm)

Measurement Point	Nominal Dimension	Use Limit
Height of the seat part	0.5	0.2

c) If the inside surface of the cylinder sleeve has any flaw, use fine GC grinding stone or fine sandpaper to correct the defect.

d) Measure the gap between the cylinder inner wall and the piston skirt part. If the gap exceeds the use limit, replace the piston.

(mm)

Measurement Point	Nominal Dimension	Use Limit
Gap between the cylinder inner wall and the piston skirt	0.080 to 0.132	0.3

e) The part 10 to 20 mm from the top end of the cylinder sleeve is most likely to be worn.
Measure the internal diameter of the cylinder sleeve. If the measurement value exceeds the use limit, replace it with a new one.

(mm)

Measurement Point	Nominal Dimension	Use Limit
Internal diameter of cylinder sleeve	85	85.2

7.5.7 Discharge Valve Assembly and Suction Valve Assembly

The discharge plate valve, suction plate valve, and valve springs must be regularly replaced.
While the service life depends on the conditions of use, refer to Chapter 5, Sections 5.2.3.1 in this manual for the typical replacement intervals.

a) Measure the thickness of the seat part. If the wear on the seat part exceeds 0.15 mm than the standard 1.0 mm (less than 0.85 mm), the valve needs to be replaced even if it has not reached the typical replacement period.
b) Even if the seat part is not excessively worn, replace the valve if the spring mating surface is unevenly worn or distorted. If any flaw exists, it should be replaced as it may develop a crack due to cyclic fatigue.
c) Measure the seat height of the valve plate and discharge valve seat.
If the seat height becomes 0.3 mm (0.2 mm worn), replace the valve plate and discharge valve seat.

7.5.8 Springs

a) If any broken spring is found, also inspect the bottom of the spring hole of the valve plate and discharge valve cage. A broken spring can hit the bottom of the hole and deepen it. If thus phenomenon is found, replace the valve plate and/or discharge valve cage.
b) Measure the free length of each spring. If the free length is 10% or more shorter than the appropriate value given in the table below, replace the spring with a new one.

(mm)

Name of Spring	Standard Dimensions (Free length x coil dia. x outer dia.)
Discharge valve spring	10 x t 0.2 x Φ 6 (maximum)
Suction valve spring	
Lift pin spring	10 x Φ 0.5 x Φ 6.3
Unloader device spring	72 x Φ 2.8 x Φ 32.3

7.5.9 Main Bushing and Thrust Washer

a) If the gap between the main bushing and the crankshaft exceeds the use limit, replace them.

(mm)

Measurement Point	Nominal Dimension	Use Limit
Gap between the main bushing and the crankshaft	0.040–0.139	0.3

b) If the inner wall of the main bushing is worn over the use limit, replace it.

(mm)

Measurement Point	Nominal Dimension	Use Limit
Inner diameter of the main bushing	70	70.15

c) Measure the thickness of the thrust washer. If measurement value is less than the use limit, replace it.

(mm)

Measurement Point	Nominal Dimension	Use Limit
Thickness of the thrust washer	2.95–3.05	2.8

7.5.10 Oil Pump

If the oil pressure is still low when the oil pressure control valve is closed during operation, and it is not due to the clogging of the oil filter, the gear, metal, and/or shaft of the oil pump may be worn.

To inspect the oil pump, remove the oil pump from the compressor. Then, hold the pump shaft and check if there is any play in the axial and/or radial direction. If any play is felt by hand, it is necessary to replace the bearing housing assembly.

7.5.11 Bolts

The connecting rod fastening bolts and discharge valve fastening bolts must be carefully and thoroughly inspected.

In particular, these bolts must be very carefully checked after any oil compression, liquid compression, or seizure accident.

If any defect is found on the thread, be sure to replace it.

7.5.12 Gaskets and O-rings

All gaskets and O-rings must be replaced with new ones whenever disassembly and inspection is performed.

While O-rings are made of synthetic rubbers, the most suitable material may differ according to refrigerant and lubricating oil to be used, and actual operational conditions.

In the case of the standard specifications, regardless of the refrigerant used, HNBR O-rings are used on mechanical seal assembly and CR O-ring is used to oil sight glass.

Do not use FKM-(Viton) O-rings to the ammonia refrigerant absolutely. O-rings are cured in a short period of time, Leakage of refrigerant occurs.

■ Gasket List

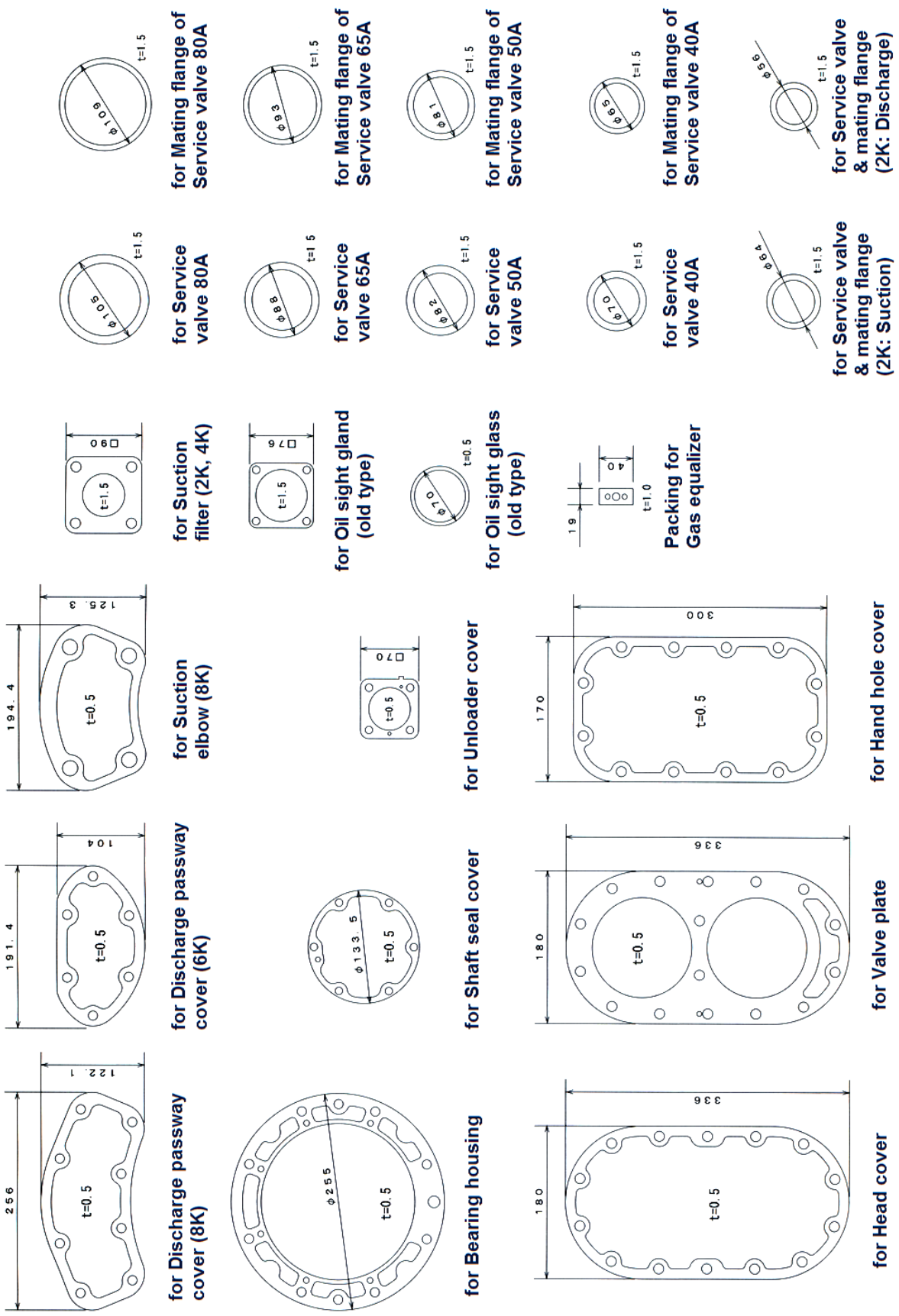

Figure 7-6 Gasket List

7.6 Standard Assembly Clearance

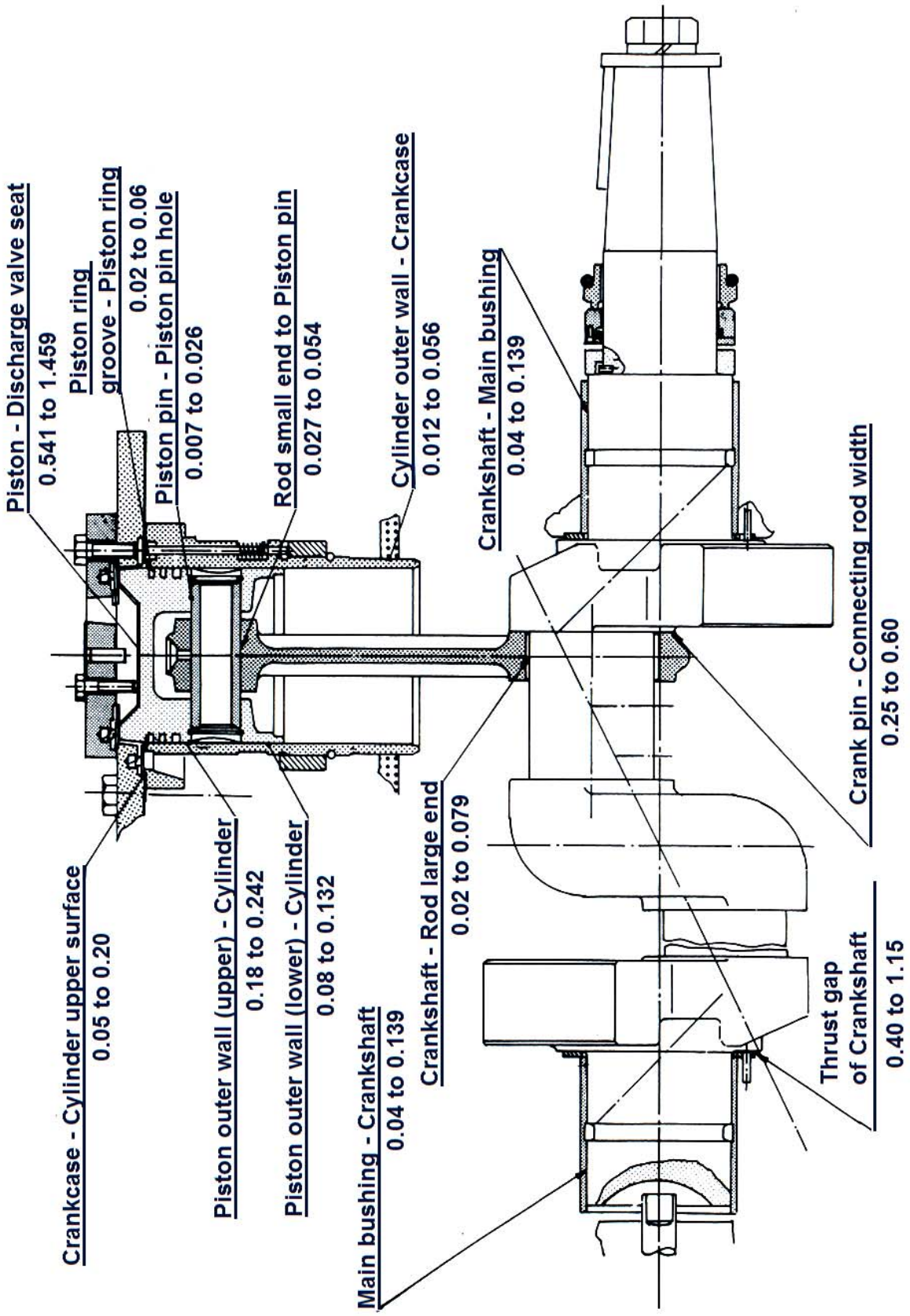

Figure 7-7 Standard Initial Assembly Clearance (Unit: mm)

7.7 Disassembly Tools

The following list shows the disassembly tool set given in Table 7-1 "Parts Configuration Table" in this Chapter.

Table 7-4 Items Included in the Disassembly Tool Set

Name	Outline	Specification	Qty	Remarks
Socket Wrench Box		Across flats 13 mm	1	
		14 mm	1	
		17 mm	1	
		24 mm	1	
Nut spinner handle		300 mm, 12.7 square	1	
Single ended wrench		8 mm	1	For gas equalizer
		23 mm	1	For oil filter
Pulley extractor		Bolts M16 × 40: 1 pcs M10 × 50: 2 pcs	1 set	
Extension bar		152 mm, 12.7 square	1	
Ratchet handle (wrench)		1/4"	1	For JO valve
Sponge		20 × 160 × 160 mm	1	For cleaning

Appendix: Basic Points of Compressor Packaging Work

This appendix describes the basic points of design and manufacturing for the packaging work using K-series compressor.

1. Basic Flow of the Package Unit

Figure app-1 is the reference flow of the package unit using K-series compressor.

Because regulations of the refrigerating system vary according to the use area, at the time of packaging, make sure that equipment configuration and operation control flow conform to the regulations in your area.

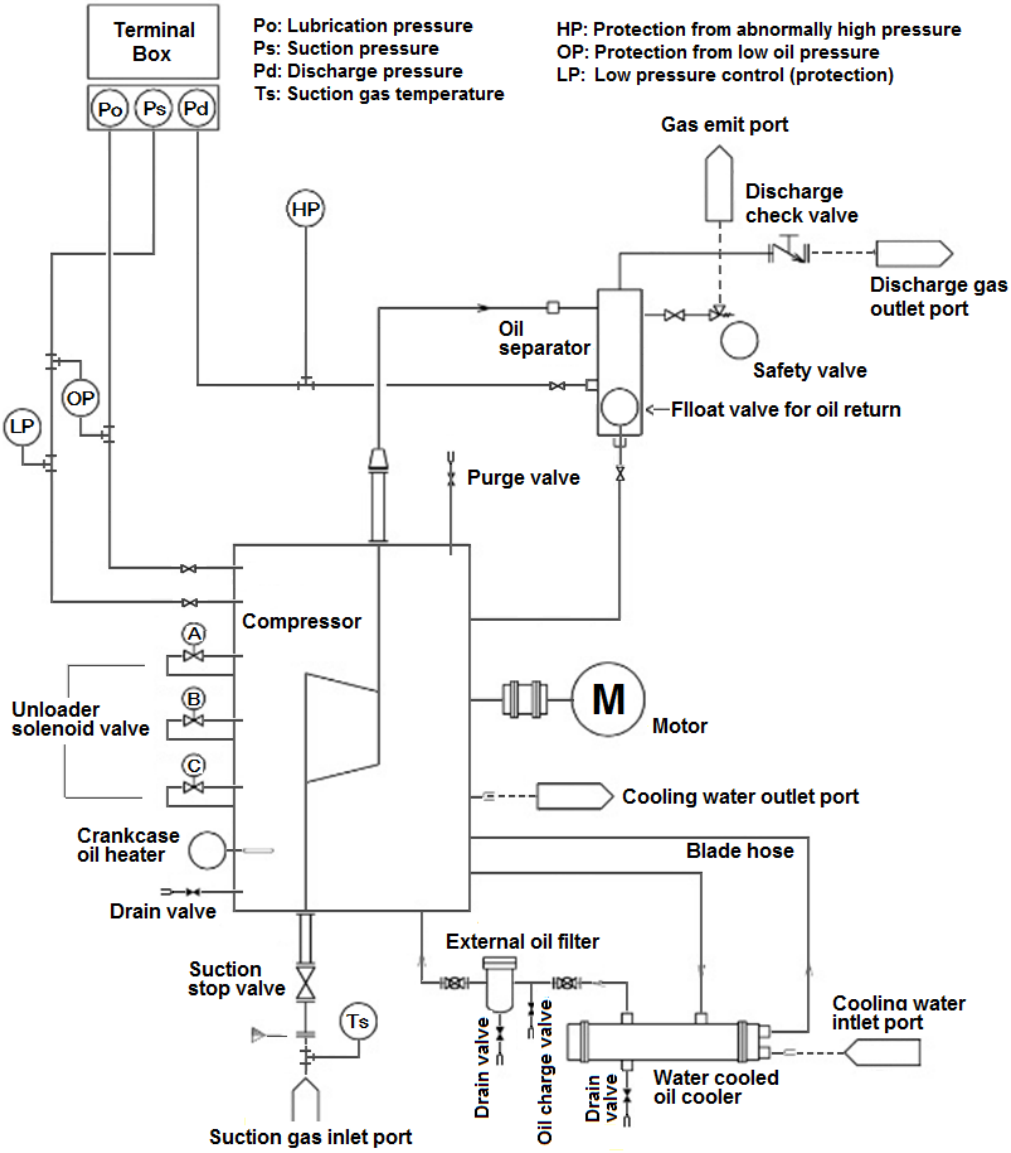

Figure app-1

The main components are as follows.

- **Refrigerant Line**: Suction stop valve, Discharge stop valve, Oil separator, Discharge check valve, Safety valve
- **Lubrication Line**: Oil cooler, External oil filter, Unloader solenoid valve
- **Instrumental Devices** : Discharge pressure gauge, Suction pressure gauge, Lubrication pressure gauge
- **Driving Devices**: Motor, Coupling

2. Refrigerant Line

Figure app-2 is around suction gas port of the package unit. Install the measurement device for the suction gas temperature onto the plant side piping since K-series compressors have no port to install the thermometer.

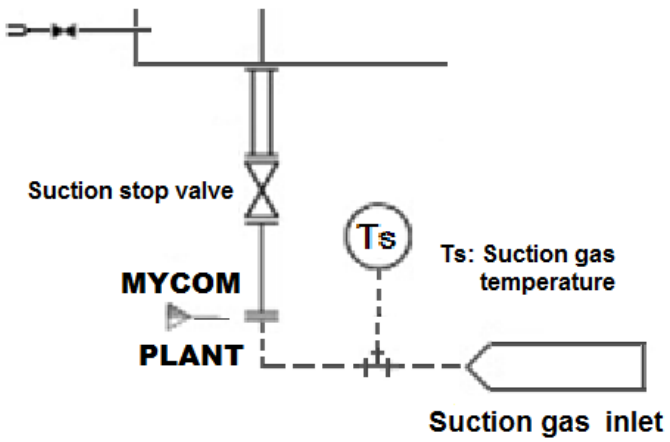

Figure app-2

Figure app-3 is around the discharge gas outlet port of the package unit. In this Figure app-3 case, the compressor discharge port is connected directly to the oil separator without a valve.
Install the check valve on the gas out let port of the oil separator. The check valve prevents the back flow from the condenser.
In the same way of the suction gas port block, the gas out let port block does not have a port to install the thermometer. Thus, install the measurement device for the discharge gas temperature onto the plant side piping.

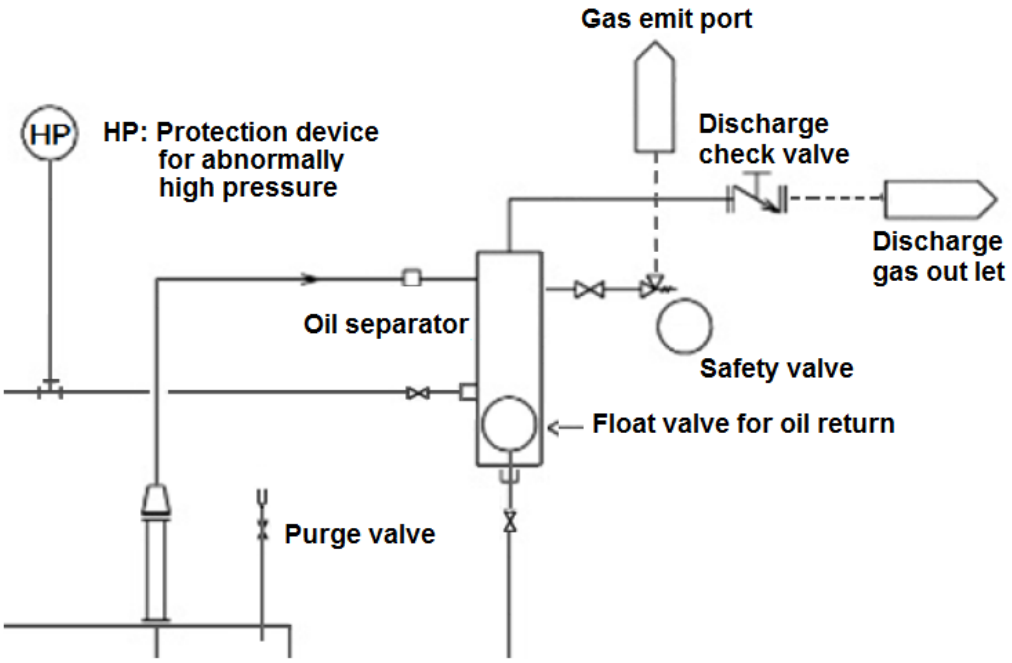

Figure app-3

3. Lubrication Line

Figure app-4 is the lubrication line of the package unit.
Install the oil filter onto the downstream side lubrication line of both the oil charge valve and the oil cooler.

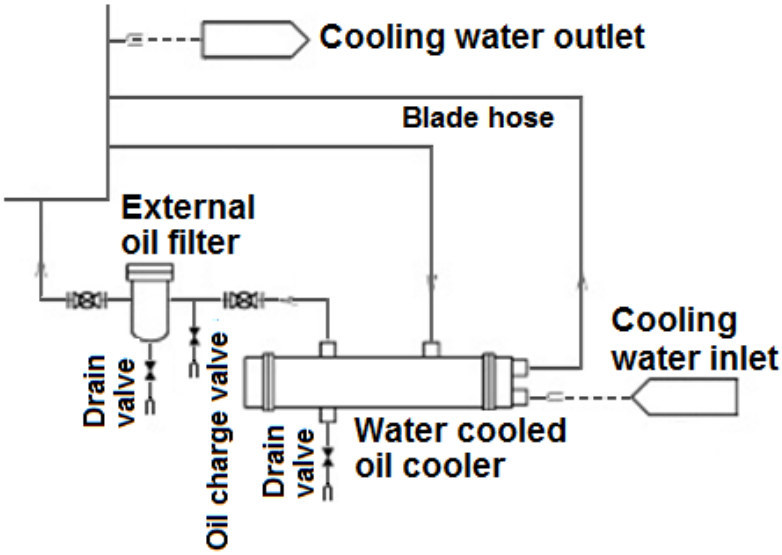

Figure app.-4

4. Instrumental Devices

Figure app-5 is the pressure connection ports of the compressor (example: 6K). For the details of each K-series compressor model, refer to Section 2.3.3 “Outer Dimensions” in this manual Chapter 2.

Connect to each instrumental device from each connecting port using pressure piping. Install the valves if necessary.

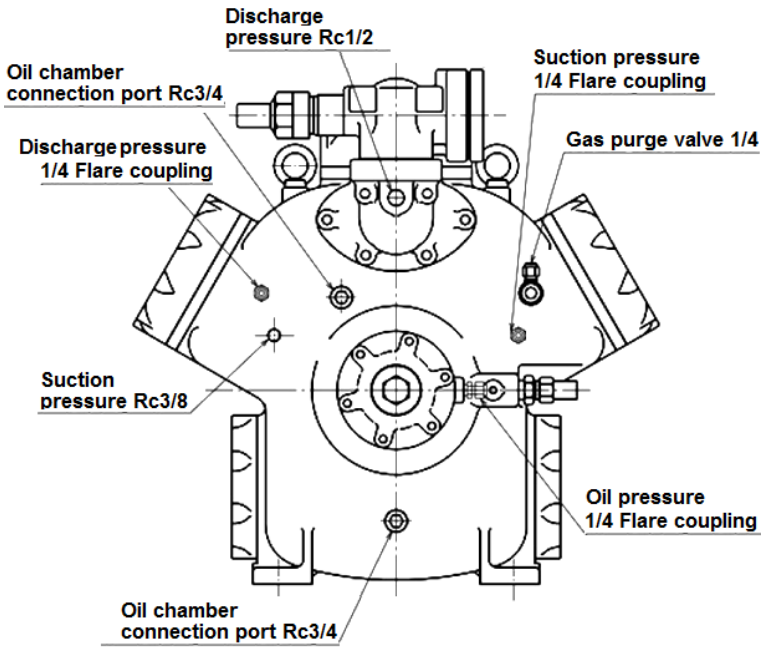

Figure app-5

Figure app-6 is the example flow around the pressure gauges. In this example flow, the discharge pressure is taken from the oil separator. Also it can be taken from the compressor as shown in Figure app-5.

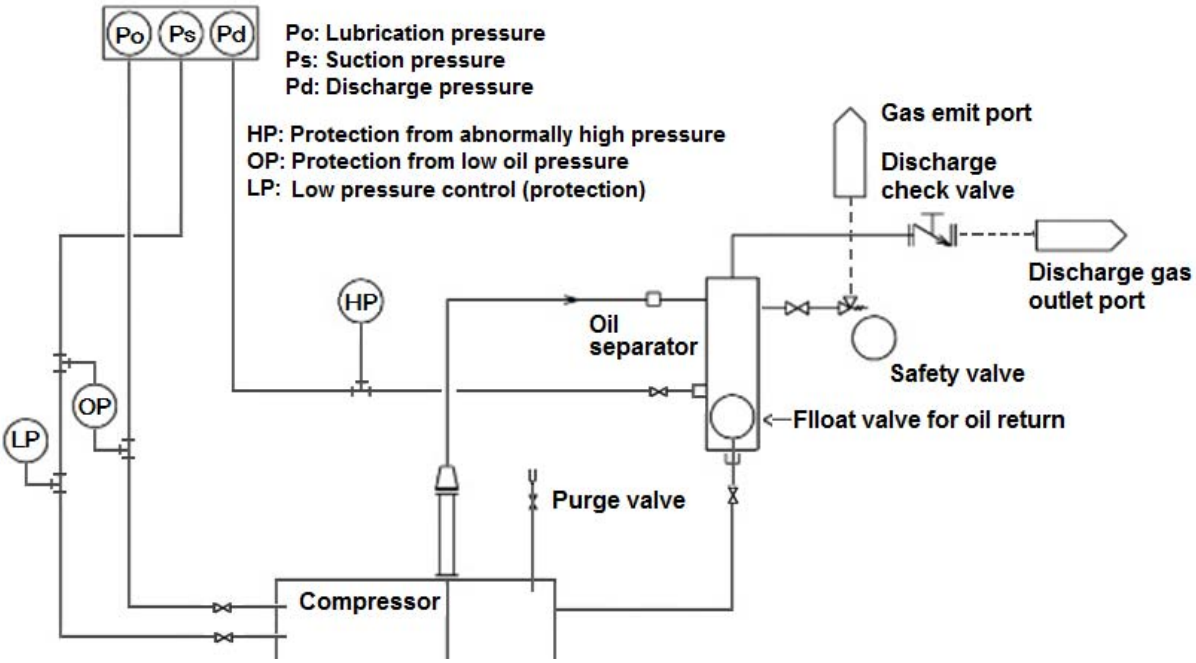

Figure app-6

5. Driving Devices

You can select the driving method for the K-series compressor from direct drive and belts drive.

Whichever rotation direction CW and CCW can be applied since there is no direction limit of the shaft rotation.

In the case of belts drive, wedge belts 5V is used.

In the case of direct drive, form flex type coupling is used.

6. Protection Devices

Compressor package unit requires protective devices to prevent damage to the components.
Install the necessary protective devices in accordance with applicable law.

In addition, the range of operation, in accordance with applicable law, the installation of safety valve is also required.

Please refer also to Section 1.4 in this manual Chapter 1..

7. Power Supply and Control Devices

An example of a standard power control circuit diagram (star-delta starting) is shown in Figure app-7a and Figure app-7b.

In the package unit using K-series compressor, you can choose a variety of motor starting method such as star-delta starting, using a frequency inverter, , using a soft starter, etc. according to the type of motor.

When selecting wires, electromagnetic contactors and fuses, ask their information to the motor manufactures and adopt proper ones to the motor specifications.

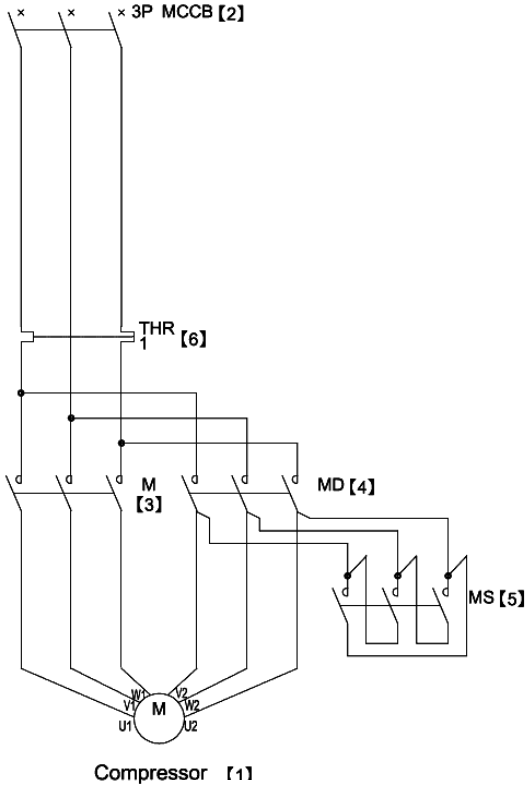

Figure app-7a

Reference:

[1]: Main Motor **[2]**: Main Power Source Switch
[3]: Electromagnetic Contactor (main)
[4]: Electromagnetic Contactor (delta)
[5]: Electromagnetic Contactor (star)
[6]: Thermal Switch [7]: Control Power Source Switch
[8]: Various Control Contact (other control circuit)

Note: [9] , [10] and [11] are Contacts
[9]: Protection from Low Oil Pressure
[10]: Protection from abnormally High Discharge Pressure
[11]: Suction Pressure Rise
[12]: Switch for Operation Stop [13]: Switch for Operation Start
[14]: Relay for Operation Start/Stop [15]: Star-Delta Timer
[16]: Relay for Confirmation of Compressor Start-up [17]: Solenoid Valve for Capacity Control
[18]: Timer for Protection from Motor Re-starting

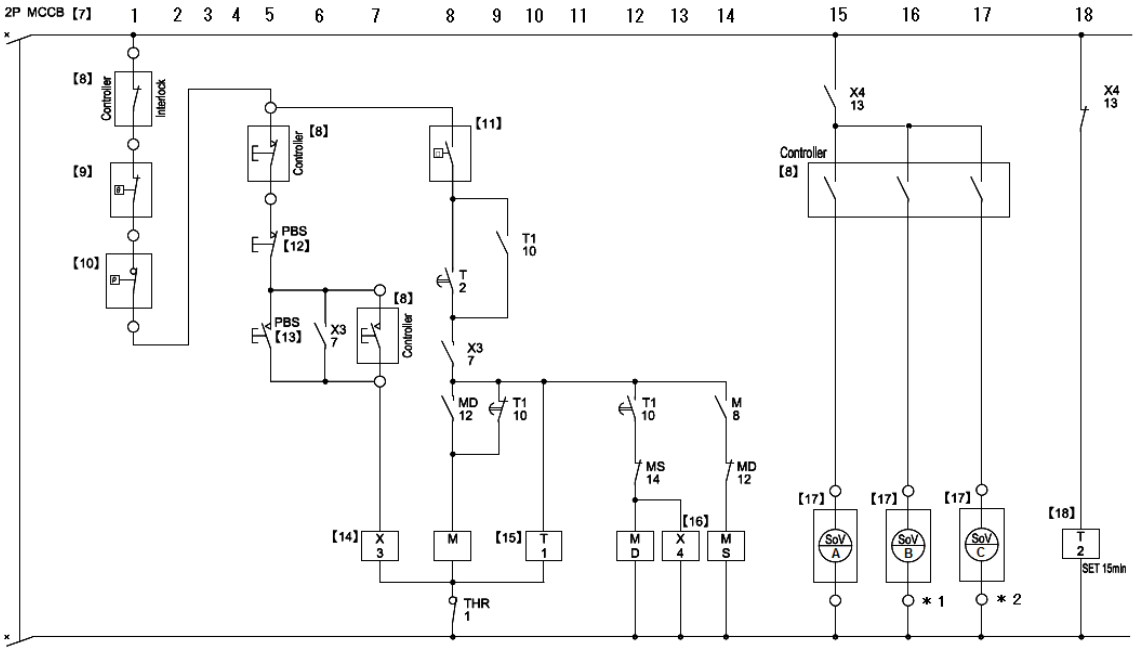

Capacity control **Interval of starting**

	SoV 全てoff	SoV A on	SoV +B on	SoV +C on
4K	50%	100%	–	–
6K	33%	66%	100%	–
8K	25%	50%	75%	100%

＊1 : It is not to 4K.
＊2 : It is not to 4K and 6K.

Figure app-7b

Contact Information

Sales Offices/Service Centers

■ Sales Offices in Japan (as of June 10, 2015)

Description	Location	Phone/Fax
Head Office	3–14–15 BOTAN KOTO-KU, TOKYO 135-8482	TEL: 03-3642-8181 FAX: 03-3643-7094
Hokkaido Branch	2-5-1, 3-JYO NIJYUUYONKEN NISHI-KU, SAPPORO-CITY, HOKKAIDO 063-0803	TEL: 011-631-2052 FAX: 011-631-2053
Tohoku Branch	8-72, ROKUTYONO-MEMINAMI-MACHI, WAKABAYASHI-KU, SENDAI-CITY, MIYAGI 984-0013	TEL: 022-288-5001 FAX: 022-288-5155
Kanto Branch	3–14–15 BOTAN, KOTO-KU, TOKYO 135-8482	TEL: 03-3642-8968 FAX: 03-3641-8468
Chubu Branch	2-9-6, MARUNOUCHI, NAKA-KU, NAGOYA CITY, AICHI 460-0002	TEL: 052-218-3307 FAX: 052-218-3308
Kansai Branch	1-4-27, EBIE, FUKUSHIMA-KU, OSAKA CITY, OSAKA 553-0001	TEL: 06-4795-6000 FAX: 06-4795-6033
Chugoku Branch	2-3-40, TAKAYADAI, HIGASHIHIROSHIMA CITY, HIROSHIMA 739-2117	TEL: 082-491-1830 FAX: 082-491-1838
Shikoku Branch	410-1, OTAKAMI-MACHI, TAKAMATSU-CITY, KAGAWA 761-2117	TEL: 087-868-3400 FAX: 087-868-3399
Kyushu Branch	FUKUOKA-FUJILAND-BUILD. 10F, 2-3, NAKASHIMA-MACHI, NAKASU, HAKATA-KU, FUKUOKA CITY, FUKUOKA 810-0802	TEL: 092-262-0016 FAX: 092-262-0115

■ Manufacturing Bases in Japan (as of June 10, 2015)

Description	Location	Phone/Fax
Moriya Plant	2000, TATSUZAWA MORIYA-CITY, IBARAKI 302-0118	TEL: 0297-48-1361 FAX: 0297-48-5269
Higashi-Hiroshima Plant	2-3-40, TAKAYADAI, HIGASHIHIROSHIMA CITY, HIROSHIMA 739-2117	TEL: 082-491-1828 FAX: 082-491-1838

■ Global Network (as of June 10, 2015)

Description	Location	Telephone and facsimile No.
NORTH AMERICA		
MAYEKAWA CANADA INC. (VANCOUVER OFFICE)	12180 RIVERSIDE WAY, RICHMOND, B.C., V6W 1K5, CANADA	TEL: (1) 604-270-1544 FAX: (1) 604-270-9870
MAYEKAWA CANADA INC. (TORONTO OFFICE)	1745 BONHILL ROAD, UNIT #6&7 MISSISSAUGA, ONTARIO, L5T 1C1, CANADA	TEL: (1) 905-564-0664 FAX: (1) 905-564-7614
MAYEKAWA CANADA INC. (CALGARY OFFICE)	4525 6A STREET N.E., CALGARY, ALBERTA, T2E 4B2, CANADA	TEL: (1) 403-250-1554 FAX: (1) 403-250-1504
MAYEKAWA U.S.A. INC. (CHICAGO OFFICE)	1850 JARVICE AVENUE, ELK GROVE VILLAGE, IL 60007, U.S.A.	TEL: (1) 773-516-5070 FAX: (1) 773-516-5071
MAYEKAWA U.S.A. INC. (NEW YORK OFFICE)	250 WEST NYACK ROAD,SUITE 230,WEST NYACK, NY 10994, U.S.A.	TEL: (1) 914-301-9770 FAX: (1) 914-332-0400
MAYEKAWA U.S.A. INC. (HEAD QUARTERS) (NASHVILLE PLANT)	130 SMART PARK DRIVE, LEBANON, TN 37090, U.S.A.	TEL: (1) 615-773-2859 FAX: (1) 615-444-1995
MAYEKAWA U.S.A. INC. (LA OFFICE)	19475 GRAMERCY PLACE, TORRANCE, CA 90501, U.S.A.	TEL: (1) 310-328-1362 FAX: (1) 310-782-6759
MAYEKAWA U.S.A. INC. (SEATTLE OFFICE)	2615 W CASINO ROAD, UNIT-3D, EVERETT, WA 98204, U.S.A.	TEL: (1) 425-645-9400 FAX: (1) 425-353-3344
MAYEKAWA U.S.A. INC. (COVINA OFFICE)	1272 CENTER COURT DR, SUITE 106, COVINA, CA 91724, U.S.A.	TEL: (1) 626-598-5030 FAX: (1) -
MAYEKAWA U.S.A.INC. (SAN ANTONIO OFFICE)	1219 SAFARI, SAN ANTONIO, TX 78216, U.S.A.	TEL: (1) 210-599-4536 FAX: (1) 210-599-4538
MAYEKAWA U.S.A. INC. (YORK OFFICE)	3395 FARMTRAIL ROAD YORK, PA 17406, U.S.A.	TEL: (1) 717-779-0138 FAX: (1) 717-779-0109
MAYEKAWA U.S.A. INC. CHEMICAL PROCESS DIVISION (LA OFFICE & ANUFACTURING)	19475 GRAMERCY PLACE, TORRANCE, CA 90501, U.S.A.	TEL: (1) 310-328-6279 FAX: (1) 310-328-8487
MAYEKAWA U.S.A. INC. CHEMICAL PROCESS DIVISION (HUSTON SERVICE OFFICE)	3222 PASADENA FREEWAY PASADENA, TX 77503, U.S.A.	TEL: (1) 281-447-2599 FAX: (1) 281-447-6623
MAYEKAWA U.S.A. INC. CHEMICAL PROCESS DIVISION (HUSTON SALES & ENGINEERING OFFICE)	1770 ST. JAMES PLACE, SUITE 408, HOUSTON, TX 77056, U.S.A.	TEL: (1) 832-547-2320
EUROPE and AFRICA		
N.V.MAYEKAWA EUROPE S.A. (HEAD OFFICE, FACTORY)	LEUVENSESTEENWEG 605, 1930 ZAVENTEM, BELGIUM	TEL: (32) 2-757-9075 FAX: (32) 2-757-9023
MAYEKAWA DEUTSCHLAND GMBH	UNTER-BOHNHOF-STRASSE 38A, D-82110 GERMERING, DEUTSCHLAND	TEL:(49) 89-5527-989-0 FAX:(49)89-5527-989-19
MAYEKAWA DEUTSCHLAND GMBH (HUMBURG OFFICE)	WEIDESTRASSE 122A, 22083 HAMBURG, DEUTSCHLAND	TEL:(49)40-2788-9149-0 FAX:(49)40-2788-9149-9
N.V.MAYEKAWA EUROPE S.A.(UK)	16 OAKHURST GARDENS, BEXLEYHEATH, KENT DA7 5JP, UNITED KINGDOM	TEL: (44) 1322-433558 FAX: (44) 1322-433164

Description	Location	Telephone and facsimile No.
MAYEKAWA. S.L.	CALLE MONTEVIDEO 5, NAVE 13 POL. INDUSTRIAL CAMPORROSO 28806 ALCALA DE HENARES, MADRID, SPAIN	TEL: (34) 91-830-0392 FAX: (34) 91-830-0397
MAYEKAWA FRANCAISE SARL	9, RUE MICHAEL FARADAY, 78180 MONTIGNY-LE-BRETONNEUX, FRANCE	TEL: (33) 1-30-58-26-00 FAX: (33) 1-30-58-19-37
N.V. MAYEKAWA EUROPE MOSCOW REPRESENTATIVE OFFICE	KOROVY VAL ST., 7, OFFICE 228, 119049, MOSCOW,RUSSIA	TEL: (7) 499-230-01-76 FAX: (7) 499-230-21-12
MAYEKAWA-SVEDAN SP. Z 0.0. (MPL)	UL. DRUSKIENNICKA 8/10, 60-476 POZNAN, POLAND	TEL: (48) 61-842-0738 FAX: (48) 61-848-5837
MAYEKAWA INTERTEC AG	ROSENBERGSTRASSE 31, CH-6300 ZUG, SWITZERLAND	TEL: (41) 41-726-8626 FAX: (41) 41-726-8620
MAYEKAWA INTERTEC AG - EGYPT	P.O.BOX 341 NEW CAIRO - 5th SETTLEMENT, NORTH 90th St. THE 47th BUILDING - 4th FLOOR, OFFICE 419, EGYPT	TEL: (20) 22-503-2925 FAX: (20) 22-503-2801
MAYEKAWA INTERTECH AG - ABU DHABI	ALI & SONS BUSINESS CENTER OFFICE No.201 ALI KHALFAN RASHED AL MUTAWA AL DHAHIRI BLDG. PLOT No.29, AL AIN ROAD, UMM AL NAR, ABU DHABI U.A.E. P.O. BOX 129865	TEL: (971) 2-5102-451 FAX: (971) 2-5102-571
MAYEKAWA MIDDLE EAST FZCO	P.O.BOX 61349, PBU: RA08-UC05, JEBEL ALI FREE ZONE, DUBAI, U.A.E.	TEL: (971) 4-888-6363 FAX: (971) 4-888-6373
MAYEKAWA TURKEY SOGUTMA SANAYI VE TICARET LIMITED SIRKETI	ISTANBUL DUNYA TICARET MERKEZI A-2 BLOK KAT 10 No:325 YESILKOY 34149, ISTANBUL, TURKEY	TEL: (90) 212-4653631 FAX: (90) 212-4653635
N.V. MAYEKAWA EUROPE S.A. （BULGARIA）	24,KAMEN ANDREEV STR. 1303, SOFIA, BULGARIA	TEL: (359) 2-8910130 FAX: (359) 2-8910131
MAYEKAWA ITALIA S.R.L. （MILANO OFFICE）	VIA RICCARDO LOMBARDI 19/12, 20153 MILANO, ITALY	TEL: (39) 02-4892-9159 FAX: (39) 02-453-1728
MAYEKAWA ITALIA S.R.L. （BOLOGNA OFFICE）	VIA PRADAZZO 7,40012 CALDERARA DI RENO, BOLOGNA, ITALY	TEL: (39) 051-726-364 FAX: (39) 051-726-804
MAYEKAWA SOUTH AFRICA (PTY) LTD. (CAPE TOWN OFFICE)	WEST END, UNIT 3 PRIME PARK, PRINTERS WAY, MONTAGUE GARDENS 7441, REPUBLIC OF SOUTH AFRICA	TEL: (27) 21-551-1434 FAX: (27) 86-546-3618
ASIA PACIFIC		
MAYEKAWA AUSTRALIA PTY.LTD.	UNIT 2, 44 MCCAULEY STREET MATRAVILLE NSW 2036, AUSTRALIA	TEL: (61) 2-9695-7000 FAX: (61) 2-9695-7001
MAYEKAWA AUSTRALIA PTY. LTD.(NEW ZEALAND OFFICE)	UNIT 2, 30 TUI STREET, OTAHUHU, AUCKLAND 2024, NEW ZEALAND	TEL: (64) 9-276-2305 FAX: (64) 9-276-2306
MAYEKAWA INDIA PVT.LTD. (GURGAON OFFICE)	545, 1st FLOOR, SECTOR-20,VILLAGE DUNDAHERA GURAGAON-122016, HARYANA, INDIA	TEL: (91) 12-4651-0181 FAX: (91) 12-4651-0188

Description	Location	Telephone and facsimile No.
P.T.MAYEKAWA INDONESIA	GRAHA PRATAMA BUILDING, 9TH FLOOR JL. M.T. HARYONO KAV.15 JAKARTA 12810, INDONESIA	TEL: (62) 21-8370-9484 FAX: (62) 21-8370-9483
P.T.MAYEKAWA INDONESIA (MEDAN OFFICE)	JL. SUTRISNO No.274 MEDAN-20215, INDONESIA	TEL: (62) 61-7323627 FAX: (62) 61-7358848
P.T.MAYEKAWA INDONESIA (SURABAYA OFFICE)	BUMI MANDIARI BUILDING, 7TH FLOOR SUITE 702B, JL. JEND. BASUKI RACHMAT No. 129-137, SURABAYA-INDONESIA	TEL: (62) 31-531-6613 FAX: (62) 31-532-4341
MAYEKAWA (M) SDN. BHD.	No.3, JALAN PJU 3/50, SUNWAY DAMANSARA TECHNOLOGY PARK, 47810 PETALING JAYA, SELANGOR, MALAYSIA	TEL: (60) 3-78051406 FAX: (60) 3-78051409
MAYEKAWA PHILIPPINES CORP.	4/F UNIT A AND B SUNTREE TOWER, 13 MERALCO AVENUE, SAN ANTONIO, ORTIGAS CENTER, PASIG CITY 1605, PHILIPPINES	TEL: (63) 2-706-0473 FAX: (63) 2-706-0475
MAYEKAWA PHILIPPINES CORP. (GENARAL SANTOS OFFICE)	ROOM 4, LEAH DAPROZA BUILDING FISCAL DAPROZA AVENUE GENERAL SANTOS CITY 9500, PHILIPPINES	TEL: (63) 83-552-3282 FAX: (63) 83-301-2698
MAYEKAWA SINGAPORE PTE.LTD.	6 TAGORE LANE SINGAPORE 787470	TEL: (65) 6451-1565 FAX: (65) 6451-4932
MAYEKAWA (TAIWAN) CO., LTD. (KAOHSIUNG OFFICE)	No.2-1,XINZHAN RD.,QIANZHEN DIST., KAOHSIUNG CITY,80672 TAIWAN , ROC	TEL: (886) 7-821-0886 FAX: (886) 7-821-4688
MAYEKAWA (TAIWAN) CO., LTD. (CHEMICAL DEPARTMENT)	1F., NO.2, SHIN JANN ROAD, CHIEN CHEN DIST., KAOHSIUNG, TAIWAN 80672, ROC	TEL: (886) 7-812-7709 FAX: (886) 7-812-9019
MAYEKAWA (TAIWAN) CO., LTD. (TAIPEI HEAD OFFICE)	8F, NO, 421, SUNG-SHAN ROAD, TAIPEI, TAIWAN 11083, REP. OF CHINA	TEL: (886) 2-2727-9711 FAX: (886) 2-2759-8484
MAYEKAWA (TAIWAN) CO., LTD. (TAICHUNG BRANCH)	NO. 80-2, SEC.3, HUANJUNG RD., TAICHUNG, TAIWAN, 40755, REP. OF CHINA	TEL: (886) 4-2251-4128 FAX: (886) 4-2251-4129
MAYEKAWA CHINA INDUSTRIES CO., LTD. (SHANGHAI BRANCH)	ROOM 3001, NANZHENG BUILDING, NO.580 WEST NANJING RD., 200041 SHANGHAI, P.R. CHINA	TEL: (86) 21-5234-1988 FAX: (86) 21-5234-1788
MAYEKAWA CHINA MFG.CO., LTD.	201700 PLANT 1, NO.39, WEST XIQING ROAD, QINGPU, SHANHAI, P.R. CHINA	TEL: (86) 21-6920-7718 FAX: (86) 21-6920-7719
MAYEKAWA CHINA MFG.CO., LTD. (GUANGZHOU BRANCH)	RM.1205, TIANLHEFULI BUSINESS MANSION, No.4, HUA TING RD, GUANGZHOU, 510610, CHINA	TEL: (86) 20-8527-6161 FAX: (86) 20-8527-6165
MAYEKAWA CHINA MFG. CO., LTD. (QINGDAO BRANCH)	ROOM 601, FULIN BUILDING NO.87 SOUTH FUZHOU ROAD, SOUTH DISTRICT, QINGDAO CITY, 266071, CHINA	TEL: (86) 532-8602-6169 FAX: (86) 532-8602-6269

Description	Location	Telephone and facsimile No.
MAYEKAWA CHINA MFG. CO., LTD. (DALIAN BRANCH)	RM.A13-5, No.1 BUILDING, AREA A , WUCAI CITY, DALIAN ECO-TECH DEVELOPMENT ZONE, 116100, DALIAN, P. R. CHINA	TEL: (86) 411-8753-9620 FAX: (86)411-8757-9620
MAYEKAWA (THAILAND) CO., LTD. MAYEKAWA HOLDING (THAILAND)CO., LTD.	2/3 MOO 14, 3RD FLOOR BANGNA TOWER BLDG., TOWER A, BANGNA-TRAD RD, K.M.6.5, BANGKAEW BANGPLEE, SAMUTPRAKARN 10540, THAILAND	TEL: (66) 2-751-9610 FAX: (66) 2-751-9565
MAYEKAWA (THAILAND) CO., LTD. (TRANG BRANCH)	1/7 TRANG-PALIAN RD., MUANG, TRANG 92000, THALAND	TEL: (66) 75-224-784 FAX: (66) 75-224-351
MAYEKAWA VIETNAM ONE MEMBER CO., LTD.	ROOM 305, 3FL, TUOI TRE TOWER, 60A HOANG VAN THU, WARD 9, PHU NHUAN DIST., HO CHI MINH CITY, VIETNAM	TEL: (84) 8-3997-5284 FAX: (84) 8-3997-5287
MYCOM KOREA CO., LTD. (HEAD OFFICE)	2F, 345, CHEONGRA-RO , YONGSAN-KU, SEOUL, 140-710, REP.OF KOREA	TEL: (82) 2-796-1766 FAX: (82) 2-798-7715
MYCOM KOREA CO., LTD. CHANGWON FACTORY	19, BANGYE-RO, UICHANG-KU, CHANGWON-SI, GYEONGSANGNAM-DO 641-847, REP.OF KOREA	TEL: (82) 55-294-8678 FAX: (82) 55-299-7678
MYCOM KOREA CO., LTD. (BUSAN BRANCH)	5F, 26, JUNGANG-DAERO, JUNG-GU, BUSAN 600-714, REP.OF KOREA	TEL: (82) 51-242-3737 FAX: (82) 51-243-8542
LATIN AMERICA		
MAYEKAWA ARGENTINA S.A. (BUENOS AIRES OFFICE)	DR. JOSE VALENTIN GOMEZ 151, LOT42, HAEDO-PARTIDO DE MORON, BUENOS AIRES, CP B1706FMA, ARGENTINA	TEL: (54) 11-4627-6660 FAX: (54) 11-4628-1511
MAYEKAWA ARGENTINA S.A. (PUERTO MADRYN OFFICE)	OFICINA PTO. MADRYN LEOPOLDO LUGONES 45 (U9129KDA)-PUERTO MADRYN PCIA DE CHUBUT REPUBLICA ARGENTINA	TEL: (54) 2965-475414 FAX: (54) 2965-475414
MYCOM PERU S.A.C.	CALLE LUIS PASTEUR 1490, LINCE, LIMA, PERU	TEL: (51) 1-205-5400 FAX: (51) 1-222-1543
MAYEKAWA CHILE S.A.C.el. (SANTIAGO OFFICE)	CORDILLERA No.331, MODULO D14, FLEX CENTER, PUERTO VESPUCIO, QUILICURA, SANTIAGO, CHILE	TEL: (56) 2-739-0202 FAX: (56) 2-739-2700
MAYEKAWA CHILE S.A.C.el. (CONCEPCION OFFICE)	ANIBAL PINTO No.215, OFICINA 403, CONCEPCION, CHILE	TEL: (56) 41-223547 FAX: (56) 41-212443
MAYEKAWA CHILE S.A.C.el. (PUERTO MONTT OFFICE)	BERNARDINO 1057 MODULO 6, PARQUE INDUSTRIAL SAN ANDRES PUERTO MONTT, CHILE	TEL: (56) 65-257570 FAX: (56) 65-288073
MAYEKAWA ECUADOR S.A.	CALLE 15B Y AV. GUILLERMO PAREJA C.C.STEFANY LOCAL #4, CALLA.LA GARZOTA 1 MZ.28 SOLOR 13, GUAYAQUIL, ECUADOR	TEL: (593)4-262-9108 TEL: (593)4-262-6407 FAX: -
MAYEKAWA COLOMBIA S.A.S	TRANSVERSAL 93 NO.53-48 INTERIOR 37, PAQUE INDUSTRIAL EL DORADO, BOGOTA, COLOMBIA	TEL: (57) 1-430-9980 TEL: (57) 1-224-3028 FAX: (57) 1-437-0988

Description	Location	Telephone and facsimile No.
MAYEKAWA COLOMBIA S.A.S. (MEDELLIN OFFICE)	DIRECCION CR 43B No. 8 SUR 10 OFICINA 404 EDF. OVIEDO MEDELLIN, COLOMBIA	TEL: (57) 4-313-4343 FAX: (57) 4-313-4343
MAYEKAWA DO BRASIL EQIPAMENTOS INDUSTRIAIS LTDA.	RUA LICATEM 250, BLOCO B/C, JARDIM PEROVA-ARUJA-SP CEP:07428-280, BRASIL	TEL: (55) 11-4654-8000 FAX: (55) 11-4654-8002
MAYEKAWA DO BRASIL LTDA. (BAHIA BRANCH)	RUA DR. JOSE PEROBA, 275 - SALA 902 EDIFICIO METROPOLIS - BAIRRO STIEPE, SALVADOR – BA,CEP:41770-235, BRASIL	TEL: (55) 71-3341-0737 FAX: —
MAYEKAWA DO BRASIL EQIPAMENTOS INDUSTRIAIS LTDA. (CHAPECO BRANCH)	AV. NEREU RAMOS, 75D, SALA 503A, EDIFICIO CENTRO PROFISSIONAL CEP:89801-023 C.P.:177 CHAPECO-SC, BRASIL	TEL: (55) 49-3324-0681 FAX: (55) 49-3322-4241
MAYEKAWA DO BRASIL EQIPAMENTOS INDUSTRIAIS LTDA. (CUIABA BRANCH)	AVENIDA ISSAC POVOAS, 586 – SALA 405 EDIFICIO WALL STREET - CENTRO CUIABA-MT, CEP 78055-560, BRASIL	TEL: (55) 65-3023-7559 FAX: —
MAYEKAWA DO BRASIL EQIPAMENTOS INDUSTRIAIS LTDA. (CURITIBA BRANCH)	RUA XV DE NOVEMBRO, 2175 6 ANDAR SALA 30 SHOPPING CELLI CEP:83005-000 SAO JOSE DOS PINHAIS-PR, BRASIL	TEL: (55) 41-3383-1518 FAX: (55) 41-3383-1987
MAYEKAWA DO BRASIL EQIPAMENTOS INDUSTRIAIS LTDA. (GOIANIA BRANCH)	RUA C, 255 – QUADRA 588 – LOTE 4/8 SALA 104 – CENTRO EMPRESARIAL SEBBA GOIANIA-GO, CEP 74280-010, BRASIL	TEL: (55) 62-3093-5062 FAX: —
MAYEKAWA DO BRASIL EQIPAMENTOS INDUSTRIAIS LTDA. (OESTE PAULISTA BRANCH)	AV. FRANCISCO DE CHAGAS OLIVEIRA, 344 JARDIM PINHEIRO SAO JOSE DO RIO PRETO-SP, CEP 15091-330, BRASIL	TEL: (55) 17-3227-0235 FAX: (55) 17-3227-3120
MAYEKAWA DO BRASIL EQIPAMENTOS INDUSTRIAIS LTDA. (RECIFE BRANCH)	RUA AGENOR LOPES, 292 SALA 305 CEP:51021-110 BOA VIAGEM RECIFE-PE, BRASIL	TEL: (55) 81-3342-7670 FAX: —
MAYEKAWA DO BRASIL EQIPAMENTOS INDUSTRIAIS LTDA. (RIO GRANDE DO SUL BRANCH)	RUA MUCK, 298 – SALA 601 EDIFICIO SANTA HELENA CEP:92010-250 CANOAS-RS, BRASIL	TEL: (55) 51-3429-1860 FAX: (55) 51-3477-5212
MAYEKAWA DO BRASIL EQIPAMENTOS INDUSTRIAIS LTDA. (LINHARES BRANCH)	AV. GOVERNADOR CARLOS LINDENBERG, 873/107 CENTRO CEP:29900-020 LINHARES-ES, BRASIL	TEL: — FAX: —
MAYEKAWA DO BRASIL EQIPAMENTOS INDUSTRIAIS LTDA. (MACAE)	RUA PROFESSOR MARIETA PEIXOTO, 62 CENTRO - MACAE – RJ, CEP 27910-250, BRASIL	TEL: (55) 22-2772-6069 FAX: (55) 22-2759-3112
MAYEKAWA DO BRASIL EQIPAMENTOS INDUSTRIAIS LTDA. (RIO DE JANEIRO BRANCH)	AV.LUIZ CARLOS PRESTES, 350-SALA 313-EDIFICIO BARRA TRADE II, BARRA DA TIJUCA, RIO DE JANEIRO-RJ CEP:22775-055, BRASIL	TEL: (55) 21-2431-3600 FAX: (55) 21-2430-8882
MYCOM CENTROAMERICA S.A	BODEGA #63, CONDOMINIO COMERCIAL TIERRA DOS, EL CACIQUE DE RIO SEGUNDO, ALAJUELA, COSTA RICA	TEL: (506) 2441-4464 FAX: (506) 2441-4465

Description	Location	Telephone and facsimile No.
MYCOM VENEZUELA SALES & SERVICES,C.A. (CARACAS OFFICE)	CALLE LOS MANGOS, EDIFICIO SELEMAR, PISO 8, SABANA GRANDE, CARACAS, VENEZUELA	TEL: (58) 212-216-6026 FAX: (58) 212-216-0608
MYCOM VENEZUELA SALES & SERVICE, C.A. (MARACAY OFFICE)	AV.INTERCOMUNAL TURMERO, EDF.TECHOMAT METROPOLITANO, PISO 1, OFICINA 3, MARACAY, EDO.ARAGUA, VENEZUELA	TEL: (58) 243-269-4913 FAX: (58) 243-269-3952
MYCOM VENEZUELA SALES & SERVICE, C.A. (MARACAIBO OFFICE)	CALLE 148,CENTRO EMPRESARIAL SAN FRANCISCO NIVEL 1 LOCAL 5 Y 6, ZONA INDUSTRIAL IIETAPA,SAN FRANCISCO EDO.ZUILIA, VENEZUELA	TEL: (58) 261-418-1760 FAX: -
MYCOM VENEZUELA SALES & SERVICE, C.A. (BARCELONA OFFICE)	AV. MUNICIPAL DE PTO. LA CRUZ, EDIF. LOCAL NRO.57, PLANTA ALTA, MUNICIPIO SOTILLO, PUERTO LA CRUZ, VENEZUELA	TEL: (58) 261-765-1059
MYCOM CHEMICAL PROCESS CORP. DE VENEZUELA S.A.	CALLE 148,CENTRO EMPRESARIAL SAN FRANCISCO NIVEL 1 LOCAL 5 Y 6, ZONA INDUSTRIAL IIETAPA,SAN FRANCISCO EDO.ZUILIA, VENEZUELA	TEL: (58) 261-418-1760 FAX: -
MAYEKAWA DE MEXICO, S.A. DE C.V. (CUERNAVACA OFFICE)	AV.DE LOS 50MTS.NO.381, CIVAC. JIUTEPEC MORELOS, C.P.62578, MEXICO	TEL: (52) 77-73-19-0925 FAX: (52) 77-73-20-5762
MAYEKAWA DE MEXICO, S.A. DE C.V. (MEXICO CITY OFFICE)	AV.COYOACAN #945 COL .DEL VALLE DEL. BENITO JUAREZ C.P.03100, MEXICO, D.F. MEXICO	TEL: (52) 55-5062-0870 FAX: (52) 55-5062-0898
MAYEKAWA DE MEXICO, S.A. DE C.V. (GUADALAJARA OFFICE)	SANTA MARIA No.3086, COL. VALLARTA SAN LUCAS GUADALAJARA, JALISCO, C.P.44690, MEXICO	TEL: (52) 3336-15-5765 FAX: (52) 3336-15-1307
MAYEKAWA DE MEXICO, S.A. DE C.V. (MONTERREY OFFICE)	AV.CHAPULTEPEC NO.2233 OTE. FRACC, BUENOS AIRES MONTERREY N.L. C.P.64800, MEXICO	TEL: (52) 81-8347-3085 FAX: (52) 81-8347-5830
MAYEKAWA DE MEXICO, S.A. DE C.V. (HERMOSILLO OFFICE)	CALLE FRAY TORIBIO DE BENAVENTE #38 COL. LOS ARCOS CD. HERMOSILLO, SONORA, C.P.83250, MEXICO	TEL: (52) 662-216-2047 FAX: (52) 662-216-2047
MAYEKAWA DE MEXICO, S.A. DE C.V. (IRAPUATO OFFICE)	CALLE AGUSTIN ZARAGOZA NO.219 LOCAL-2 COL.DEPORTIVA, C.P.36612, IRAPUATO, GTO. MEXICO	TEL: (52) 462-624-9353 FAX: (52) 462-624-9264
MAYEKAWA DE MEXICO, S.A. DE C.V. (CULIACAN OFFICE)	AV. NICOLAS BRAVO 1572, LOCAL 1 COL.MORELOS CULIACAN, SINALOA, C.P.80170, MEXICO	TEL: (52) 66-7715-4199 FAX: (52) 66-7715-4150
MAYEKAWA DE MEXICO, S.A. DE C.V. (VILLAHERMOSA OFFICE)	CERRADA DE RIO AMATAN 106-A COL. CASA BLANCA PRIMERA SECCION, VILLAHERMOSA, TABASCO, C.P.86060, MEXICO	TEL: (52) 993-315-4025

MAYEKAWA MFG. CO., LTD.

3-14-15 Botan Koto-ku, Tokyo 135-8482, JAPAN
Phone : +81 (0)3-3642-8181
URL : http://www.mayekawa.com/