2200M4JE-HO-W-N_2014.04.

MYCOM

Instruction Manual for W-Series Reciprocating Compressors

2WA/4WA/6WA/8WA/42WA/62WA
4WB/6WB/8WB/12WB/42WB/62WB/12·4WB

ATTENTION

Please carefully and thoroughly read and understand all aspects described in this instruction manual before operating, inspecting, or performing any maintenance work on the compressor. Be sure to keep this instruction manual carefully at a predetermined place, such that the manual is readily accessible whenever it is needed.
Specifications of this product are subject to change without prior notice.

MYCOM MAYEKAWA MFG. CO., LTD.
3–14–15 Botan Koto-ku, Tokyo 135-8482, Japan

Preface

Thank you for purchasing the MYCOM W-series reciprocating compressor (hereafter referred to as “this product”) of MAYEKAWA Mfg. Co., Ltd. (hereafter referred to as “MAYEKAWA”)

Since the initial production and sales launch in 1955 of the first multi-cylinder high speed compressor, MAYEKAWA has subsequently produced a number of series reciprocating compressor products including the Type A, B, J, C, SF, and K products.

The W-series compressors have been in production and on sale since 1988, being improved from the Type A, B and J products.

This instruction manual (hereafter referred to as “this manual”) provides safety information, operating procedures, and maintenance procedures for the WA and WB type products (both included in the W-series) for the user to be able to sufficiently understand the correct methods of handling the product, in order to safely and effectively use the product. This manual is applicable to the following type products:

2WA, 4WA, 6WA, 8WA, 42WA, 62WA,
4WB, 6WB, 8WB, 12WB, 42WB, 62WB, 12-4WB

Notes

- Type WB products are currently not in production as they have been replaced by the successor Type WBH in January 2006 and then by Type WBHE since September 2008.
- If instruction manuals for Type WBH and WBHE products are required, please contact MAYEKAWA as manuals for these products are separately available.

Please be sure to read this manual carefully before installing or using this product.

Also, please keep this manual at a convenient place near the product installation to ensure that it can be quickly referred to should any unclear issues arise.

Revision History

Title of Instruction Manual			Document No.	Date of Initial Issue
Instruction Manual for W-Series Reciprocating Compressors			**2200M4JE-HO-W-N_2014.04.**	**April 21, 2014**
Rev. No.	**Issue Date**	**Revision Details**		**Prepared by / Approved by**
—	March 1, 1996	Issued to meet the requirements set forth in the Product Liability Law established in July, 1994.		
00	**April 21, 2014**	**Complete revision and reissue as an electronic manual.**		**Ikehara / Hirao**

Warranty and Disclaimer

Warranty Clauses

MAYEKAWA shall repair or replace parts of this product for no charge if any failure resulting from defects in design or manufacture occurs, under normal use with the purpose and method that are in accordance with the specifications of this product and this manual, within the warranty period.
The warranty period is "12 months from factory shipment of this product". If there is a separate agreement, that agreement shall prevail in principle.

Disclaimer Clauses (Exclusion of Warranty Clauses)

Please note that we disclaim any responsibility for damage or malfunction to this product, as described in the following items.

- Any failure or damage caused by an act of God including, but not limited to, windstorm, heavy rain, flood, high tide, earthquake, subsidence of ground, lightning strike, fire, etc.
- Malfunctions, damage, or degradation due to misuse or unacceptable use of the product (including improperly storing the product outdoors or under too hot/humid conditions, excessively frequent liquid flow-back operation, extremely frequent start-stop cycles, etc.).
- Any failure or damage caused by other systems or devices not supplied by MAYEKAWA including operation control methods of them.
- Any failure or damage caused by the use of any refrigerant (or gas) or lubricant not applicable to this product.
- Any failure or damage caused by the performance of maintenance or inspection procedures not recommended by MAYEKAWA.
- Any failure or damage caused by the use of any other than the genuine parts of MAYEKAWA.
- Any failure or damage caused by any conversion or modification of the product other than as instructed by MAYEKAWA.
- Direct or indirect production warranty or all other related warranties that arose due to a failure or damage of this product.

Important Information

Intended Use of this Product

This product is a general purpose reciprocating compressor to be used for refrigeration, cold storage, or air conditioning. Do not use this product for any purposes other than the intended use or outside the scope of the specifications. Refer to Chapter 2, Section 2.2 “Compressor Specifications” of this manual for specifications of this product.

In addition, it is requested that the maintenance actions described in this manual be taken using safe and secure procedures.

Precautions for the Safe Use of this Product

Although MAYEKAWA is taking all possible and reasonable measures to ensure the safety of the product, it is impossible for MAYEKAWA to foresee every possible risk that remains in the product, risk due to human errors, or risk due to the operation environment.

In using this product, there are many things that are to be strictly followed or prohibited. However, it is impractical to communicate all of such matters in this manual or using warning labels. As such, in addition to the precautions provided in this manual, the user is required to consider other safety measures that are generally required.

The following points are important work safety suggestions for everyone including the manager, supervisor, and other personnel who may work on this product.

Before using this product, please read this manual carefully to sufficiently understand the details and securely implement the safety procedures described in this manual.

- Operation, maintenance, and inspection of this product should be performed by qualified personnel educated about the fundamentals of the product and trained about hazards involved and measures to avoid danger.
- Anyone other than the ones who have been provided with the basic technical knowledge on this product and trained on the potential risks and how to avoid the risks is not allowed to approach the area where this product is installed.
- Observe all related federal/national and local codes and regulations.
- To prevent accidents, do not carry out any operation or maintenance other than those described in this manual, or use the product for any unapproved purpose.
- Be sure to use only MYCOM genuine parts for replacement.
- Not only workers but also managers should actively participate safety and health activities in the workplace to prevent accidents.
- When closing or opening valves during work, apply lockout/tagout without failure, to prevent the valves from closing or opening accidentally during the work.

“Lock-out” To lock with a key in order to keep people, except the workers involved, from operating the product.

“Lockout” means disconnecting or keeping disconnected machines and devices by locking their energy (power) sources. Lockout is not just simply turning off the power switches to stop the supply of power, but includes immobilizing them with a key or similar device to keep any blocked switches from being operated.

Lockout devices are devices such as keys, covers, and latches, to immobilize switches, valves, opening and closing levers, etc., with a state of being locked.

"Tag-out" To prevent any inappropriate work by hanging tag plates indicating "work in progress".

"Tagout" means to clearly indicate, by hanging tag plates, that a device is in lockout and that operation of the device is prohibited. Tag plates forbidding operation, starting, opening, etc. are warnings clearly stating to not operate energy (power) sources, and are not for stopping blocking devices.

Observe the following precautions when performing maintenance work on electrical control.

- The work must be performed by a qualified person who has been trained on the electric control of the particular target system as well as on the potential risks inherent to electric control and how to avoid the said risks, on top of the generally required knowledge on electrical work.
- Whenever servicing or inspecting electric machinery, be sure to cut off the motor main power and control power, implement lock-out and tag-out procedures, and prevent any accidental application of power during the work.

However, it should be noted that the system may be energized from other sources even if the motor main power and control power are cut off, if power is supplied externally, i.e., not from the refrigeration/cold storage unit that uses this product. In such a case, be sure to cut off the power supply source, implement lock-out and tag-out procedures, and prevent any accidental application of power during the work.

About this Manual

- This product is subject to continuous development and improvement without prior notice. Accordingly, the details provided in this manual may partly differ from the actual condition. If any problem is found during work, please contact one of our sales or service establishments.
- This manual is in English. If any other language is required, it is the customers' responsibility to prepare a manual for safety education and operation instructions.
- MAYEKAWA owns the copyright of this manual. Any part of relevant drawings and technical documents, including this manual, may not be copied in any possible way, including the use of electronic media, without prior permission from MAYEKAWA.
- The pictures and illustrations in this manual may not accurately represent the actual condition of the product.
- In case this manual is lost or damaged, please promptly place an order for the copy to one of our sales or service offices. The use of this product without this manual can be a cause of possible accidents.
- When you sell this product, be sure to transfer this manual to the next owner.

Structure of this Manual

Chapter/Section Title	Description
Preface	Describes the outline and usage of this manual.
Warranty and Disclaimer	Describes what MAYEKAWA warrants and what are covered by the warranties. Warranty exemption is stated as disclaimer.
Important Information	Describes important information related to this product and this manual.
1. Safety	Describes safety information for the worker, safety rules for this product, and management details regarding the work safety that is required for handling this product.
2. Compressor Mechanism and Specifications	Describes the main components of this product, functional information, specification, and operating limits.
3. Installation	Describes the installation procedure of this product.
4. Operation of Compressor and System	Describes the precautions for operating this product.
5. Maintenance and Inspection	Describes sections and period for inspecting, and assembly and disassembly of this product.
6. Troubleshooting	Describes troubleshooting methods for this product in case problems occur during operation of this product.
7. Related Documents	Describes documents such as development views and parts list.
Contact Information	Describes contact information for our local sales offices or service centers, which are for ordering MYCOM genuine parts.

Table of Contents

Chapter 2 Compressor Mechanism and Specifications

Chapter 3 Installation

Chapter 4 Operation of Compressor and System

Chapter 5 Maintenance and Inspection

Chapter 6 Troubleshooting

Chapter 1 Safety

1.1 Observation/Prevention (DOs and DON'Ts)

1.1.1 DOs

1.1.1.1 DOs on Operation

- Make sure to attach safety and protective devices to the package unit.
- The safety devices and protection systems must be regularly checked for their normal operation.
- If any safety device or protection system does not function normally or this product operates in an abnormal manner, immediately stop the work and contact your supervisor. When the system is to be restarted, you must observe the decision and instruction of the supervisor.
- If this product has stopped operation due to an unknown cause, immediately contact your supervisor. Before restarting the system, you must seek the decision and instruction of the supervisor.
- Depending on the type of refrigerant used, its leakage may generate a bad smell or poisonous gas. Be sure to sufficiently ventilate the room while the machine is operated.
- Regarding the characteristics of the refrigerant and lubricant, e.g., corrosiveness, degradability, and toxicity, be sure to obtain the Safety Data Sheet (SDS) of them and follow the instructions given.
- When this product is not to be used for some period of time, close the suction (side) and discharge (side) stop valves and shut off the motor power source, heater power, and control power.

1.1.1.2 DOs on Maintenance

- Prepare work procedures based on a work plan. Be sure to perform danger forecasting before starting the work.
- If two or more people are to work together, be sure to mutually check the work details and procedures before the work. During the work, always keep track of the other workers' actions.
- Before working on any troubleshooting during operation, before setting up this product, before cleaning work, and before conducting maintenance or inspection work, be sure to shut off the motor power source, control power, and power to other equipment, perform lock-out and tag-out procedures, and take effective measures to prevent any accidental power-on during the work.
- Before working on any troubleshooting during operation, before setting up this product, before cleaning work, and before conducting maintenance or inspection work, be sure to check that the internal pressure of this product and the refrigeration/cold storage unit is at the atmospheric pressure.
- Depending on the type of refrigerant used, it may generate a bad smell or poisonous gas or could cause an oxygen deficient atmosphere. Before starting the work, measure the oxygen content in the work area, as appropriate, and provide sufficient ventilation. The ventilation must be continued steadily until the work is completed.
- Regarding the characteristics of the refrigerant and lubricant, e.g., corrosiveness, degradability, and toxicity, be sure to obtain the Safety Data Sheet (SDS) of them and follow the instructions given.
- After work, the tools used must be returned to the predefined location. Be sure not to leave them inside the package unit.

1.1.1.3 DOs on Lockout/Tagout after Shutting Off the Power

- A lock-out/tag-out mechanism must be installed for the main circuit breakers that supply power to the motor and power to the control system. The lock-out/tag-out after power down is a very effective means to ensure the safety when two or more workers are working on the system at the same time, as it can prevent possible injury of workers that may be caused by accidental power-on of the driving source by one of the workers.
- If there is a risk of danger, especially during cleaning, maintenance/inspection, or troubleshooting work, be sure to let the workers perform the lock-out/tag-out procedures after the motor main power and control power has been shut off.
- Because the workers may neglect to perform the lock-out/tag-out procedures or cut-off the power in the following situations, be sure to instruct them to strictly follow the correct procedure by clearly identifying the work that require lock-out/tag-out and the reasons why it is needed.
  - As it is a cumbersome task for the workers to cut off the motor main power and control power and use lock-out/tag-out devices before starting the work, they might neglect to do it.
  - The workers might determine by themselves that it should be OK just to cut off the motor main power and control power, and not use any lock-out/tag-out devices.

1.1.1.4 DOs about Personal Protective Gear

- The work must be performed by preparing or using the personal protective gear that conforms to the applicable legal requirements and safety standards.
- Before use, each personal protective gear must be checked for proper functioning.
- Wear designated regular working wear or uniform and securely fasten the cuff buttons.
- Do not wear a tie or other accessories that may get caught by a moving or rotating part.
  Wear a helmet as your hair may also get caught.
- Do not have anything in your pocket to prevent objects from falling into the machine.

1.1.1.5 DOs about Handling of Hazardous and Toxic Substances

- For each of the dangerous goods and hazardous materials, obtain the safety data sheet (SDS) from the manufacturer.
  Carefully check the details of the safety data sheet (SDS), handle the material according to the recommended handling procedures provided by the manufacturer, and keep the SDS in storage.

1.1.1.6 DOs about Handling Emergency Situations

- Develop an emergency action plan according to the applicable legal requirements and post it at a safe place.

1.1.1.7 DOs about Waste Oil, Fluid, and Materials

- Disposal of the refrigerant, oil, and other materials used in this product is restricted in various ways in terms of environmental protection. Be sure to dispose them at the designated site using specified procedures by observing the rules set forth by the applicable laws, regulations, and any voluntary regulations of the customer.

1.1.1.8 Other DOs

- The entire floor around the refrigeration/cold storage unit must always be kept clean, and safety passages must be provided.
- During work, walk only on the above mentioned safety passages. Note that the safety passages must always be kept free from hindrances such as tools, cleaning liquid, etc.
- When water or oil is spilled onto this product or on the floor, immediately wipe it off for not to cause someone to slip and be injured.

1.1.2 DON'Ts

- Never remove or reposition any safety device based on your own judgment, including any modification of electrical interfaces.
- Never disable the function of safety devices by short-circuit connections or bypassing the circuits without prior permission.
- Never leave this product in an unsafe condition by removing a safety cover, etc.
- Do not to touch, clean, or lubricate any moving part of this product.
- While power is turned on, never touch any energized part such as a relay terminal or terminal block by bare hand.

1.2 Warning Notices in this Manual

The warning notices given in this manual inform the user of any dangerous situation that may be expected during the work using the four categories as listed in the following table.

Ignorance of these warnings can lead to a significant personal injury, and in some extreme cases, it could lead to loss of life.

In addition, the main unit or any accessory equipment may be severely damaged. Be sure to observe the instructions in the warning notice.

Table 1-1 Types and Meanings of Warnings

Type	Meaning
DANGER	Indicates that there is a high risk of death or severe injury if it is not avoided.
WARNING	Indicates that there is a potential risk of death or severe injury if it is not avoided.
CAUTION	Indicates that there is a risk of light or medium injury if it is not avoided.
CAUTION	Indicates that there is a potential risk of property damage if it is not avoided.

1.3 Residual Risks

The following information is provided assuming that this product will be operated, inspected, and maintained while it is used in a general refrigeration, cold storage, or air conditioning system. However, it is impossible for us to foresee all the sources of risk in the particular refrigeration, cold storage, or air conditioning system that the customer will actually use.

As such, the customer is requested to take proper measures regarding the possible sources of risk.

Table 1-2 Hazardous Sources

	Risk Area	Predicted hazard	Measures to be taken in operation	Measures to be taken when cleaning, inspection, and/or parts replacement
A	Drive system	• Contact with or getting caught in a rotating part • Falling off of moving part • Recovery after interruption of energy supply	• Installation of a guard, cover, or other protection device • Keep away	• Lock-out/tag-out for the motor main power and control power
B	Head cover	• Getting a burn by touching it when it is hot	• Installation of a guard or other protection • Wearing a personal protection device • Keep away	• Wearing a personal protection device • Perform the work only when the temperature is 40°C or less
C	Discharge pipe	• Getting a burn by touching it when it is hot	• Installation of a guard or other protection • Wearing a personal protection device • Keep away	• Wearing a personal protection device • Perform the work only when the temperature is 40°C or less
D	Unloader solenoid valve	• Electric shock	• Installation of a guard or other protection • Wearing a personal protection device • Keep away	• Lock-out/tag-out for the control power
E	Heater	• Electric shock • Burn	• Installation of a guard, cover, or other protection device • Wearing a personal protection device • Keep away	• Lock-out/tag-out for the power to the heater • Wearing a personal protection device • Perform the work only when the temperature is 40°C or less
F	Suction (side) stop valve	• Contact with or inhalation of hazardous material • Low temperature burn	• Wearing a personal protection device • Sufficient ventilation • Installation of a guard or other protection	• Wearing a personal protection device • Sufficient ventilation
G	Discharge (side) stop valve	• Contact with or inhalation of hazardous material • Burn	• Wearing a personal protection device • Sufficient ventilation • Installation of a guard or other protection	• Wearing a personal protection device • Sufficient ventilation • Perform the work only when the temperature is 40°C or less
H	Gas purge valve	• Contact with or inhalation of hazardous material	• Wearing a personal protection device • Sufficient ventilation	• Wearing a personal protection device • Sufficient ventilation
I	Oil drain	• Burn • Contact with hazardous material	• Do not touch while in operation	• Wearing a personal protection device • Perform the work only when the temperature is 40°C or less
J	Noise	• Hearing impairment due to loud noise	• Wearing a personal protection device	—
K	Motor	• Getting a burn by touching it when it is hot • Electric shock	• Wearing a personal protection device	• Lock-out/tag-out for the motor main power and control power • Wearing a personal protection device • Perform the work only when the temperature is 40°C or less

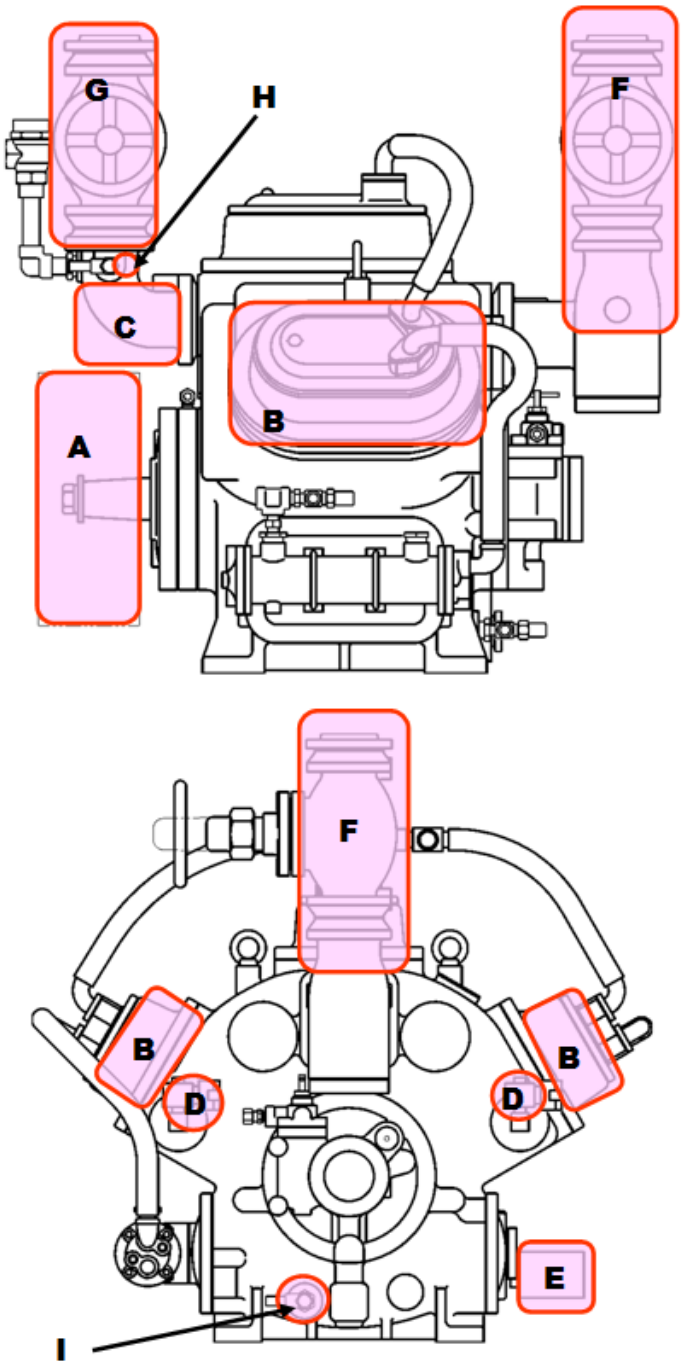

Symbol	Risk Area	Symbol	Risk Area
A	Drive system	F	Suction stop valve
B	Head cover	G	Discharge stop valve
C	Discharge pipe	H	Gas purge valve
D	Unloader solenoid valve	I	Oil drain
E	Heater	-	-

Figure 1-1 Risk Areas (example: 6WA)

1.4 Safety Devices

For the safe use and protection of this product, necessary safety devices must be equipped as required by the applicable laws and regulations and according to the following descriptions.

To keep the safety devices in a normal condition at all times, proper and regular maintenance and inspection are essential. Accordingly, it must be treated as one of the essential tasks in the maintenance and inspection activities for the equipment. Be sure to provide the user of this product with sufficient information regarding the type of safety devices used, their locations, functions, and how to inspect such safety-related devices.

WARNING

- **Check the safety devices after turning on the power and before operation of this product. If they do not operate normally, immediately take countermeasures.**

1.4.1 Emergency Stop Button

■ Overview, functions, and objectives

The emergency stop buttons are used for emergency shutdown of this product when an emergency situation arises.

■ Installation location

At the local control panel and in the operation control room

■ Stopping and recovery methods

The operating procedures for the emergency stop button, i.e., how to stop the operation and restore the normal operating condition, must be clearly defined and the information provided to the user of this product.

■ Inspection method and inspection interval

The emergency stop button must be tested for normal operation before each commission and at regular interval. The inspection procedures and the inspection interval for the emergency stop button must be clearly defined and the information provided to the user of this product.

1.4.2 Circuit Breakers for the Motor Main Power and Control Power (with lock-out/tag-out mechanism)

■ Overview, functions, and objectives

If there is a risk of danger due to accidental power-on of the drive system during the work being conducted after the motor main power and control power have been shut off, e.g., during cleaning, maintenance/inspection, or troubleshooting work, it is necessary to install a lock-out/tag-out mechanism to the circuit breakers of the motor main power and control power in order to prevent possible injury of the workers.

■ How to implement and restore the lock-out/tag-out function

The methods of implementing and restoring the lock-out/tag-out function must be sufficiently communicated to the user of this product by clearly describing the said methods by referring to the relevant specifications provided by OSHA (Occupational Safety & Health Administration) or others.

■ Inspection method and inspection interval

Refer to the instruction manual of the unit for the inspection method and inspection interval for the lock-out/tag-out mechanism.

1.4.3 Safety Cover (drive system)

■ Overview, functions, and objectives

The safety cover is used to prevent the workers from contacting with or getting caught in the drive system of this product.

■ Installation location

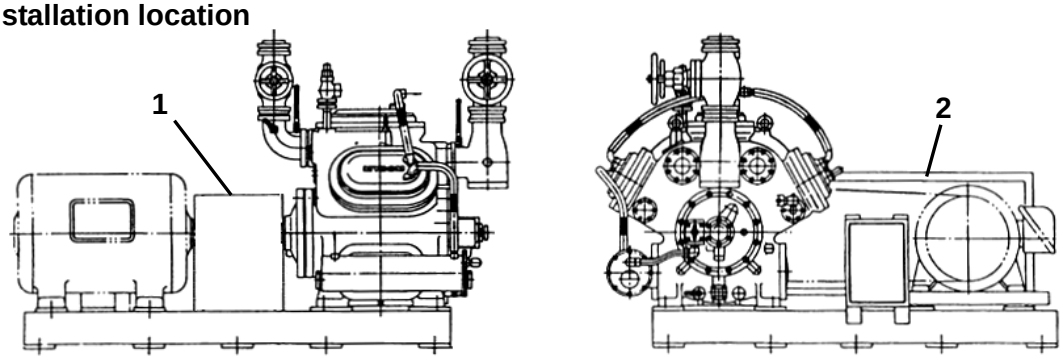

No.	Name
1	Safety cover, drive system (for direct drive)

No.	Name
2	Safety cover, drive system (for belt drive)

Figure 1-2 Example installation of the safety cover for the drive system (6WA)

■ Inspection method and inspection interval

The inspection procedures and the inspection interval for the safety cover must be clearly defined and the information provided to the user of this product.

1.4.4 Safety Valve

■ Overview, functions, and objectives

The safety valves are used to prevent rupture of the compressor when the internal pressure of the compressor becomes excessively high.

■ Installation location

The safety valve on the discharge side must be installed between the compressor and the stop (service) valve. It must be functional even when the service valve is fully closed while the compressor is operated.

WARNING

- **The discharge side of the safety valve must be properly processed according to the applicable laws and regulations for the refrigerant type.**
  If ammonia gas is released in the air, it is likely to cause health damage such as intoxication or bad smell. If the gas is discharged into a closed space such as a machine room, it can cause a significant accident such as oxygen deficit.

■ Setting

The set pressure of the safety valve must be at or below the design pressure of the compressor. The set pressure of the safety valve must be clearly specified and the information provided to the user of this product.

■ Inspection method and inspection interval

The safety valve must be tested for normal operation before each commission and at regular interval. The inspection procedures and the inspection interval for the safety valve must be clearly specified and the information provided to the user of this product.

1.4.5 Automatic Control and Protection Devices for the Compressor

■ Overview, functions, and objectives

- Reduced oil pressure protection device (OP)

  When the oil pressure of the compressor (i.e., the oil pressure gauge reading minus the suction pressure) is reduced due to insufficient amount of the refrigerant oil, clogging of the filter, and/or mixing of refrigerant into the refrigerant oil, this device will automatically shut down the motor drive circuit to stop the operation of the compressor.
  This function prevents the possibility of abnormal friction or seizure of the sliding surface as well as the inoperability of the unloader.

- High pressure protection device (HP)

  When the discharge pressure of the compressor becomes extremely high due to misoperation of the compressor, no water in the condenser, etc., this device will automatically cut off the motor circuit to stop the operation of the compressor.
  In this way, possible explosion or other harmful effect to the system is prevented.

- Compressor capacity control: Low pressure control device (LP)

  For a compressor, the number of cylinders determines the number of capacity control stages.
  In principle, the capacity is controlled for each bank consisting of two cylinders. Thus, if the compressor has 8 cylinders, the capacity control can be made at 4 stages. Similarly, 6 (4) cylinder compressors can have 3 (2) stages for capacity control.
  There are two methods of capacity control, i.e., one is to automatically control the capacity by detecting the suction pressure and the other is to manually control the capacity.
  The automatic capacity control uses the signal detected by the low pressure control switch to open or close the solenoid valve in the hydraulic path. This will operate the unloader piston, which is the mechanism to control the capacity of the compressor. For the operation sequence, refer to Chapter 4, Section 4.2 " Operation Sequence of the Unloader" of this manual.

■ Connecting point

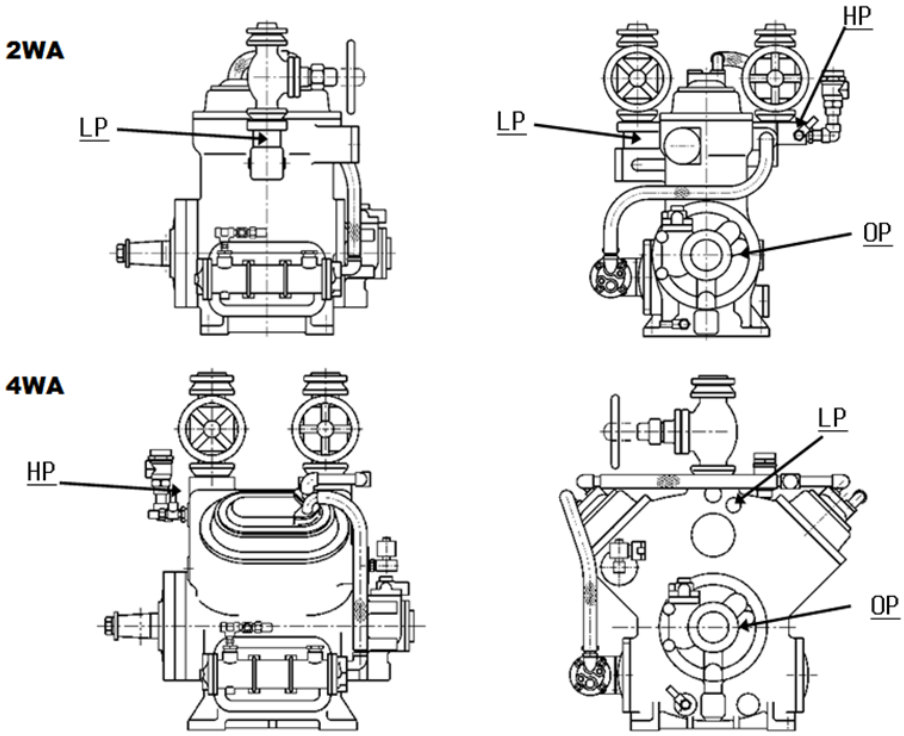

Figure 1-3 Pressure Detection Points (2WA, 4WA)

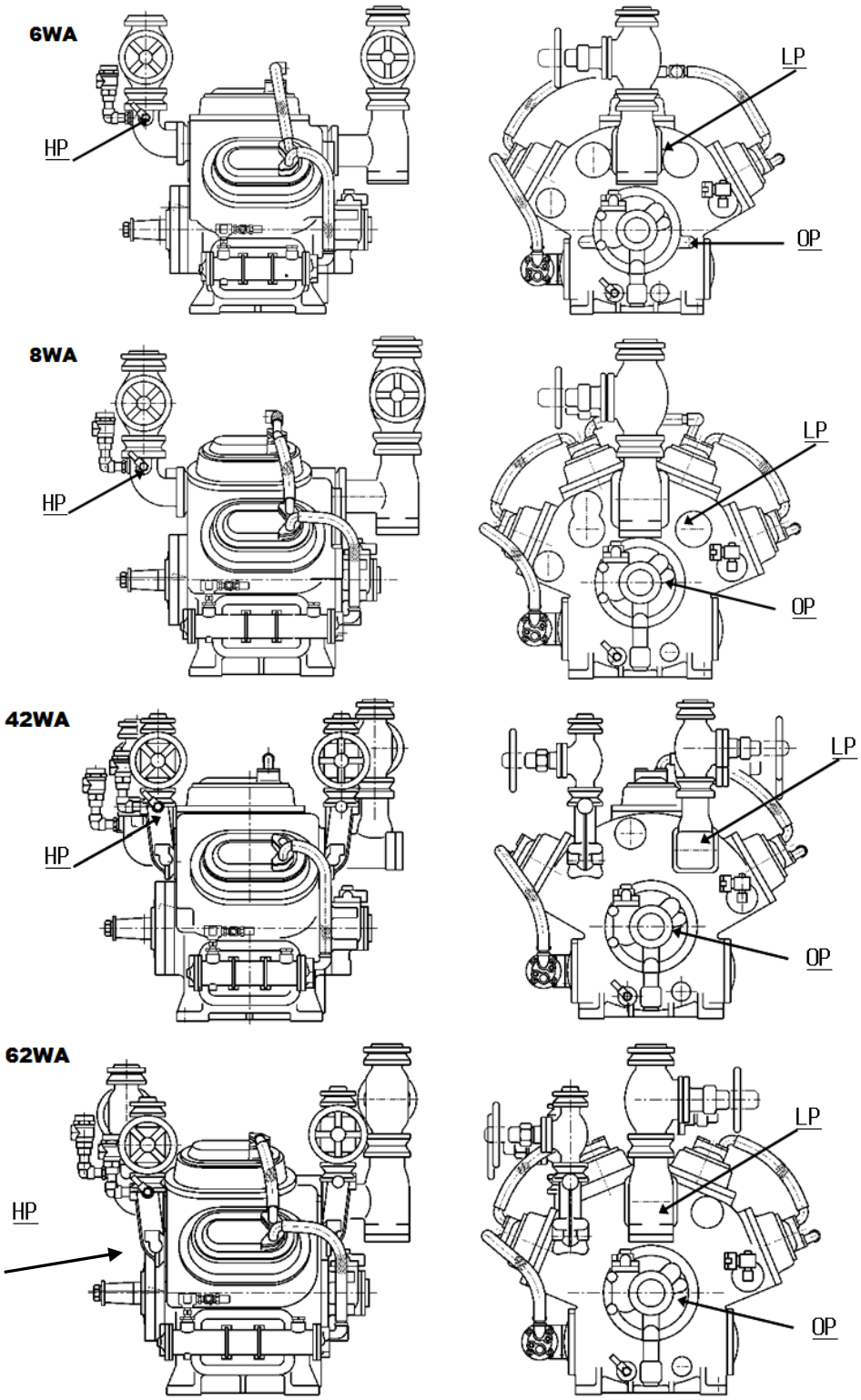

Figure 1-4 Pressure Detection Points (6WA, 8WA, 42WA, 62WA)

■ Setting

The setting of reduced oil pressure protection (OP), high oil pressure protection (HP) and low pressure control (LP) must be clearly specified by referring to the following table and the information provided to the user of this product.

Table 1-3 Example Setting

	Operate (ON)	Release (OFF)	Timer	Recovery
Reduced oil pressure protection device (OP)	Low pressure + 0.15 MPa	Low pressure + 0.17 MPa	30 sec.	Manual recovery
High pressure protection device (HP)	2.0 MPa or less*	—	None	Manual recovery
Low pressure control device (LP)	Depends on the refrigerant used and the system.			Automatic recovery

[POINT]

- Set the operating point for the high pressure protection device (HP) at a pressure lower than the safety valve starting pressure. It is recommended that it is set to a value any abnormality can be quickly detected, considering the refrigerant used and the system characteristics. In addition, if the pressure is electrically measured and a control circuit (e.g., sequencer) is used to generate the alarm, it is recommended to generate a pre-alarm when the pressure gets near the abnormal level.

■ Inspection method and inspection interval

Each compressor protection device must be checked for the settings and tested for normal operation before each commissioning and at regular interval. The inspection procedures and the inspection interval for each compressor protection device must be clearly specified and the information provided to the user of this product.

CAUTION

- **For the operational test, use a pressurization tester or other device to confirm that the alarm and/or switch are normally operated. Never operate the compressor in a dangerous condition, such as when the valves are fully closed.**

CAUTION

- **If the reduced oil pressure protection device (OP) or high pressure protection device (HP) is operated, the cause of the operation must be removed before recovery to the normal operation.**

1.4.6 No Water Alarm

■ **Overview, functions, and objectives**

This alarm is used to prevent possible overheating of the head cover and/or refrigerant oil due to the inoperability of the water-cooling head cover and/or water-cooling oil cooler.

■ **Installation location**

Cooling water system

■ **Setting**

The no water alarm setting must be clearly specified and the information provided to the user of this product.

■ **Inspection method and inspection interval**

The no water alarm must be tested for normal operation before each commissioning and at regular interval. The inspection procedures and the inspection interval for the no water alarm must be clearly specified and the information provided to the user of this product.

1.4.7 Oil Heater and Thermal Switch

CAUTION
● **If the heater and the thermal switch is not dipped in oil when it is powered, the heater can be easily overheated and broken (heating with no oil). Always carefully check the oil level before applying power to the heater.**

■ **Overview, functions, and objectives**

The oil heater is a cartridge-type sheath heater. It is a pressure-resistant sealed type heater, with the heating wire covered by insulators and the outside of the unit is sealed by a stainless tube, and is designed to maximize the heat dissipation area.

The oil heater is used to prevent excessive mixing of the refrigerant into the oil as well as to prevent possible condensation of the refrigerant in the crank case while the compressor is not operated. As such, it is used only while the system is not operated (not used during operation).

■ **Installation location**

The thermal switch used to control the temperature of the heater is mounted inside the heater. The temperature setting dial can be checked by opening the heater cover.

■ **Setting**

The thermal switch setting must be clearly specified and the information provided to the user of this product.

■ **Inspection method and inspection interval**

The thermal switch must be tested for normal operation before each commissioning and at regular interval.

The inspection procedures and the inspection interval for the thermal switch must be clearly specified and the information provided to the user of this product.

Chapter 2 Compressor Mechanisms and Specifications

2.1 Compressor Mechanisms

2.1.1 Overview of W-series Compressors

The MYCOM W-series reciprocating compressors are piston compressors designed to be used with various types of refrigerant. While the W-series includes type WA, WB, and WJ compressors, this manual is intended only for the type WA and WB compressors.

The main difference between the WA and WB-types is in the bore/stroke ratio, where the WA-type has the bore/stroke of 95/76 mm and the WB-type has 130/100 mm.

The WA-type includes 5 different models, i.e., 4WA, 6WA, 8WA, 42WA, and 62WA, and it boasts a long production run since September 1988.

While the production of the WB-type compressors have been already terminated being succeeded by the type WBH compressors from January 2006 and further succeeded by the WBHE type compressors from September 2008, the seven standard models, i.e., 4WB, 6WB, 8WB,12WB, 42WB, 62WB, 12-4WB, in the WB series are mostly still in operation worldwide.

These models have different number of cylinders to meet the needs of the customers for various capacity ranges. Also, for intermediate capacity range requirements, the rotation speed is changed. In this way, it is designed to meet a variety of customer needs.

2.1.2 Sectional View of the Compressor

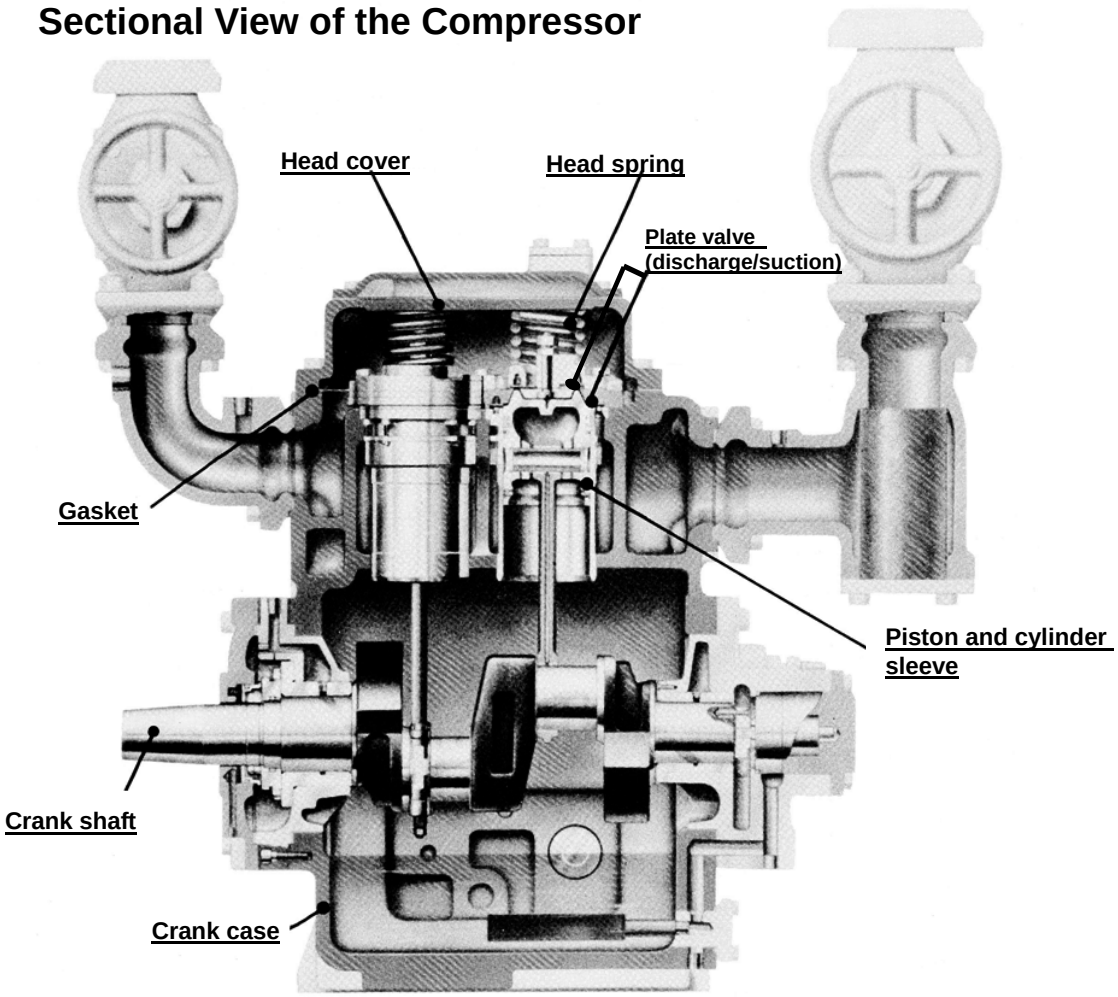

Figure 2-1 Sectional View of the Compressor

2.1.3 Gas Compression Mechanism

The inside structure of the compressor is such that the gas discharge compartment is separated from the gas suction compartment in an integrated construction casted crank case.
The crank shaft, i.e., the drive shaft, which is supported by bearings at both ends, forms a crank to convert the rotating motion to the reciprocating motion. By linking the connecting rod to the crank (crank-pin), the piston is moved up and down to suck and compress the refrigerant gas. The crank has oppositely placed two crank pins (separated by 180 degrees in phase), and each pin is assembled with the connecting rods, the number of which is half the number of cylinders.
One rotation of the crank shaft makes one up/down cycle of the piston to complete the suction and discharge strokes.

Top dead center Suction stroke Bottom dead center Discharge stroke

Figure 2-2 Movement of the Crank Shaft and Piston

The W-series has five types of cylinder layout, i.e., 2 cylinders × 2 lines (2 × 2) V-shape layout of 4 cylinders (crank angle interval of 90 degrees), 3 × 2 layout of 6 cylinders (crank angle interval of 60 degrees), 4 × 2 layout of 8 cylinders (crank angle interval of 22.5 degrees), 3 × 4 layout of 12 cylinders (crank angle interval of 60 degrees), and 4 × 4 layout of 12-4 cylinders (crank angle interval of 45 degrees).
Mechanical seals are used for sealing the crank shaft.

2.1.3.1 Suction Stroke

a) When the piston goes down, the discharge plate valve is pressed onto the seat surface of the cylinder lip by the gas pressure after the discharge and the discharge spring force.
b) While the piston continues to go down, a pressure difference is generated between the suction gas chamber and the cylinder, of which gas pressure pushes up the suction plate valve from the path through the cylinder lip. As a result, the refrigerant gas vaporized in the evaporator is introduced into the cylinder.
c) When the piston reaches the bottom dead center, the gas chamber pressure becomes approximately equal to the cylinder internal pressure, and the suction plate valve is pushed onto the seat surface by the suction spring force. This completes the suction stroke and it move to the compression stroke.

2.1.3.2 Compression Stroke

a) As the crank shaft rotation continues, the piston starts to go up. When the gas pressure inside the cylinder starts to increase, the cylinder internal pressure is applied to the back of the suction plate valve and the valve is further pressed closely onto the seat surface.
b) As the piston further goes up, the pressure inside the cylinder is further increased. When the pressure exceeds the pressure of the condenser, it pushes up the discharge plate valve to discharge the gas from the cylinder to compete the compression stroke at the top dead center. By repeating the above cycle, continuous compression will be made.

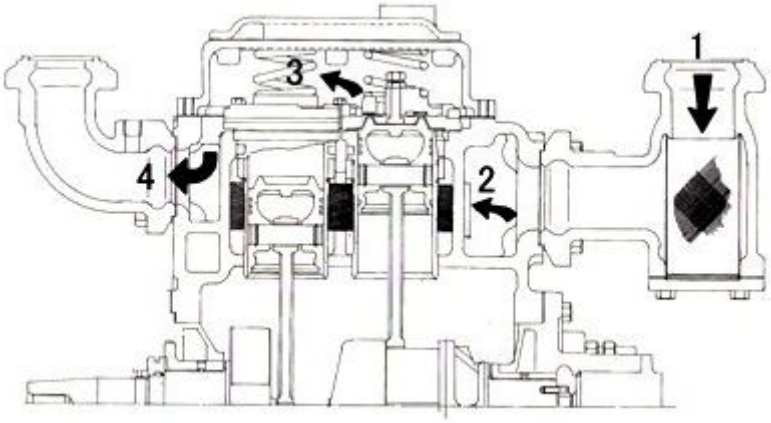

Figure 2-3 Flow of Refrigerant Gas in the Compressor

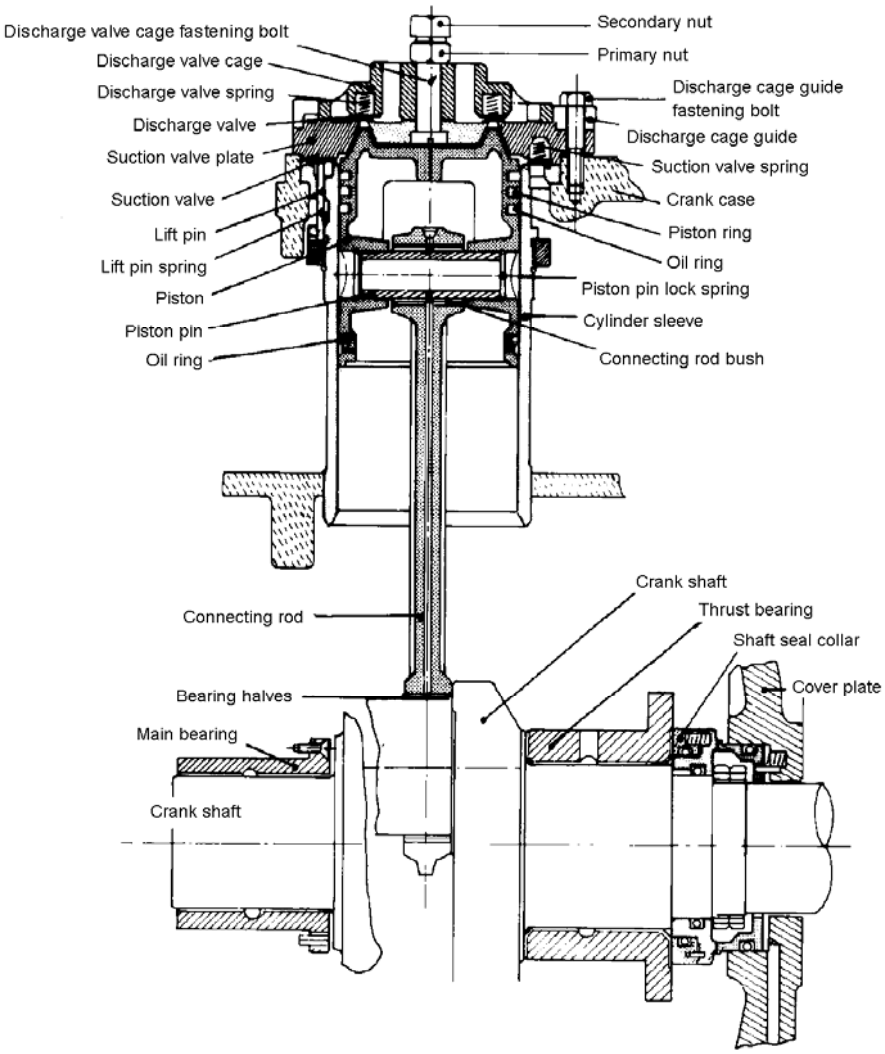

Figure 2-4 Sectional View of the Cylinder

■ Suction and discharge valves and head spring

The W-series compressors have a valve plate for each cylinder. Each valve plate is fastened to the crank case together with the discharge valve cage guide.

Although the discharge valve assembly can move in the up/down direction being guided by the discharge valve cage guide, it will be fixed in position during regular operation because it is pushed down by the head spring.

However, when the pressure is suddenly increased due to liquid compression for example, the discharge valve assembly will push up the head spring to avoid over compression, thereby protecting the compressor components such as the piston.

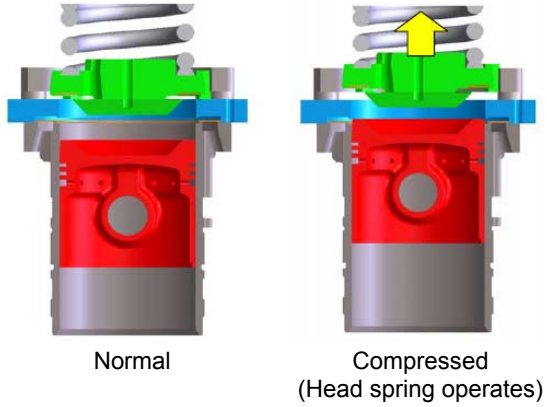

Figure 2-5 Head Spring Function

2.1.4 Unloader Mechanism

The unloader (capacity control) mechanism is implemented in order to reduce the start-up load of the compressor and to deal with the variation in the refrigeration load during operation. The unloader mechanism is operated by hydraulic pressure. By keeping some suction valves open at all times, it disables the compression process of the selected cylinders. As such, by changing the number of disabled cylinders, it can change the capacity of the entire compressor.

Figure 2-6 illustrates the mechanism of operation. While the inlet gas is sucked into the cylinder through a path provided in the flange of the sleeve, this path is opened or closed by the suction plate valve (orange ring in the figure). The loaded state is shown to the left side of the figure. When the unloader piston (shown as a green cylinder) is pushed by the oil pressure, the spring (coil-shaped blue part) is pushed and compressed to move the unloader push rod (rod in light blue) to the right. The unloader push rod has two square bosses (to work on two cylinders), and they push the respective cam rings (dark blue rings) to move them for approximately 15 degrees.

Each cam ring has a slope cut. When one end of the lift pin (red pin) is in this slope cut, the other end of the lift pin will not make contact with the suction plate valve, making the plate valve freely movable in the up/down direction. This is the state when the cylinder is loaded for operation.

The unloaded state is shown to the right side of the figure. When the back of the unloader piston is no more pressed by the oil pressure, the piston moves to the left. As a result, the lift pin will be placed on the flat part of the cam ring, out of the cut in the cam ring. This positions the lift pin higher than when it is in the loaded state, and the plate valve is constantly pushed up (to keep the valve open).

As the plate valve is always open, the gas introduced into the cylinder chamber will not be compressed when the piston goes up and will escape into the suction chamber without changing the gas pressure.

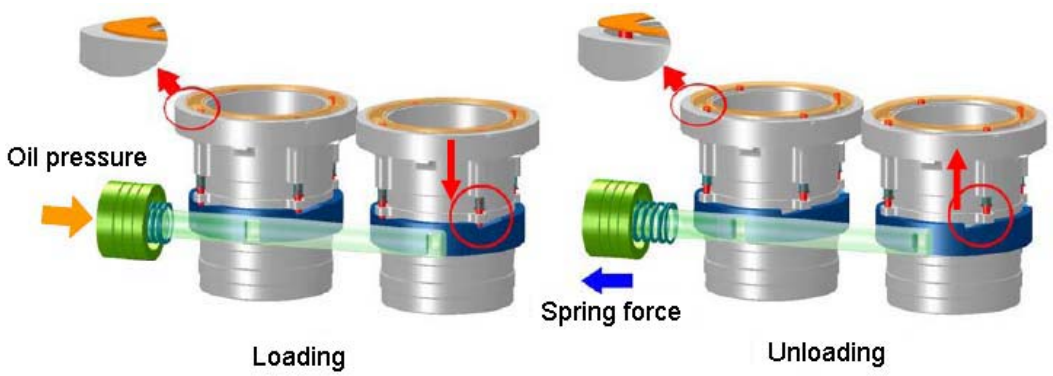

Figure 2-6 Unloader Mechanism

The internal oil pump will start operation only after the compressor has been started up. Because of this, the cylinders with an unloader mechanism will not compress the gas until the oil pressure becomes high enough, even if the hydraulic system has been enabled.

This effect reduces the initial start up torque to some extent. If it is strongly desired to further reduce the load at the startup, it is recommended to start from the minimum load and to gradually increase the number of loaded cylinders.

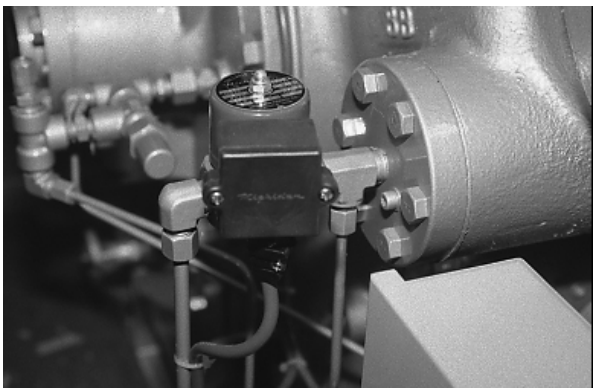

Unloader solenoid valve

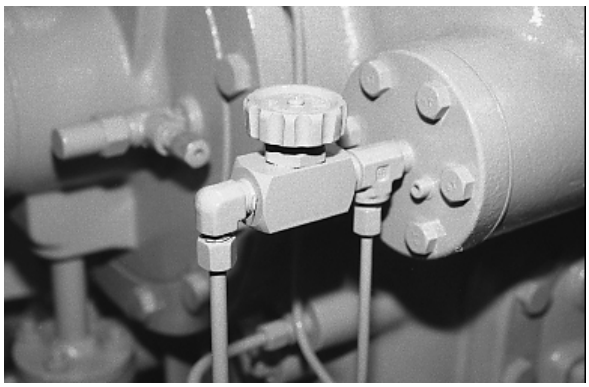

Manual unloader valve

When it is desired to unload the cylinder, open the unloader solenoid valve (or manual unloader valve) to release the oil pressure by discharging the oil from the unloader, as the oil from the oil pump is designed to always flow into (i.e., push) the unloader piston. Close the solenoid valve (or manual unloader valve) when it is desired to load the cylinder.

By using solenoid valves and low pressure switch or sensor (LP) signals, you can set up the system to automatically control the capacity.

For the smooth operation of the unloader mechanism, a small item in the oil supply piping is implemented with a diaphragm of 1 mm diameter, considering the balance between supply and discharge of the oil.

On the oil discharge side, the W-series compressors are implemented with solenoid (manual) valves with a 3 mm diameter orifice.

When R404A is to be used as the refrigerant, valves with a 5 mm diameter orifice will be used to avoid possible slow operation.

When the solenoid valve is closed, the oil out of the oil pump passes through a 1 mm diameter diaphragm and pushes the unloader piston in the unloader cylinder.

When the solenoid valve is opened, the oil in the unloader is discharged to the crank case through a 5 mm diameter orifice and 6 mm (inside diameter) pipe. Although the oil through the 1 mm diameter orifice is still supplied, less flow resistance in the discharge side and the force of the unloader push rod and device spring prevent the unloader piston from moving. As such, the unloader piston will not move and the system will become unloaded.

Either a manual valve or solenoid valve may be used for the unloader by changing the bonnet.

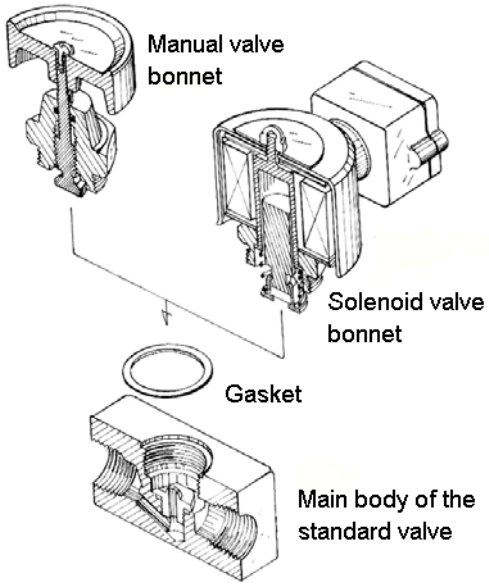

Figure 2-7 Manual Valve and Solenoid Valve

2.1.5 Oil Supply Mechanism

2.1.5.1 Oil Supply Path

A sufficient amount of lubricant will be retained in the oil receiver in the bottom of the crank case, and the oil will pass through the strainer at the bottom to be sucked by the oil pump attached to the end of the crank shaft. The resulting pressurized oil will be supplied to the various parts.

The oil pressurized by the oil pump is first fed to the outside from the main bearing head through a pipe, cooled by the oil cooler, and then returned to the crank case again from the oil cooler outlet. In this, the flow is slightly different between the WA and WB-types.

In the case of WA-type, the oil coming out of the oil cooler is supplied to the bearing head and then internally branched to the shaft seal and the thrust bearing.

The oil to the shaft seal is supplied through a small hole and returns to the crank case from the top of the bearing head.

The oil to the thrust bearing enters the crank shaft through a lubrication groove in the thrust bearing and supplied to the crank pin and connecting rod, while the remaining oil is supplied through an oil hole to the main bearing and main bearing head and supplied to the unloader.

The remaining oil returns to the crank case through the pressure control valve.

In the case of WB-type, as the amount of oil supply from the oil hole in the crank shaft to the main bearing is insufficient, the oil out of the oil cooler is also supplied in parallel using a pipe in the crank case.

Among the WB-type models, as the models 12WB and 12-4WB are with a longer crank shaft, the oil is supplied from three locations, i.e., from the intermediate crank shaft bearing, thrust bearing, and main bearing, to make it safer.

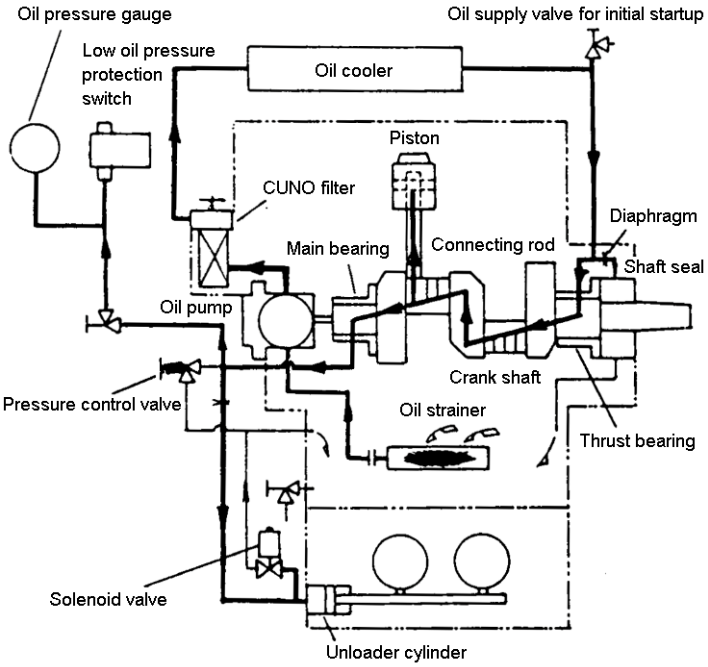

Figure 2-8 Oil flow of WA-type compressors

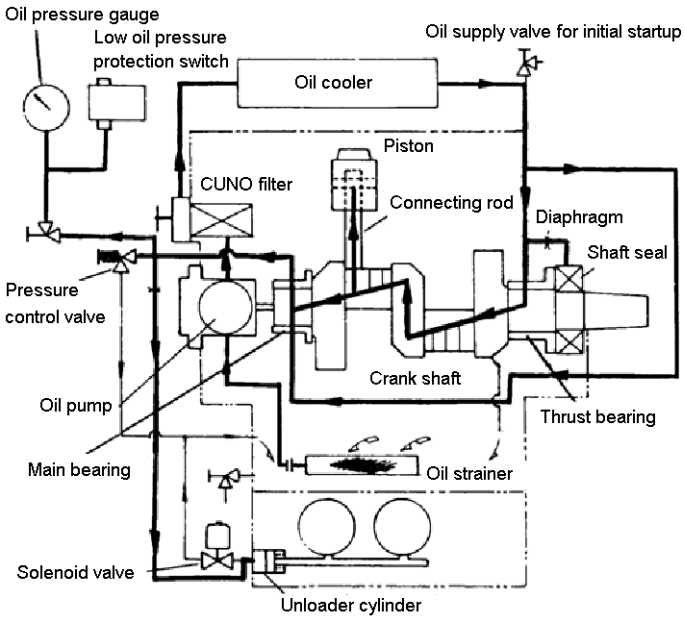

Figure 2-9 Oil Flow of WB-type Compressors

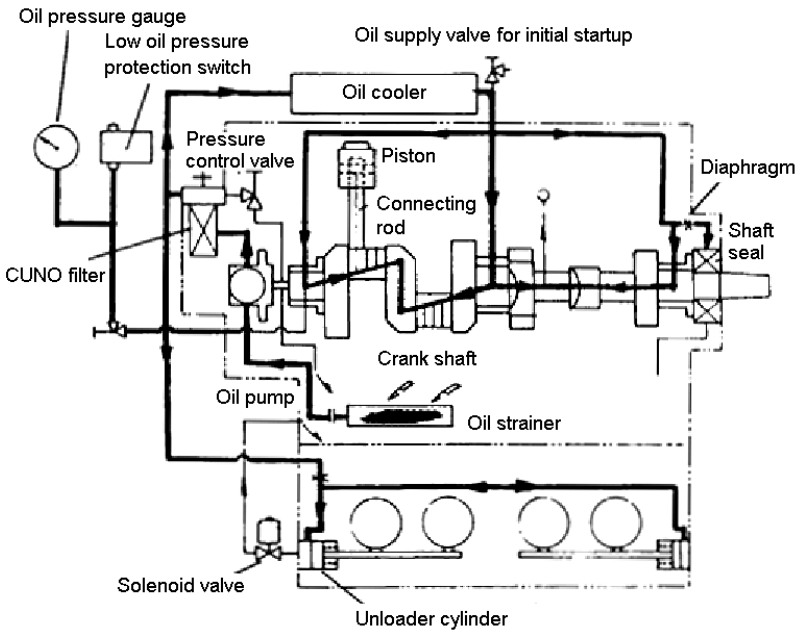

Figure 2-10 Oil Flow of Model 12-4WB Compressors

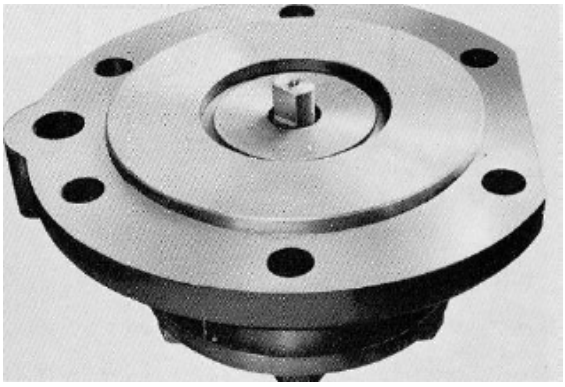

Oil pump for models 12WB and 12-4WB

2.1.5.2 Oil Pump Types and Design Changes

Different types of oil pumps are used in the W-series compressors, including the ones for WA-type, for WA-type low speed version (650 min^{-1} or less), for WA-type to use HFC23 refrigerant, for single stage WB-type, for two-stage WB-type, and for single stage WB-type to use HFC23 refrigerant. These pumps have different types of name plates. The following table summarizes the types of oil pumps including the associated design changes:

Table 2-1 Oil Pump Types and Design Changes for W-series Compressors

Comp. Type Pump designation	Name plate type	Design changes		
		Issue date of design changes notification	Change details	Remarks
WA-type Type A standard (excluding R23)	MA	Feb. 26, 2007	Flange thickness: 19 mm → 20 mm Bolts of main unit: M8 × 4 → M6 × 6 Fastening bolts: M10 × 30 → M10 × 35	Old and new pump assemblies are compatible with each other. Production was discontinued for old units.
	MAS	Apr. 25, 2012	Added a through hole on the shaft, changed the model name.	Fastening bolts: M10 × 35
WB-type single stage Type B-2 (excluding R23)	MB	Feb. 26, 2007	Flange thickness: 19 mm → 20 mm Bolts of main unit: M8 × 4 → M6 × 6 Fastening bolts: M12 × 35 → M12 × 40	Old and new pump assemblies are compatible with each other. Production was discontinued for old units.
	MBS	Apr. 25, 2012	Added a through hole on the shaft, changed the model name.	Fastening bolts: M12 × 40
WB-type two-stage unit Type B 2.5	MB2	Feb. 26, 2007	Flange thickness: 19 mm → 20 mm Bolts of main unit: M8 × 4 → M6 × 6 Fastening bolts: M12 × 35 → M12 × 40	Old and new pump assemblies are compatible with each other. Production was discontinued for old units.
	MB2S	Apr. 25, 2012	Added a through hole on the shaft, changed the model name.	Fastening bolts: M12 × 40

- According to the design change in February 2007, the flange surface is flat (see the pictures below).

Table 2-2 Oil Pumps for W-series Special Applications

Comp. Type	Pump designation	Name plate type	Remarks
12WB and 12-4WB	Type 12B	MD	–
WA, up to 650 min^{-1}	Type A, low speed	MA-T	Through hole on the shaft, nitro-carburizing processing
WA, R23 refrigerant	Type A, R23	MA-041	
WB single stage, R23 refrigerant	Type B 2, R23	MB-042	

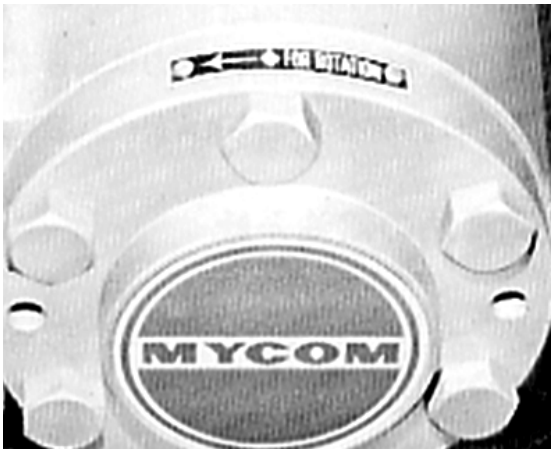

Before design change

After design change

External appearance of oil pumps before and after the February 2007 design change

2.1.5.3 Amount of Lubricant and Oil Pressure Adjustment

For both types WA and WB, the oil pressure is measured at the end of the oil supply line. The amount of lubricant is checked at the oil sight glass. The standard is when the oil level is at the center of the sight glass. You must supply oil when the oil level is too low to be observed.

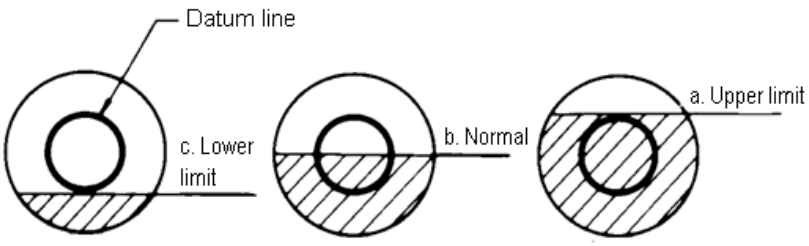

Figure 2-11 Management Criteria for the Amount of Lubricant

Table 2-3 Initial Amount of Lubricant to be Supplied (liters)

Model	2WA	4WA	6WA	42WA	8WA	62WA	4WB	6WB	42WB	8WB	62WB	12WB	124WB
Upper limit	6.5	16.0	16.6	16.6	19.8	20.6	24.9	29.8	30.7	31.2	32.1	59.5	62.5
Normal	5.0	13.5	11.9	11.9	16.3	16.9	19.9	24.0	25.4	25.6	26.2	48.0	50.5
Lower limit	3.5	11.5	7.5	7.5	13.0	13.4	15.4	19.4	19.7	20.3	20.9	38.8	40.5
With oil tank	–	30.0	30.0	30.0	35.0	35.0	40.0	45.0	46.0	50.0	50.0	70.0	70.0

The oil pressure is adjusted by the pressure control valve. Adjust the pressure control valve such that the oil supply pressure is 0.2 to 0.25 MPa (0.4 MPa maximum) higher than the suction pressure.
At the time of starting up the compressor, if the oil temperature is low and the resulting viscosity is high to cause high oil pressure, the spring will properly function to prevent an excessive high pressure, to some extent.

Pressure control valve for the main bearing head

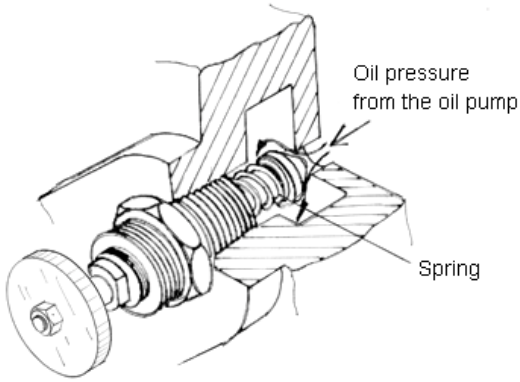

Figure 2-12 Pressure Control Valve Mechanism to Prevent Excessively High Pressure

2.1.6 Oil Cooler

There are two types of oil coolers used, i.e., refrigerant cooling type (liquid cooling/direct expansion) and water cooling type.

These are shell and tube type and shell and coil type. In the case of the shell and tube type heat exchanger, the oil is in the shell side. In the case of the shell and coil type, the oil is in the coil side.

In the past, shell and tube type coolers were generally used for fluorocarbon refrigerant while shell and coil type coolers were generally used for ammonia refrigerant. However, since 2000, it is the standard practice to use the shell and tube type coolers for both refrigerant types.

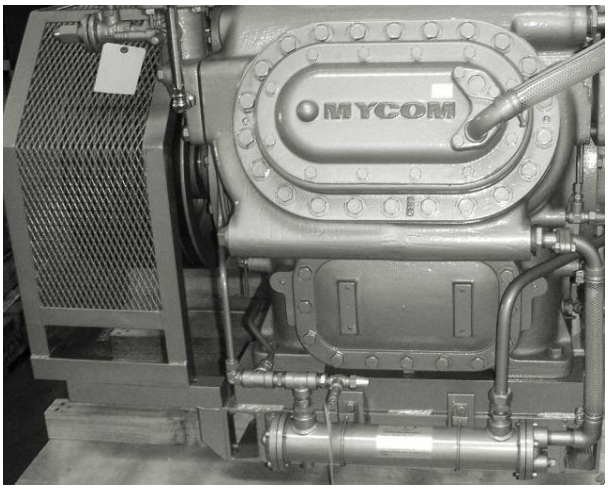

Water cooling type oil cooler

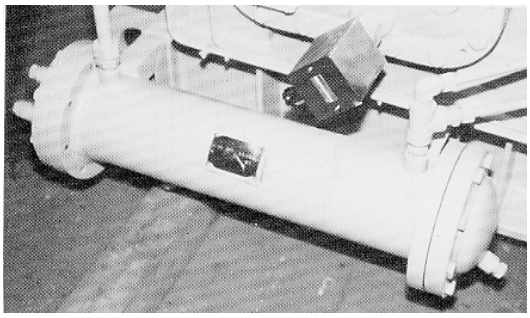

Direct expansion type oil cooler to use refrigerant

2.1.7 Shaft Seal and Thrust Bearing

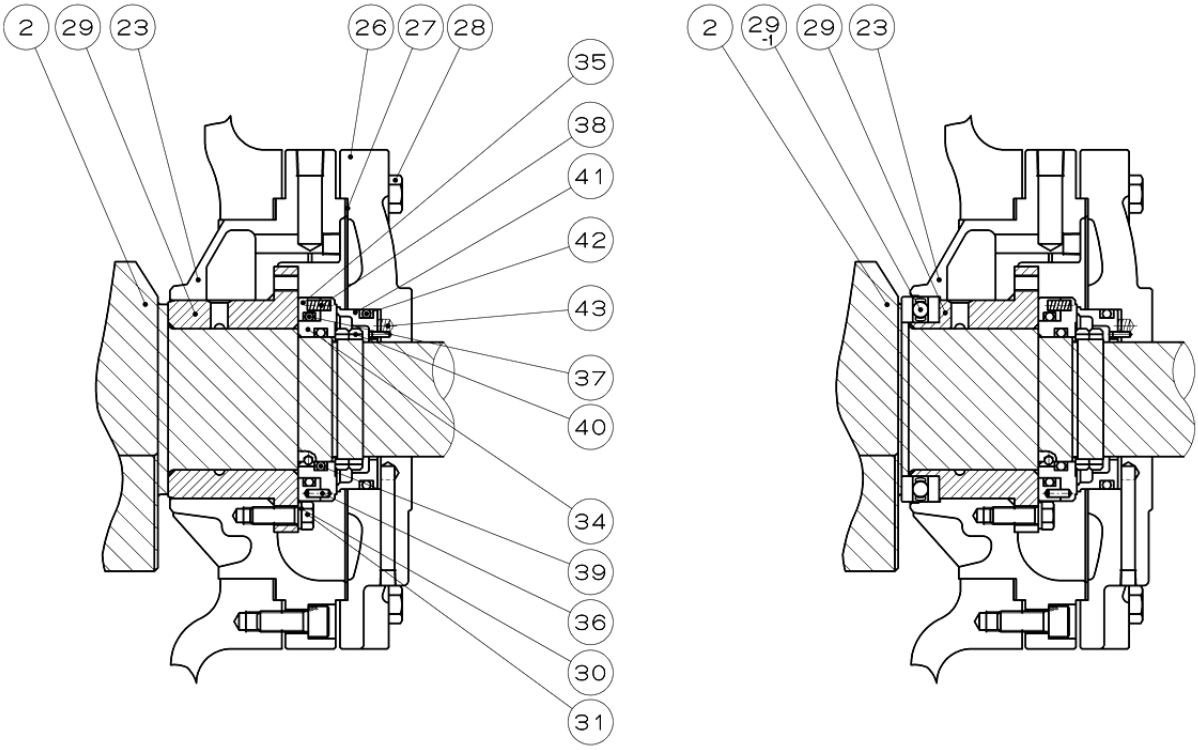

Thrust bearing Part (Standard type)

Thrust bearing Part (BB type)

Figure 2-13 Shaft Seal and Thrust Bearing

Table 2-4 List of Component Parts

No.	Name	Remarks
2	Crank shaft	BB type is available
23	Bearing head	BB type is available
27	Gasket, cover plate	
28	Cover plate fastening bolt	
29	Thrust bearing	
29-1	Ball/roller bearing (BB type)	NH3: Ball bearing (BB) Others: Roller bearing
30	Washer for thrust bearing fastening bolt	
31	Thrust bearing fastening bolt	
34	Double seal collar fixing ring	
35	Double seal collar floating seat	
36	Double seal collar lock pin	
37	O-ring for double seal collar	
38	Double seal collar spring	
39	O-ring for shaft seal collar	
40	Lock nut	
41	Shaft seal ring	
42	O-ring for shaft seal ring	
43	Helical spring	

2.1.7.1 Shaft Seal

Mechanical seals are used for the shaft seals for simple structure and high reliability. There are three sealing locations (boundaries) to separate the inside compartment of the compressor from the outside air.

- Fixed part: O-ring for the shaft seal ring of the cover plate
- Fixed part: O-ring for the double seal collar of the crank shaft
- Sliding part: The contact surface between the shaft seal ring and the double seal collar fixing ring

Degradation, scratch, nick, or other defect on the applicable part can cause leakage.

2.1.7.2 Thrust Bearing

There are two types of thrust bearing, i.e., one is the “standard” type, and the other is the “ball bearing” type (BB-type) thrust bearing.

The thrust bearing receives the thrust load caused by the pressure difference between the internal pressure and the atmospheric pressure.

If the internal gauge pressure (suction pressure) is to exceed 0.35 MPa, the standard thrust bearing will not be able to bear the load, and thus the ball bearing (BB) type thrust bearing must be used.
Refer to the note for Section 2.2.2, Table 2-7 for the details of the BB-type bearing.

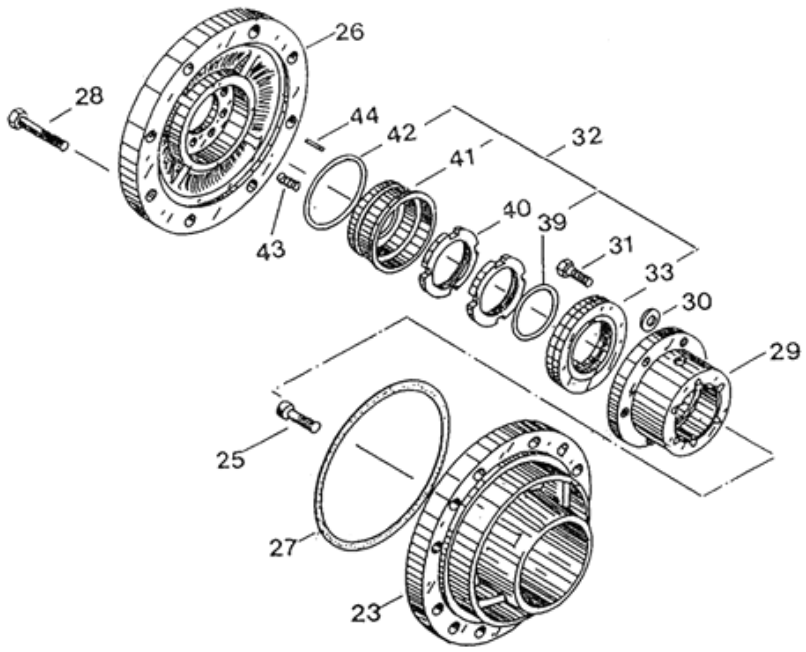

Figure 2-14 WA-type Shaft Seal Part and Thrust Bearing Part

2.1.8 Safety Valve

For the standard compressors to be used in Japan, the high pressure side is provided with an external safety valve.

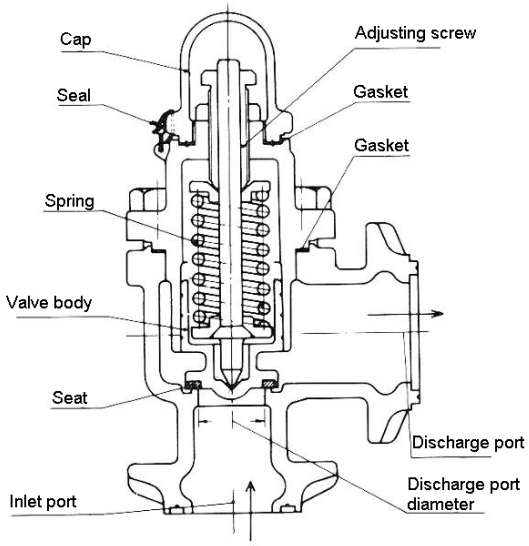

Figure 2-15 External Safety Valve

2.1.9 Oil Tank

In marine applications, oil tanks are often used. There are two types of oil tanks, i.e., one is the bottom type to be placed in the base structure, and the other is the side-holding type to be used for directly connected or common base structure. The former one is directly connected by flanges below the crank case. Inside the tank is an oil strainer.

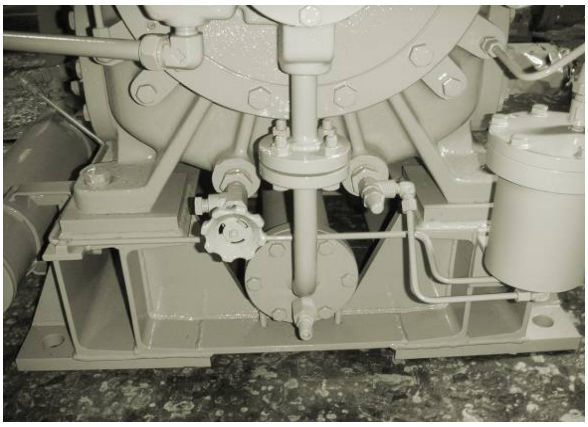

Bottom-type oil tank (connected by flanges to the crank case)

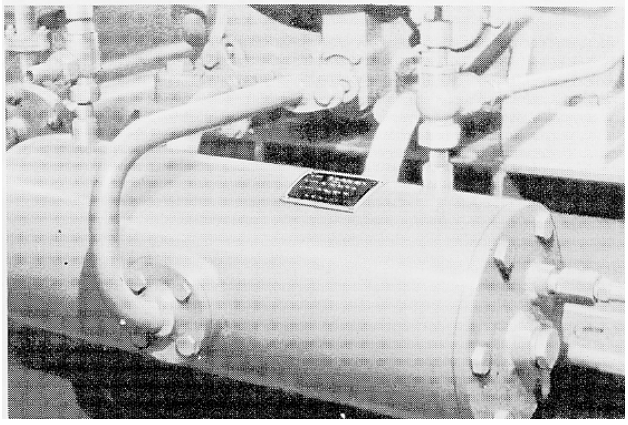

Side-holding type oil tank

2.2 Compressor Specifications

2.2.1 Standard Specifications

Table 2-5 Standard Specifications for the WA-type Compressors

Item			Unit	2WA	4WA	6WA	8WA	42WA	62WA
Number of cylinders			-	2	4	6	8	Low-stage: 4 High-stage: 2	Low-stage: 6 High-stage: 2
Bore × Stroke			mm	95×76					
Designed pressure			MPa	2.0					
Number of revolutions			min^{-1}	800 to 1100	800 to 1450				
Direction of rotation			–	Either direction (changing the direction of rotation requires changing the oil pump mounting orientation)					
Drive method			–	Direct drive / V-belt drive					
Displacement m^3/h	800 min^{-1}		m^3/h	51.69	103.38	155.07	206.76	59.96	64.10
	1000 min^{-1}		m^3/h	63.32	129.22	193.84	258.45	74.95	80.12
	1200 min^{-1}		m^3/h	71.07 (1100 min^{-1})	155.07	232.60	310.14	89.94	96.14
	1450 min^{-1}		m^3/h	—	187.37	281.06	374.75	108.68	116.17
Capacity control	Range		%	100	50, 100	33, 66, 100	25, 50, 75, 100	0, 50,100 (low-stage only)	0, 33, 66, 100 (low-stage only)
	Method		–	Hydraulic control Solenoid valve (unloaded when energized) / Manual valve (unloaded when opened)					
Lubricant	Selection		–	Refer to Chapter 4, Section 4.1 “Lubricant (Refrigerant Oil)” of this manual					
	Oil pressure		MPa	Suction pressure + 0.20 to 0.25 (0.4 Max.)					
Product mass			kg	370	580	700	820	720	840
Connecting pipe	Suction pipe	Since 2001		40A	50A	65A	80A	Low-stage: 50A High-stage: 40A	Low-stage: 65A High-stage: 40A
		Until 2000		40A	NH_3 50A Freon 65A	NH_3 65A Freon 80A	NH_3 80A Freon 90A	Low-stage: 50A High-stage: 40A	Low-stage: 65A High-stage: 40A
	Discharge pipe	Since 2001		40A	50A	65A	65A	Low-stage: 50A High-stage: 40A	Low-stage: 50A High-stage: 40A
		Until 2000		40A	50A	65A	NH_3 65A Freon 80A	Low-stage: 50A High-stage: 40A	Low-stage: 50A High-stage: 40A
	Pressure gauge			6 mm (Standard) / 8 mm (Marine use)					
	Cooling water pipe			20A					

■ Unless otherwise specified, the pressure unit “MPa” represents the gauge pressure in this manual.

■ The product mass includes the water cooling head cover, oil cooler, and V-pulley.

Table 2-6 Standard Specifications for the WB-type Compressors

Item			Unit	4WB	6WB	8WB	12WB	42WB	62WB	12·4WB
Number of cylinders			–	4	6	8	12	Low-stage: 4 High-stage: 2	Low-stage: 6 High-stage: 2	Low-stage: 12 High-stage: 4
Bore × Stroke			mm	130×100						
Designed pressure			MPa	2.0						
Number of revolutions			min^{-1}	800 to 1200						
Direction of rotation			–	Either direction (changing the direction of rotation requires changing the oil pump mounting orientation)						
Drive method			–	Direct drive / V-belt drive			Direct drive	Direct drive / V-belt drive		Direct drive
Displacement m3/h	800 min^{-1}		m^3/h	254.72	382.08	509.43	764.14	147.74	157.93	315.85
	1000 min^{-1}		m^3/h	318.40	477.59	636.79	955.19	184.67	197.41	394.82
	1200 min^{-1}		m^3/h	382.08	573.11	764.15	1146.23	221.61	236.89	473.78
Capacity control	Range		%	50, 100	33, 66, 100	25, 50, 75, 100	33, 66, 100	0, 50,100 (lower stage only)	0, 33, 66, 100 (lower stage only)	0, 33, 66, 100 (lower stage only)
	Method		–	Hydraulic control Solenoid valve (unloaded when energized) / Manual valve (unloaded when opened)						
Lubricant	Selection		–	Refer to Chapter 4, Section 4.1 “Lubricant (Refrigerant Oil)” of this manual						
	Oil pressure		MPa	Suction pressure + 0.20 to 0.25 (0.4 Max.)						
Product mass			kg	1100	1410	1550	3300	1440	1560	3900
Connecting pipe	Suction pipe	Since 2001		80A	100A	100A	Production terminated	Low-stage: 80A High-stage: 65A	Low-stage: 100A High-stage: 65A	Production terminated
		Until 2000		90A	NH_3 90A Freon 100A	NH_3 100A Freon 125A	90A	Low-stage: 80A High-stage: 65A	Low-stage: 90A High-stage: 65A	Low-stage: 125A High-stage: 80A
	Discharge pipe	Since 2001		80A	80A	100A	Production terminated	Low-stage: 65A High-stage: 50A	Low-stage: 65A High-stage: 50A	Production terminated
		Until 2000		80A	NH_3 80A Freon 90A	NH_3 90A Freon 100A	80A	Low-stage: 65A High-stage: 50A	Low-stage: 65A High-stage: 50A	Low-stage: 80A x 2 High-stage: 50A x 2
	Pressure gauge			6mm (Standard) / 8mm (Marine use)						
	Cooling water pipe			20A						

- Unless otherwise specified, the pressure unit “MPa” represents the gauge pressure in this manual.
- The product mass includes that of the water cooling head cover, oil cooler, and V-pulley. However, the mass of the flywheel is not included for the direct motor drive type 12WB and 12-4WB compressors.

2.2.2 Operation Limits and Operation Range

■ Operation limits

Table 2-7 Service Limits for the Compressor

Item	Unit	WA-type / WB-type	Remarks
Maximum discharge pressure	MPa	1.96	
Maximum suction pressure	MPa	0.35	If it exceeds 0.35 MPa and less than 0.59 MPa, select the BB type (refer to the comment below)
Minimum suction pressure	MPa	-0.073 (-550 mmHg)	
Maximum differential pressure at high/low pressure	MPa	Single stage machine: 1.47 Two stage machine: 1.52	
Maximum oil supply pressure	MPa	Ps + 0.4	Ps = Suction pressure
Minimum oil supply pressure	MPa	Ps + 0.10	Ps = Suction pressure
Maximum discharge gas temperature	°C	120 (Freon) 140 (NH_3)	
Maximum supply oil temperature	°C	50	Temperature at oil cooler outlet port
Minimum supply oil temperature	°C	30	
Cooling water outlet temperature	°C	50 or less	Temperature at jacket outlet
Cooling water pressure	MPa	0.5 or less	
Degree of superheat: SH	°C	20 or less	Liquid flow-back is not allowed.
Maximum belt drive power	kW	WA-type: 75 WB-type: 115	

- Unless otherwise specified, the pressure unit “MPa” represents the gauge pressure in this manual.
- Refer to Chapter 4, Section 4.4.1 “Start/Stop Limit” of this manual for the limitations (start and stop limits) to be applied when the running compressor is stopped and restarted.
- BB (Ball bearing) specification

  The standard specification for the W-series compressors assumes the operation limit suction pressure of 0.35 MPa. If the suction pressure is more than 0.35 MPa and less than 0.59 MPa, you can use the compressor by choosing the BB (ball bearing) type specification.

  The BB specification model will have a special crank shaft, bearing heads, and thrust bearings that are exclusively used for the BB-type models.

  For BB-type models, two types of thrust bearing portions are used. The combination of thrust bearing and ball bearing is used for ammonia refrigerant, and the combination of thrust bearing and roller bearing is used for other refrigerants.

2.2.3 Outer Dimensions

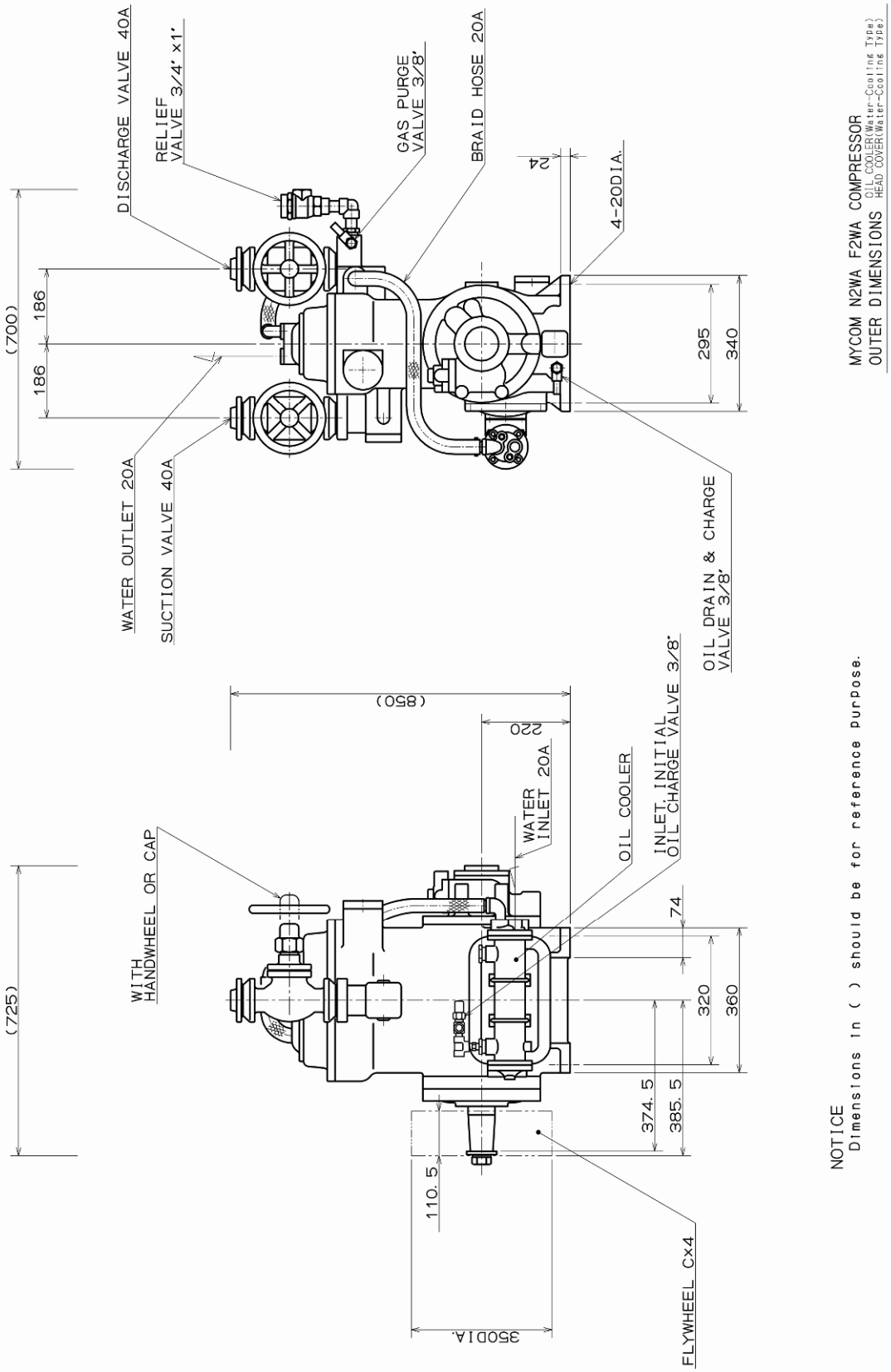

Figure 2-16 Outer Dimensions Diagram 2WA

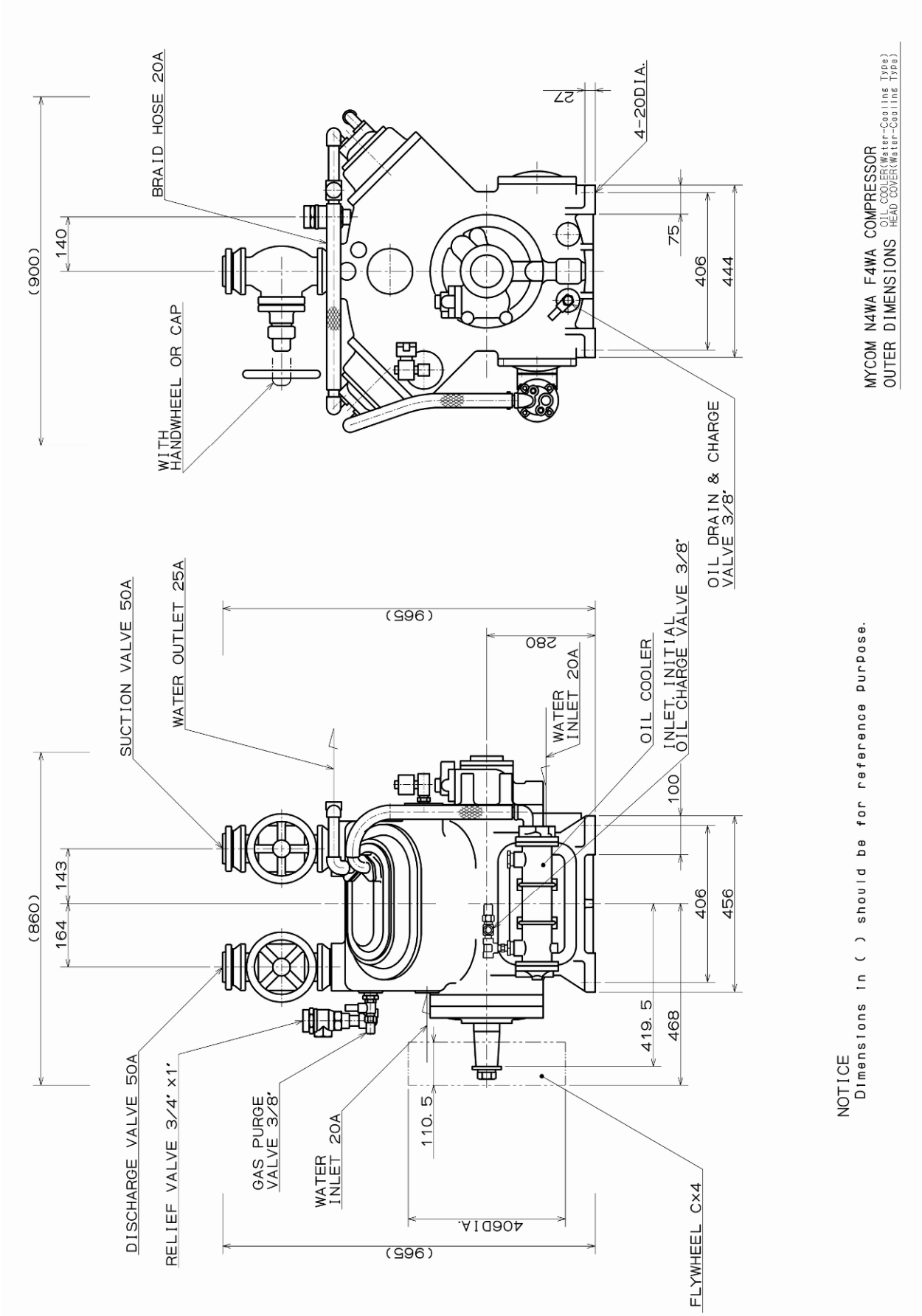

Figure 2-17 Outer Dimensions Diagram 4WA

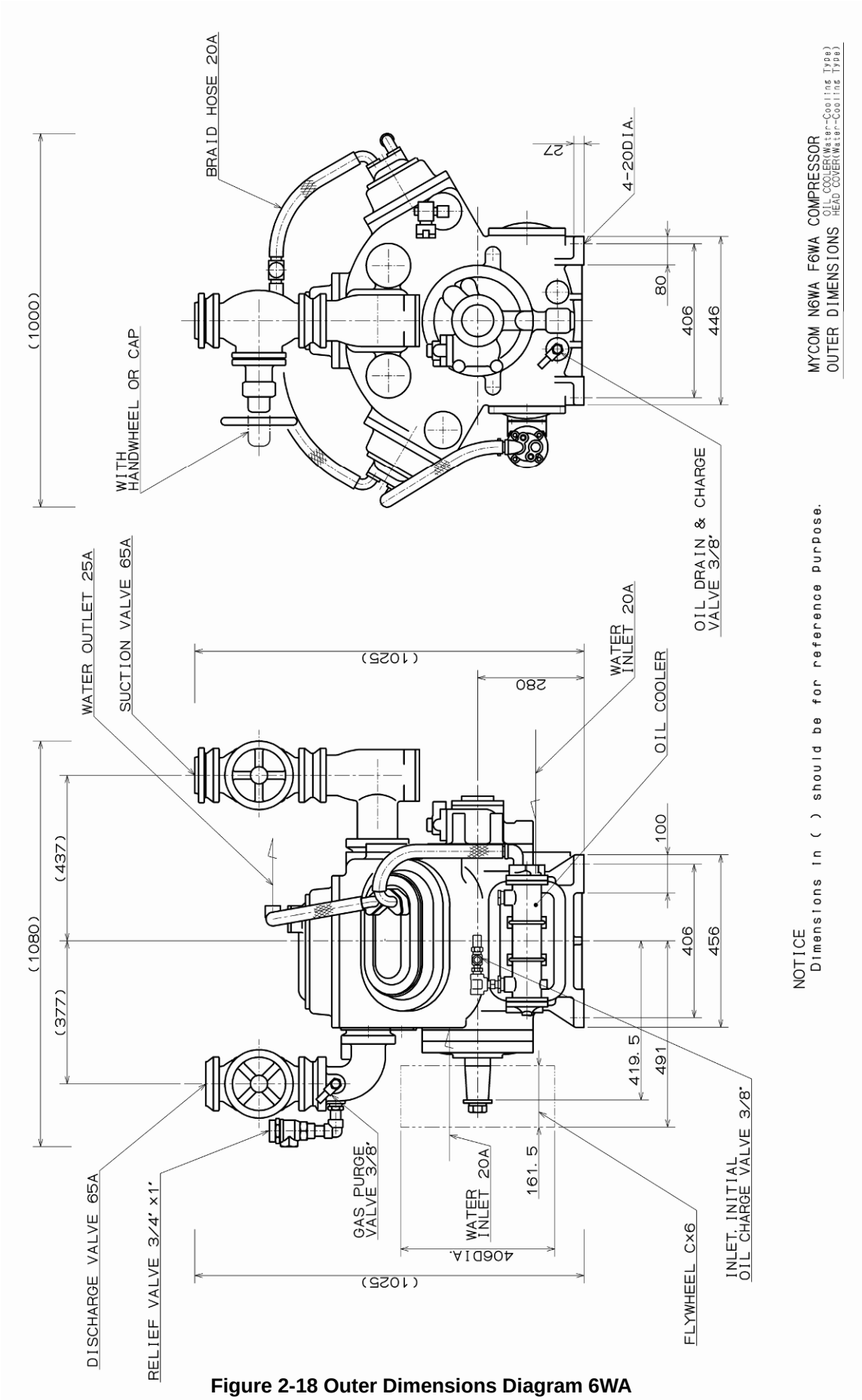

Figure 2-18 Outer Dimensions Diagram 6WA

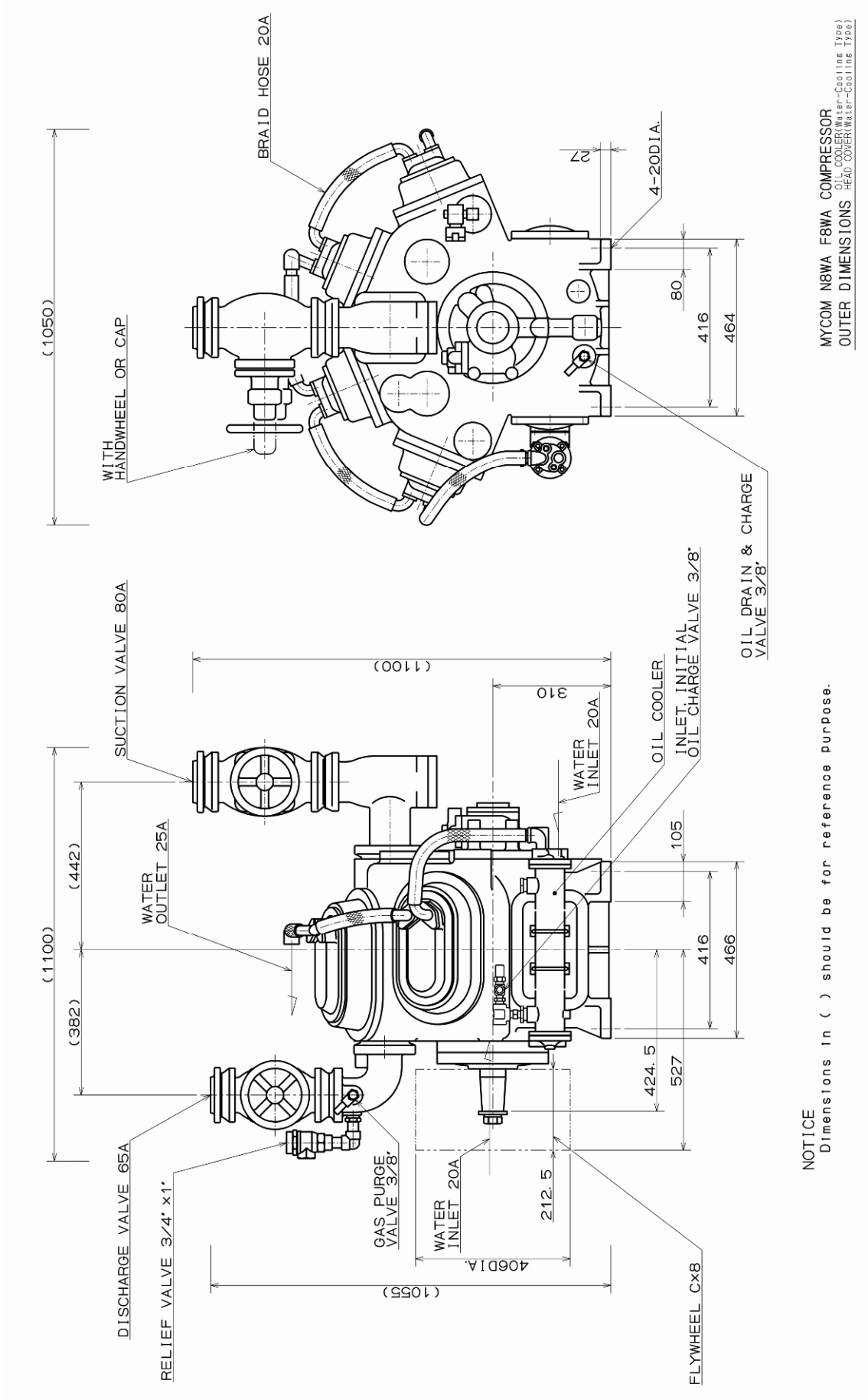

Figure 2-19 Outer Dimensions Diagram 8WA

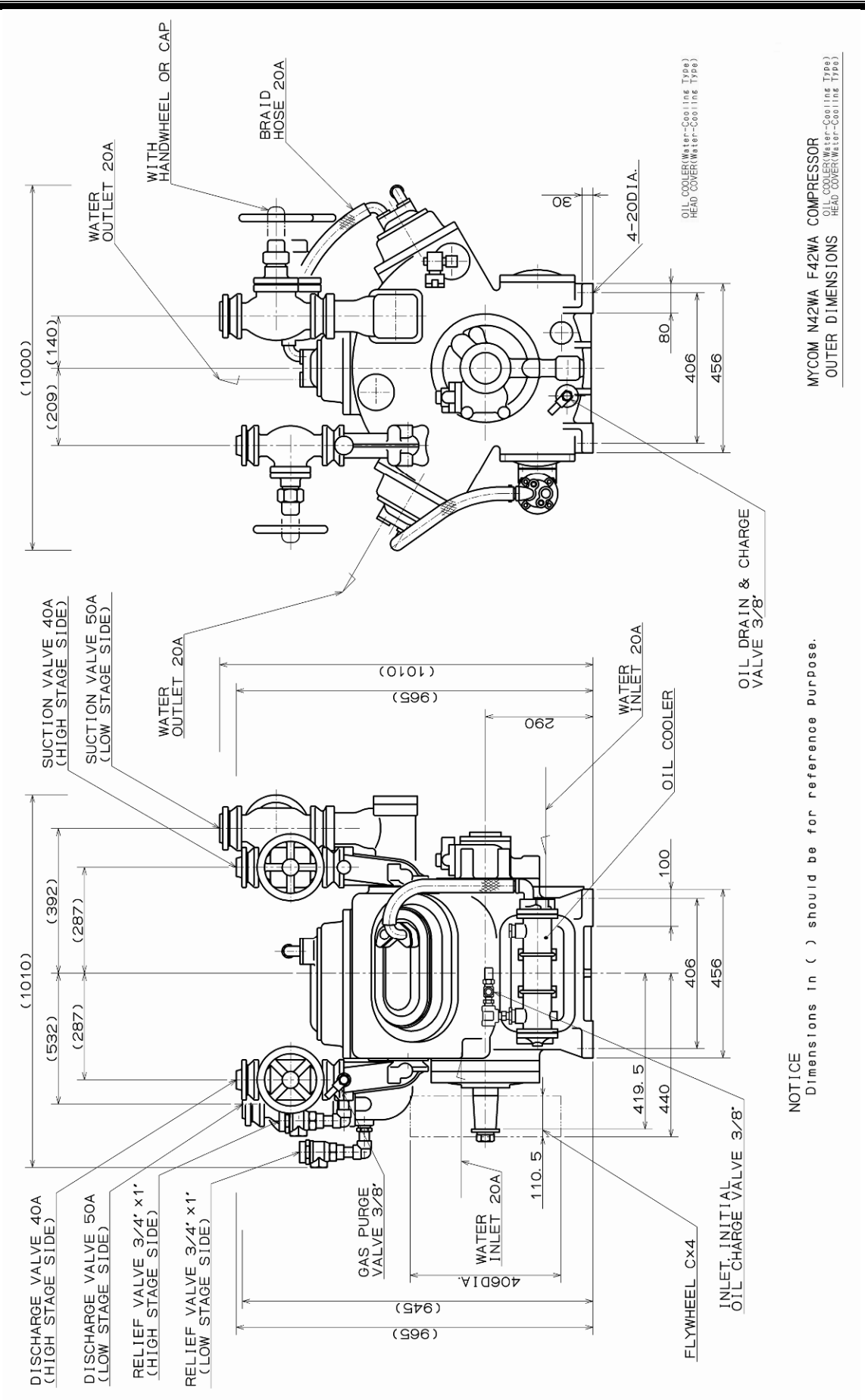

Figure 2-20 Outer Dimensions Diagram 42WA

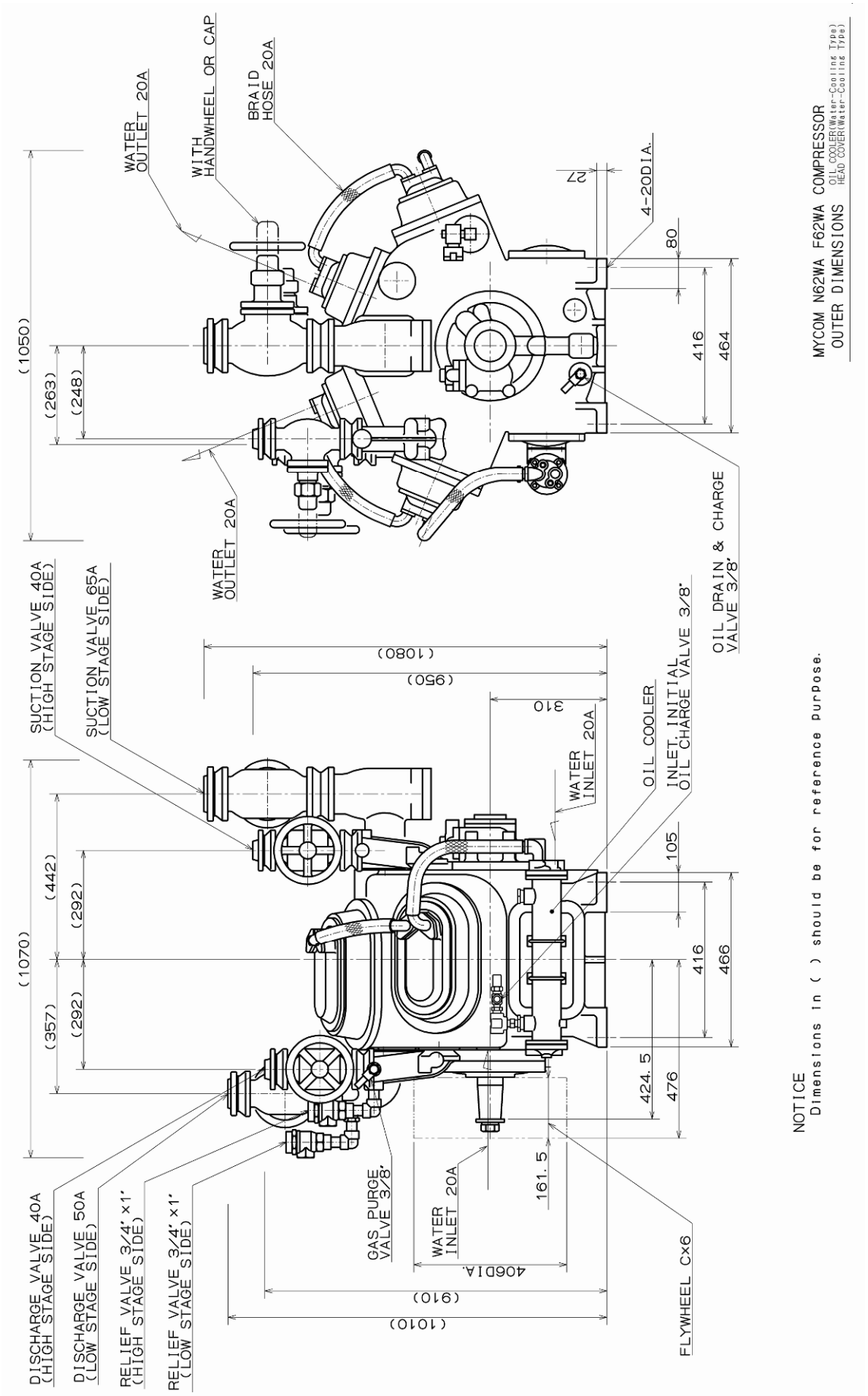

Figure 2-21 Outer Dimensions Diagram 62WA

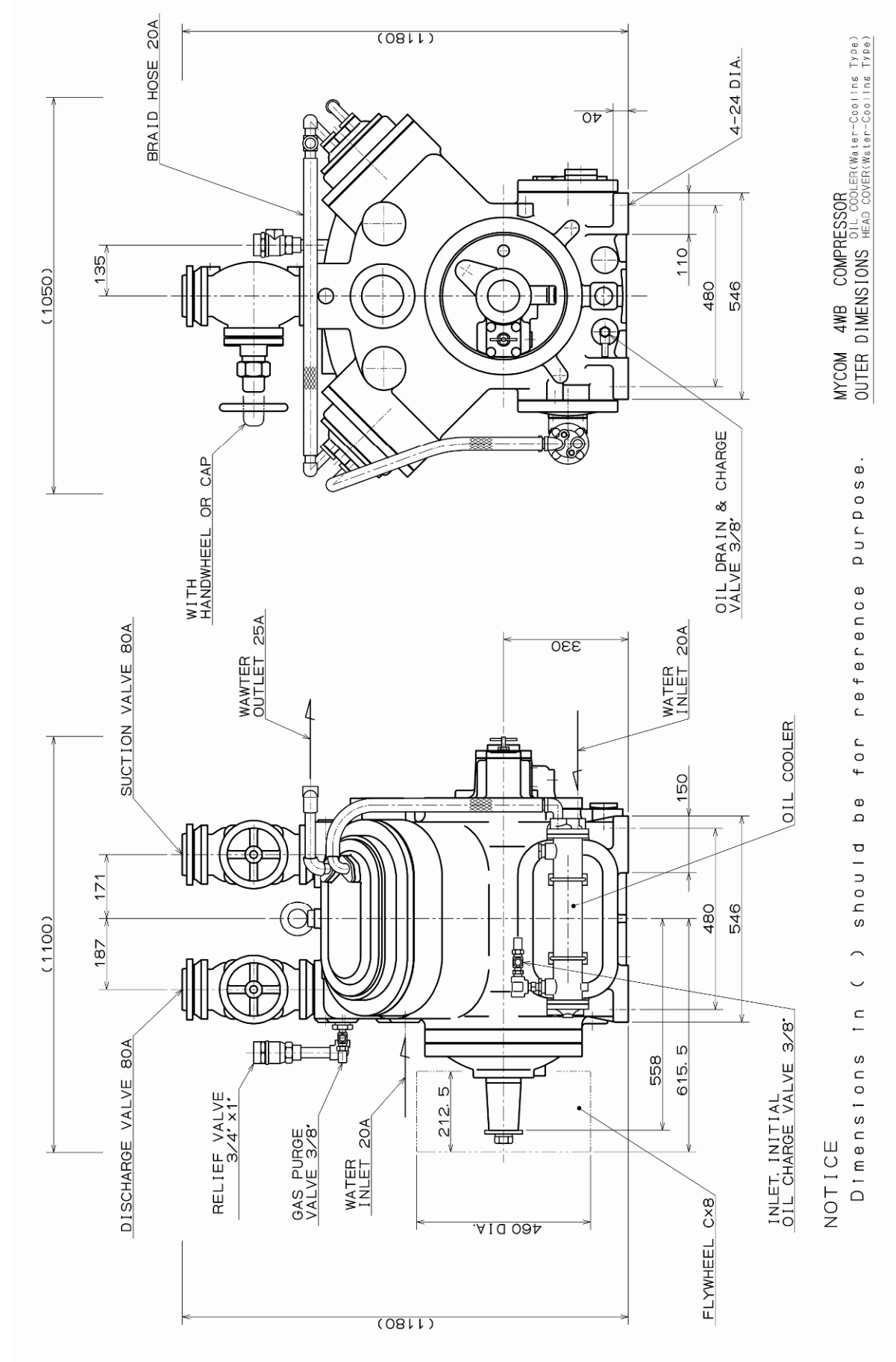

Figure 2-22 Outer Dimensions Diagram 4WB (for reference)

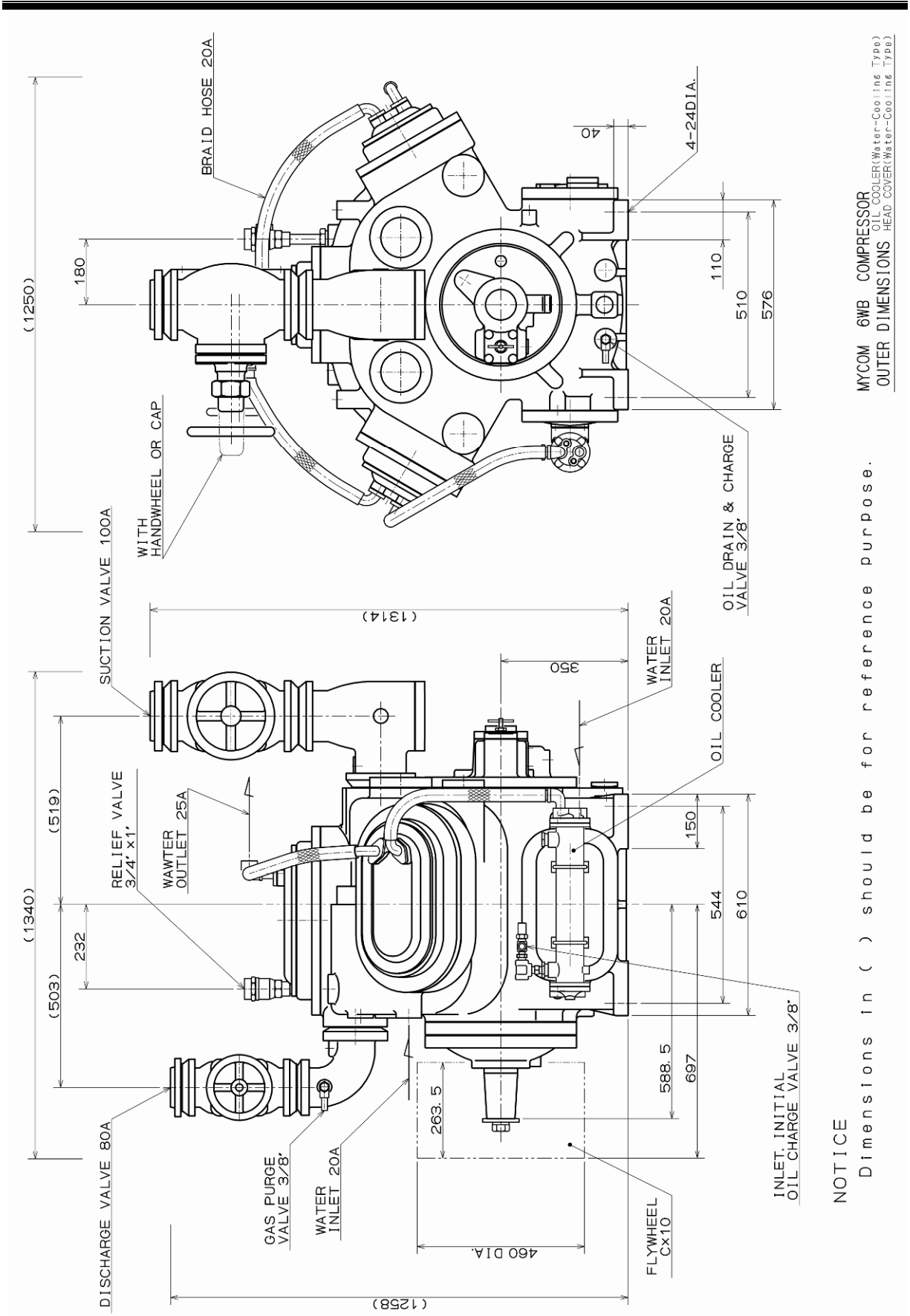

Figure 2-23 Outer Dimensions Diagram 6WB (for reference)

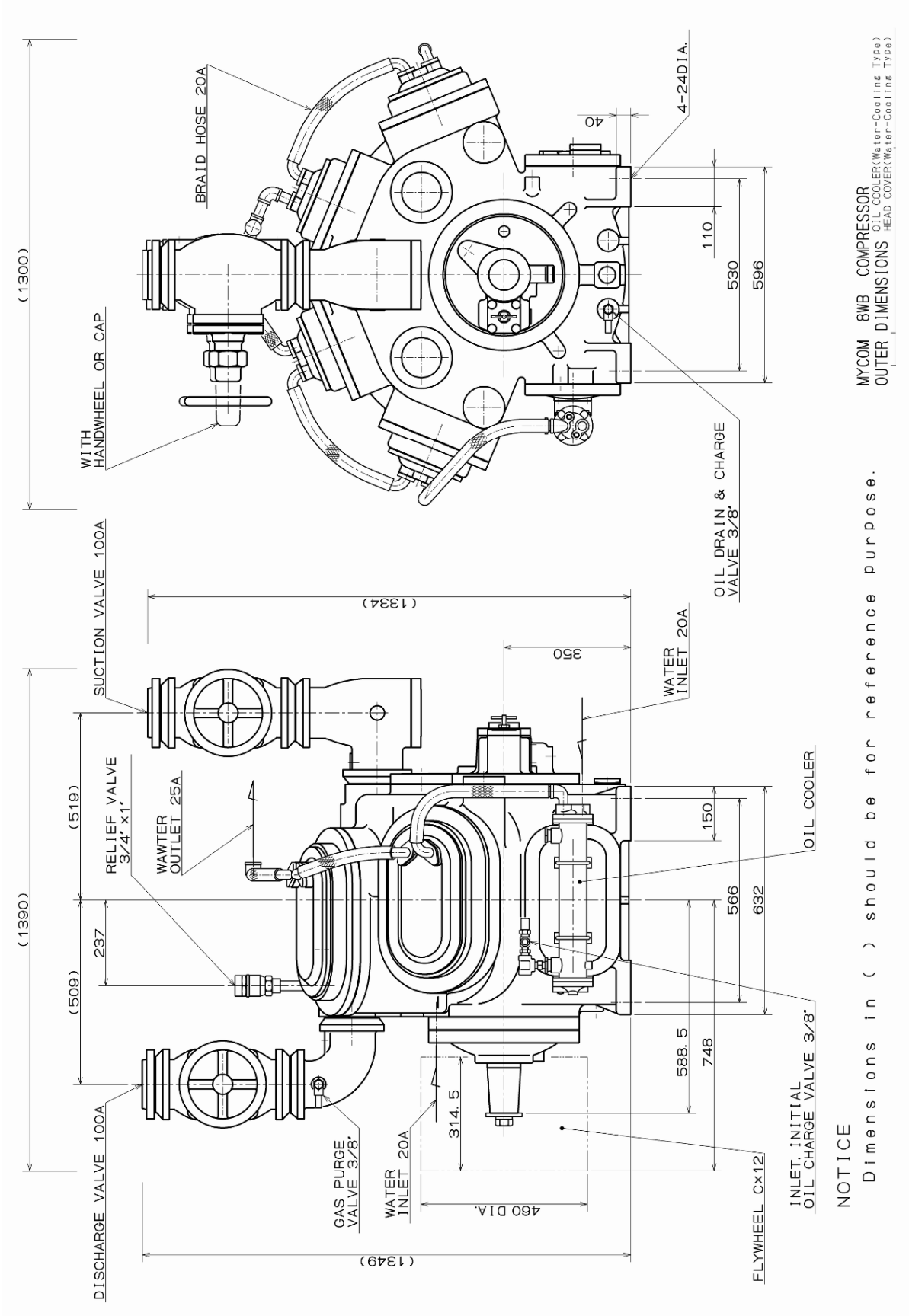

Figure 2-24 Outer Dimensions Diagram 8WB (for reference)

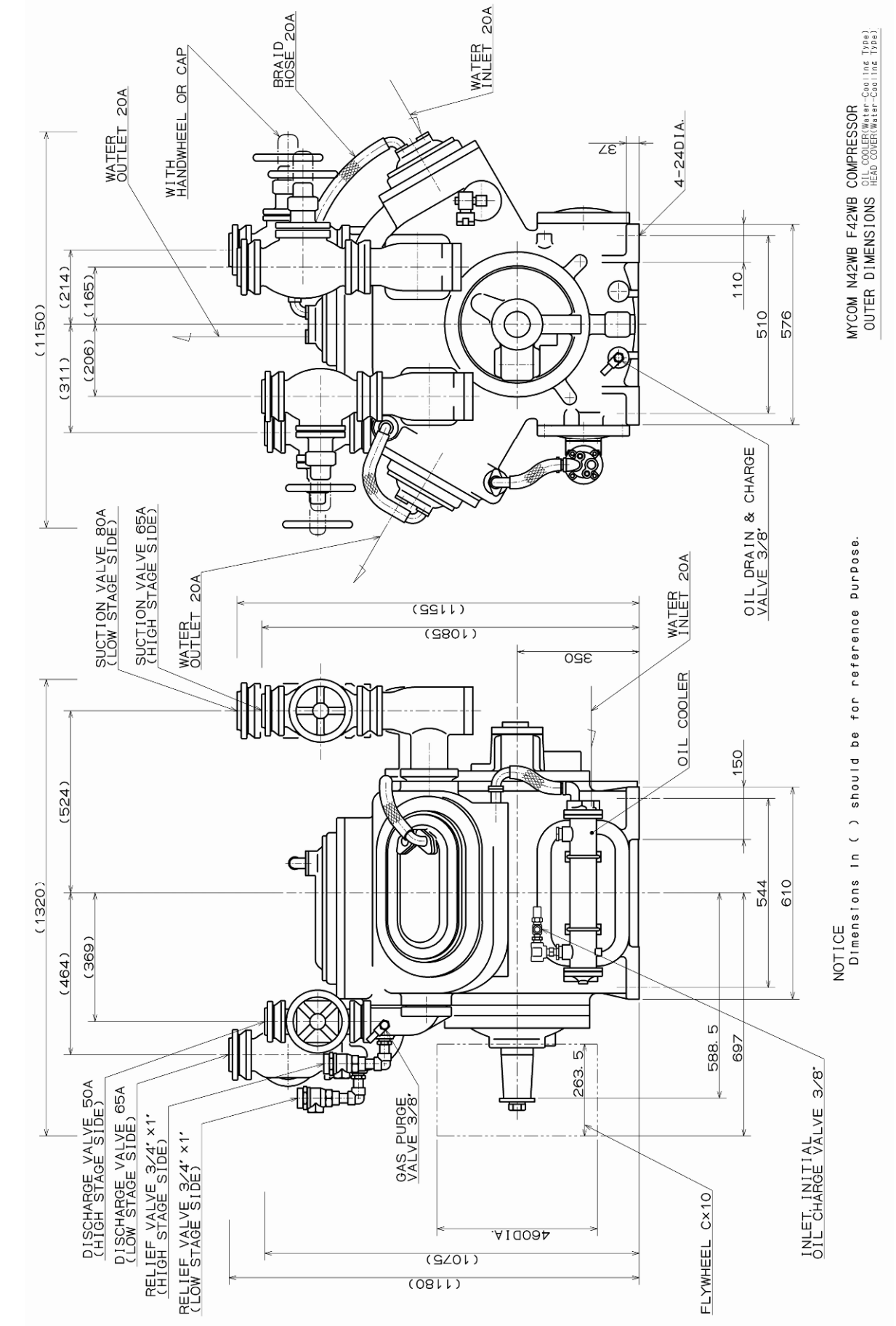

Figure 2-25 Outer Dimensions Diagram 42WB (for reference)

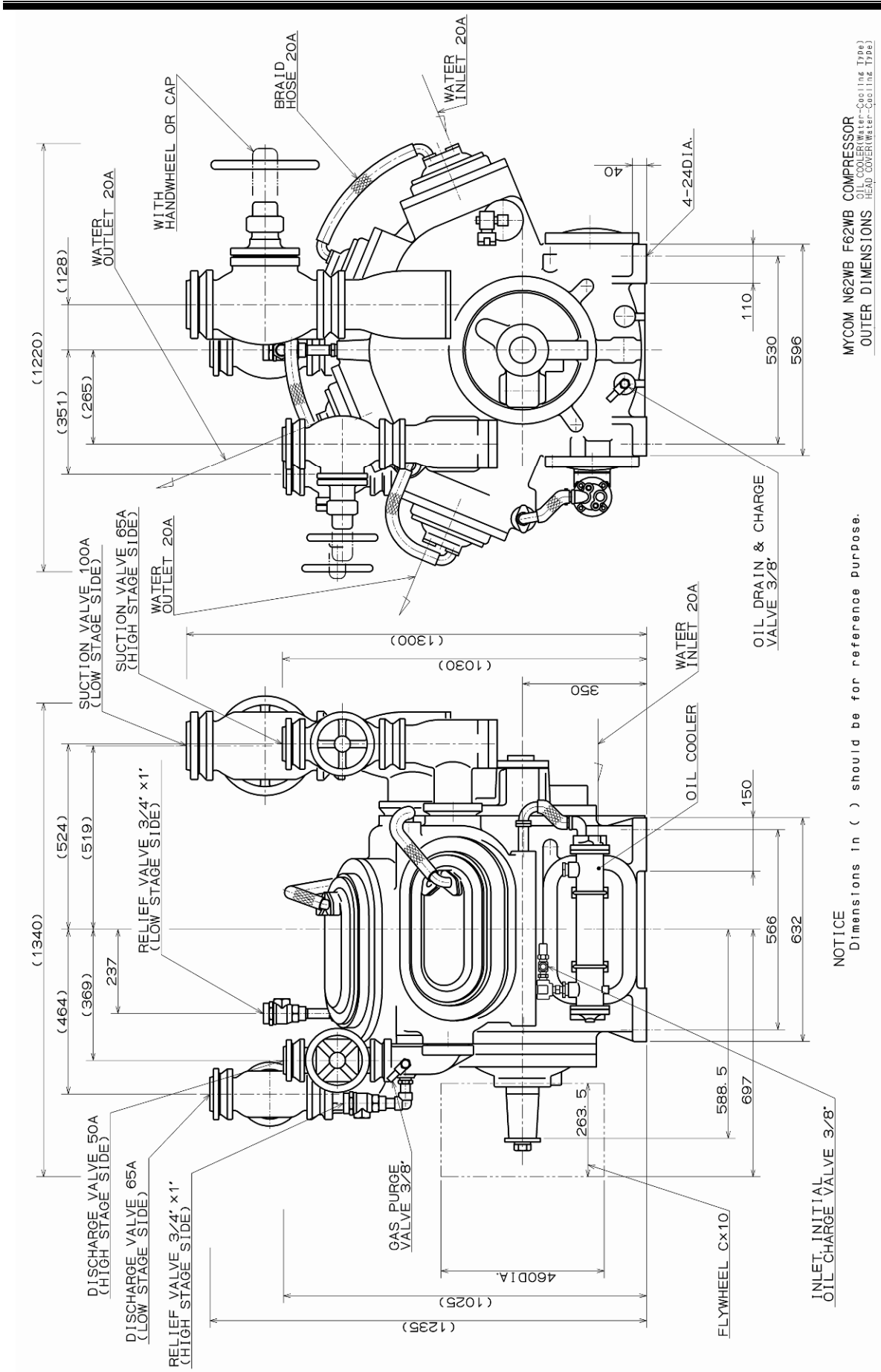

Figure 2-26 Outer Dimensions Diagram 62WB (for reference)

2.3 V-pulley

Table 2-8 V-pulley Chamfer Specification

V-pulley	Model						
	2WA	4WA 42WA	6WA 62WA	8WA	4WB 42WB	6WB 62WB	8WB
Outer diameter	350	406	406	406	460	460	460
Chamfer specification	C4	C4	C6	C8	C8	C10	C12

2.4 Direct Coupling

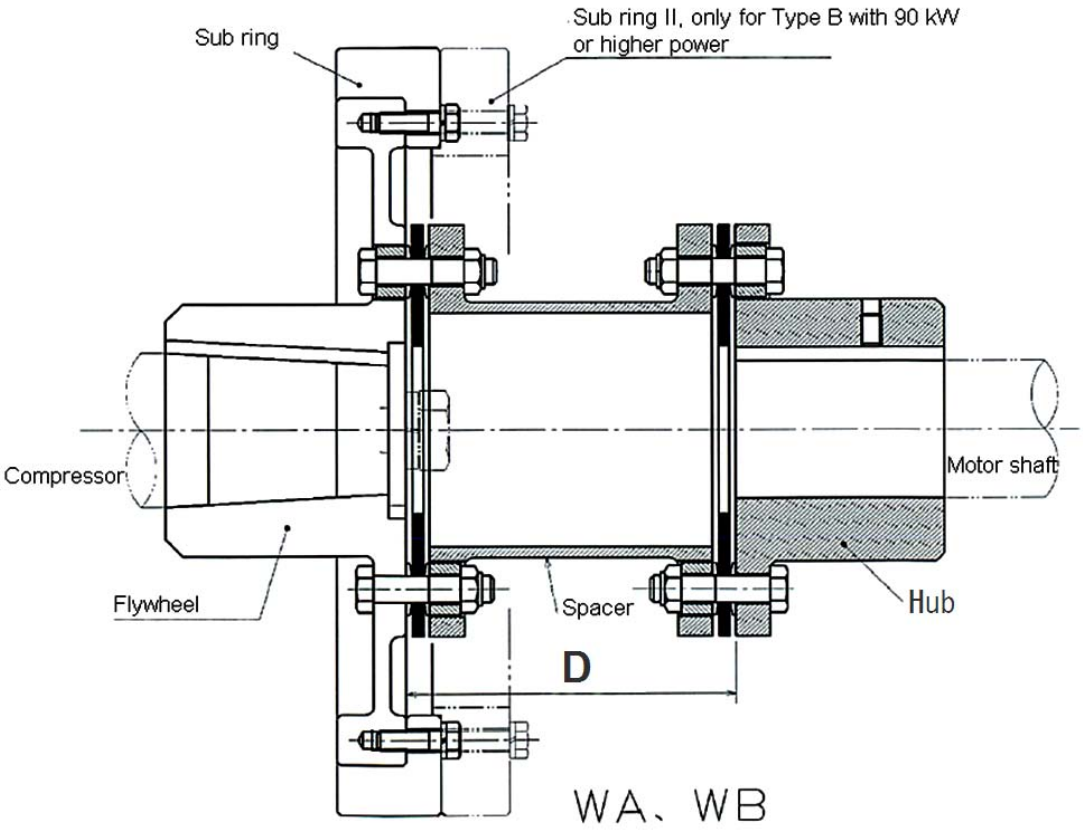

Figure 2-27 Sectional View of Direct Coupling

Table 2-9 Direct Coupling

Model	Coupling name	Coupling type	D (mm) in Figure 2-27
A, WA	BB-290	A4-40-PN-139.7	Standard (139.7)
B, WB, WBH	BX-600-142.7	AB-50-PN-190.5	Custom (190.5)
B, WB, WBH, 12WB (90 kW or more)	GB03-190.5	GB-03-PN-190.5	Custom (190.5)

Chapter 3 Installation

3.1 Safety Precautions during Installation

[**POINT**]

- The description in Chapter 3 “Installation” assumes that the compressor is installed to a package unit intended for standard type refrigeration/cold storage.
  If the package unit you are actually using is not the one for standard type refrigeration/cold storage, prepare a proper installation manual by referring to the description in this chapter and paying due consideration to safety, before installing the compressor.
  If there are any questions, please contact one of our local sales offices or service centers.

- In some cases, it may be required that installation is performed by qualified personnel. Make sure that the work is performed by qualified personnel in compliance with local laws, ordinances and other regulations/requirements.
- Read this chapter and related documents, and fully understand their contents before performing installation.
- Electrical works should be performed only by electrical engineers.

3.2 Installation Work

3.2.1 Unpacking

Check that the compressor is free from any damage or abnormality.

[**POINT**]

- If there is any abnormality or missing part with the compressor, please contact one of our sales or service establishments.
- All packing materials that are no more needed after unpacking must be disposed of in a carefully controlled manner in accordance with the applicable laws, regulations, and any voluntary regulations of the customer.

3.2.2 Storage

If the compressor is to be stored before the installation:

- Keep it indoors, and
- Fill the compressor with Nitrogen gas and seal it (at the gauge pressure of approx. 0.15 MPa).

[**POINT**]

- Upon packing, the compressor is filled with Nitrogen gas to prevent rust.

3.2.3 Transportation

DANGER

- **Should the compressor being lifted up drop, there is a high risk of death or severe injury. Provide sufficient protection such that no one can enter an area below a compressor being lifted up.**

For the weight of the compressor, refer to Table 2-5 “Standard Specifications for the WA-type Compressors” or Table 2-6 “Standard Specifications for the WB-type Compressors” in Chapter 2, Section 2.2.1 of this manual. For the outer dimensions, refer to Chapter 2, Section 2.2.3 “Outer Dimensions” of this manual.

1. When lifting the compressor, be sure to prepare and use a lifting device and other proper tools capable of lifting the compressor weight within the specified safety load limit.
2. A sufficient space must be provided to ensure that the lifting work can be safely conducted.
3. Make sure to check the wire ropes before use. Carefully check the wire ropes for any kink, knot, or broken strand. Never perform the lifting work before it has been confirmed that the wire ropes have no problems. If any doubt remains, ask a qualified specialist to check the condition.
4. If only the compressor body is to be lifted, use the eye bolts of the compressor to hook the wire ropes.
5. If the base structure and motor are attached to the compressor, use the eye bolts of the compressor and the base structure to hook the wire ropes. Never use the eye bolts of the motor.
6. Check that the transportation path is free from any obstacles that can hinder smooth transport, according to the size of the compressor.
7. Before lifting, check that the hook is positioned above the center of gravity of the compressor.
8. Before starting to lift up the compressor, instruct all the workers to be sufficiently away from the lifting area.
9. Just before starting to lift up, provide the coworkers with a sign (such as a call, hand signal, etc.) of starting the lifting action. Do not start to lift up unless the sign (such as a call, hand signal, etc.) has been fully acknowledged.
10. Slowly wind the wire ropes up to the point the compressor is about to leave the ground.
11. Then, wind up the wire ropes a little further until the compressor is slightly up away from the ground. Check that the compressor is not tilted. If the compressor is tilted, return the compressor to the ground and correct the tilt by adjusting the wire ropes. After that, restart the lifting operation.
12. Slowly lift up the compressor. A sudden lifting may cause damage to the wire ropes and/or other hoisting tools or some part of the compressor.
13. After the hoisting has started, check the condition to see that the wire ropes and other hoisting tools are in normal condition. Check that the compressor is not tilted.
14. When moving the compressor in the lifted condition, be sure to use guiding ropes.
15. Evacuate people from the forward path and check the safety in the direction of the movement.
16. Do not lift the compressor above the safety passage unless absolutely necessary.
17. Do not place the compressor on a safety passage. The safety passages shall always be kept unblocked.
18. Before lifting down the compressor, clear the area from any obstacles. Make sure the compressor will not be tilted or become unstable.
19. When lifting down the compressor, also notify the coworkers around the area of the fact.
20. If the compressor is to be placed on two or more blocks, properly adjust the height of each block for the compressor to be stably leveled on the blocks.
21. Be sure to carefully and gradually lift down the compressor so that it is not damaged by shock.

3.2.4 Preparation for Installation

■ Installation space

Prepare an installation space where the operation, cleaning, maintenance, and inspection work can be easily performed by referring to the relevant figures in Chapter 2, Section 2.2.3 “Outer Dimensions” of this manual.

Because the crank shaft must be taken out from the main body during an overhaul work, a sufficient space must be provided on the bearing head side, for a length corresponding to the full width of the crank shaft, as measured from the crank case end. Also on the opposite main bearing side, a space of more than 60% of the full crank shaft length shall be provided.

In addition, along the direction of taking out the cylinders, a clearance of at least 500 (650) mm shall be provided for the WA-type (WB-type), to avoid interference with other components such as pipes.

■ Lighting

Provide sufficient lighting to allow easy operation, cleaning, maintenance, and inspection work.

■ Ventilation

If natural ventilation is not sufficient, install proper ventilation fans according to the laws and regulations.

■ Cooling water

Ensure that a sufficient amount of cooling water is provided as required by the customer’s system.

■ Piping

Refer to the relevant figures in Chapter 2, Section 2.2.3 “Outer Dimensions” of this manual.

3.2.5 Installation

3.2.5.1 Placement

Make sure that the compressor mounting surface of the target refrigeration, cold storage, or air conditioning system is sufficiently flat and level. If it is not sufficiently leveled, tightly fastening the compressor mounting bolts can cause deformation of the compressor and could hinder normal operation.

3.2.5.2 Return Oil from Oil Separator

Use a float valve, and do not return oil from the receiver.

3.2.5.3 Protection Device

To protect the compressor and prevent accidents, install the following protection devices.

For details, refer to Chapter 1, Section 1.4.5 “Automatic control and protection for the compressor” of this manual.

- Reduced oil pressure protection device (OP)
- High pressure protection device (HP)
- Low pressure control device (LP)

3.2.5.4 Piping

The vibration of the compressor will be transmitted to the building via the base structure and the pipe lines. Be careful about the installation of piping supports to prevent possible resonance of the building.

■ Refrigerant piping

Be careful about the following points in connecting the refrigerant pipe line:

- The compressor is one of a few components that have movable parts in the target system. Such movable parts are vulnerable to dust, dirt, and other foreign matters. Be careful during the plumbing work not to put scales and other foreign matters inside the compressor.
- Some compressors (mainly the ones to be shipped overseas) are filled with Nitrogen gas to prevent rust. Therefore, do not open the suction/discharge stop valves until it is needed to do so.
- There must be no moisture in the piping system. Any moisture inside can cause troubles after the operation has started. Be sure to connect pipes in dry condition.
- Improper work on the suction gas piping can cause problems such as no oil return to the compressor and liquid hammering.
- When connecting a pipe to the compressor, be sure to use the same pipe size as that of the compressor. If the size of the connecting pipe is smaller than that of the compressor, the flow of the oil or refrigerant is impeded and can cause problems.
- Every connecting pipe must have a support for not to apply excess stress to the compressor. Also, if vibration isolators are used for the base, the piping system must use suitable flexible tubes.
- If generation of dew is expected for the pipe, it must be isolated.

■ Cooling water pipe

Refer to the cooling water pipe system illustrated in Section 5.5.1 of this manual.
General precautions are as follows:

CAUTION
● **No branching is allowed in the cooling water system from the oil cooler to the head jacket. Otherwise, the resulting pressure loss (resistance) difference can stop the flow of the cooling water at some places, and it is very dangerous.** ● **Overheating of the compressor will easily degrade the oil on the discharge side. Be sure to operate the compressor with a sufficient flow of water.**

If water-cooled oil cooler and water-cooled head cover are used, pay sufficient attention to the following points when connecting the cooling water pipes:

- In the case of automatic operation, use a solenoid valve to prevent water flow when the motor is stopped. If water flow is maintained while the motor is not operating, the refrigerant in the refrigerator can condense, and as a result, it can cause increased oil consumption, valve damage, and/or seizure of cylinders.

3.2.6 Center-to-center Alignment between the Compressor and Drive Mechanism (V-belts Drive)

CAUTION

- **If any V-belt is to be replaced by a new one, replace all the V-belts together as a set, by procuring a set of V-belts.**
  Even if the nominal dimension is the same, the length may vary to some extent. In such a case, the force may be applied only on the shortest one, and it can damage the belt or cause abnormal vibration.
  Also, if new and old belts are mixed together, it can cause abnormal vibration due to the different levels of wear.
- **The V-belts must be kept free from oil or grease. Wipe out any oil or grease if attached.**

[**POINT**]

- Although the V-belts are tensioned to the specified initial tension at factory shipment of the V-belts drive unit, initial elongation before they are actually used for operation may result in the tension less than the minimum tension load. Be sure to check the tension load after the installation, and adjust it to the correct tension load for new belts before starting the operation.

3.2.6.1 Alignment Method and Criteria

Check that the centerline of the refrigerator shaft and the centerline of the motor shaft are exactly parallel with each other by using a stretched string from the side of the compressor V-pulley to the side of the motor pulley. If they are misaligned, the high speed rotation accelerates the wear of belts, applies excessive stress on the bearings, and shortens the service life of the refrigerator and motor.

Alignment criteria: L = 1 mm max.

Figure 3-1 Alignment Criteria

3.2.6.2 Belt Tensioning

Loosen the slide base of the motor to get the pulleys of the compressor and motor closer, and place the V-belts into their slots in the loosened state. After checking that the V-belts are correctly placed into the V-grooves, apply tension to the belts by pulling the motor by fastening the bolt.

Deflection = 0.008 × span length (mm) (Span length is nearly equal to the wheelbase)

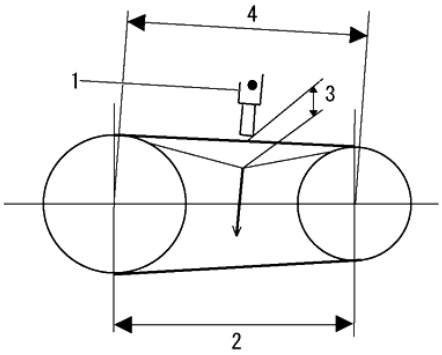

1: Tension meter
2: Wheelbase
3: Deflection
4: Span length

Figure 3-2 Deflection

Table 3-1 Quick Reference for the Deflection (mm)

Compressor	V-belt type	Wheelbase					
		1000	1100	1200	1300	1400	1500
WA-type	C-type standard & red	16	18	19	21	22	24
WB-type							

Table 3-2 Quick Reference for Tension Load (N per belt)

Compressor	V-belt type	New belt	Re-tensioning	Minimum tension load
WA-type	C-type standard & red	40 to 45	30 to 35	25 min.
WB-type				

Note 1: The first re-tensioning shall be made 2 to 3 hours after the operation has started.

Note 2: To check the tensioning of the V-belts, rotate the pulley to check the tension load.

Note 3: When the minimum tension load is used, as it varies with the load condition, make sure that the belts do not act violently during operation.

Note 4: The re-tensioning after one year's operation shall be 25 N per belt.

[**POINT**]

- When new belts are used for 2 to 3 hours for the first time, the initial elongation, initial friction, and removal of V-pulley paint will significantly reduce the tension load of them, to result in a load less than the minimum tension load. If the use of the V-belts is continued in this condition, not only the slippage of V-belts can reduce the service life of the belts but also can the belts act violently, turn over due to one-sided wear, disengage, or cause other problems. Be sure to re-tension the belts after the commissioning.
- Insufficient tension will reduce the service life of the belts. If the belts are replaced by new ones, check the tension again after they have been used for 24 to 48 hours.

3.2.7 Center-to-center Alignment between the Compressor and Drive Mechanism (Direct drive)

In the case of a direct drive, adjust the center-to-center alignment between the compressor and the drive mechanism to within the allowable limit given in the table to the right.

Table 3-3 Allowable Misalignment

	Allowable limit
Eccentricity	6/100 mm
Deflection angle	3/100 mm (referenced to 100 mm diameter)

The concept of the measurement setup to use a special hub, dial gauge, and magnet stand is shown in Figure 3-3 and Figure 3-4 for the eccentricity and deflection angle measurements, respectively. If more details are required regarding the alignment work, please contact one of our sales offices or service centers.

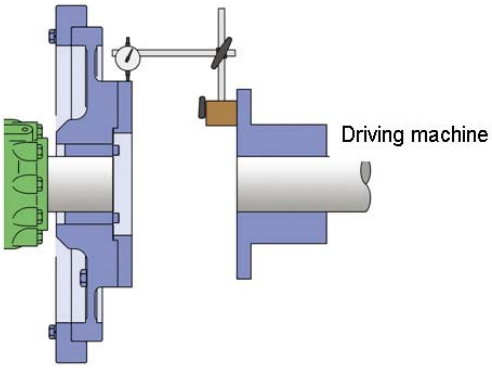

Figure 3-3 Shaft Eccentricity Measurement

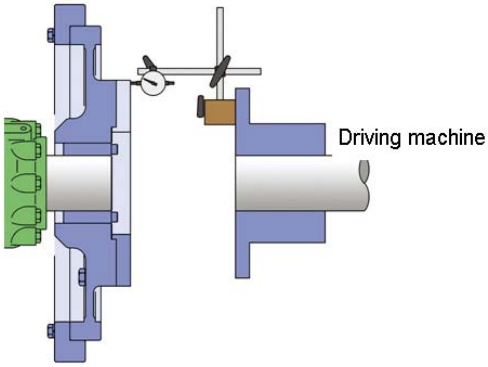

Figure 3-4 Shaft Deflection Angle Measurement

3.2.8 Initial Charge

3.2.8.1 Lubricant

Perform initial charge of the lubricant by referring to Chapter 4, Section 4.1.3 “Initial Charging Method”.

3.2.8.2 Refrigerant

Fill the refrigerant according to the instruction manual for the package unit.

3.2.9 Checkout after Installation

The customer is requested to develop its own checklist and checkout procedures appropriate to the customer’s own refrigeration, cold storage, or air conditioning system, by using the following summary descriptions on the inspection items to be checked after installation of the compressor as a reference material.

- **Wiring for the automatic control**
  - Wiring between the control panel and switches
  - Motor startup method (automatic/semi-automatic) and direction of rotation
  - Insulation resistance of the motor

■ Operational test for protection devices

For details, refer to Chapter 1, Section 1.4.5 “Automatic Control and Protection for the Compressor” of this manual.

- Reduced oil pressure protection device (OP)
- High pressure protection device (HP)
- Low pressure control device (LP) and unloader solenoid valve

■ Airtightness test and refrigerant leak test

The customer is requested to conduct the airtightness test and refrigerant leak test for the system.

⚠ DANGER

- **Never use oxygen or flammable gas for the airtightness test. Otherwise, there is a risk of explosion.**

CAUTION

- **If carbon dioxide is used for the airtightness test of a compressor that uses ammonia as a refrigerant, it may result in the deposition of ammonium carbonate, and it can cause a failure.**

Chapter 4 Operation of Compressor and System

4.1 Lubricant (Refrigerant Oil)

The lubricant (refrigerant oil) is used for the purpose of lubricating the moving/sliding members of the compressor, preventing abnormal wear, and cooling each section. For this, the following properties are required for the oil:

- An appropriate viscosity is maintained within the operating temperature and pressure ranges.
- The liquidity is maintained even under extreme low temperature conditions (within the operating temperature range of the refrigerating system).
- It is chemically stable and will not corrode or change the quality of the components used (such as metals or rubbers).
- The wax component will not be separated even under low temperature conditions.
- Sludge and carbon are not easily generated even under high temperature conditions.
- Water is not contained.

4.1.1 Precautions for Selecting the Lubricant

- The type (brand) of the lubricant depends on the refrigerant to be used. For details, contact one of our sales offices or service centers.
- For NH_3 refrigerant, do not use polyolester (POE) or Poly alpha olefin (PAO).
- Mineral oils as specified in ISO-VG 46 – 68 are recommended.
  As the minimum requirement, the required viscosity shall be ensured for the oils supplied to sliding members. If any lubricant that can absorb a significant amount of refrigerant (inter-soluble oil) is used, the viscosity under the operating conditions may significantly be reduced from that specified in the product specification. Select a lubricant that can maintain the viscosity of 20 to 70 mm^2/s under normal operating conditions.
- Take into account the circulation of the lubricant in the entire system. After lubricating and cooling the various sections of the compressor, the lubricant will mostly return to the oil receiver of the crank case. However, some part of the lubricant will be discharged together with the refrigerant. While the oil discharged from the compressor will mostly be captured by the oil separator and returned to the compressor, some part will be sent to the condenser and evaporator. As such, the lubricant is required to maintain a sufficient liquidity and stability in the various types of components with varying temperature range.

4.1.2 Change of Lubricant Brand

- When the brand of the lubricant used is changed, mixing of the old and new oils can cause unexpected problems. Pay sufficient attention when you are to change the lubricant.
- If the manufacturers are different, contact both of them to check if there is no problem. Even if the manufacturer is the same, similar confirmation is required when the brand name of the lubricant is to be changed.
- There is no problem in changing the viscosity grade within the same brand. However, the viscosity grade after the change must be suitable to the operation.

4.1.3 Initial Charging Method

The initial charge and oil supply after an overhaul is made from the initial charge port, in order to fill the oil cooler, oil filter, and all the oil paths with the lubricant.

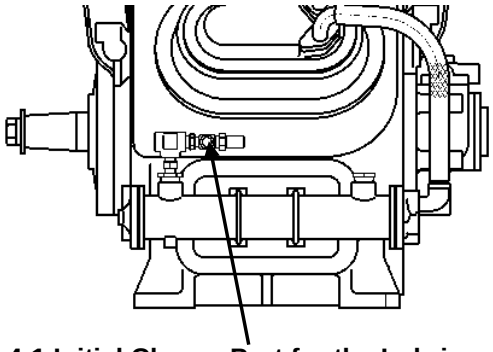

Figure 4-1 Initial Charge Port for the Lubricant

4.1.4 Replenishment of Lubricant

The oil level will gradually become lower as the operation is continued. Supply additional oil according to the following procedures while the oil level can still be checked at the oil sight glass. For the decision regarding the amount of oil, refer to Chapter 2, Section 2.1.5.3, Figure 2-11 “Management Criteria for the Amount of Lubricant” in this manual.

CAUTION
● **When filling lubricant, prevent air and moisture from entering the oil.** ● **The refrigerant oil to be replenished must be clean, with no contamination.** ● **To prevent bubbling inside the crank case, be sure to slowly and gradually supply the oil.** ● **The refrigerant oil must be stored under sealed conditions until it is used, for not to absorb moisture in the air.**

[How to supply oil while in operation (example)]

a) Attach the charge hose to the oil supply and discharge valve shown in Figure 4-2, and put the end of the hose into the can of new oil.
Then, slightly open the valve to purge the air inside the hose using the gas pressure in the compressor.

b) Gradually close the suction stop valve of the compressor to the point the suction pressure is only slightly vacuumed (approx. -0.026 MPa).

c) Gradually open the oil supply and discharge valve to constantly suck the oil.

d) After the required amount of oil has been supplied, securely close the oil supply and discharge valve.

e) Gradually open the suction stop valve to resume the steady operation.

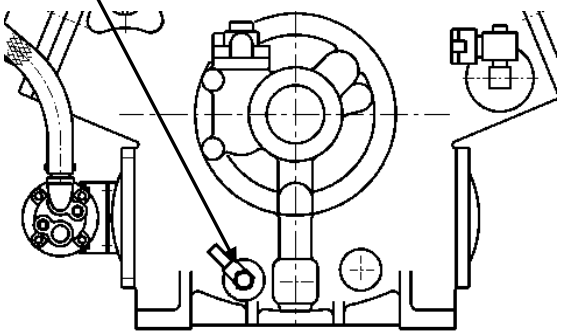

Fig. 4-2 Oil Supply and Discharge Valve

4.1.5 Oil Pressure Setting

Adjust the oil pressure control valve to make the oil pressure 0.20 to 0.25 MPa (0.4 MPa maximum) higher than the suction pressure.

4.2 Operation Sequence of the Unloader

The figure below shows the operation sequence of the unloader. The number in parentheses indicates the order of the unloading sequence. In the figures of 12WB and 12-4WB, the lines connecting between banks indicate that the connected banks are mechanically linked to operate together.

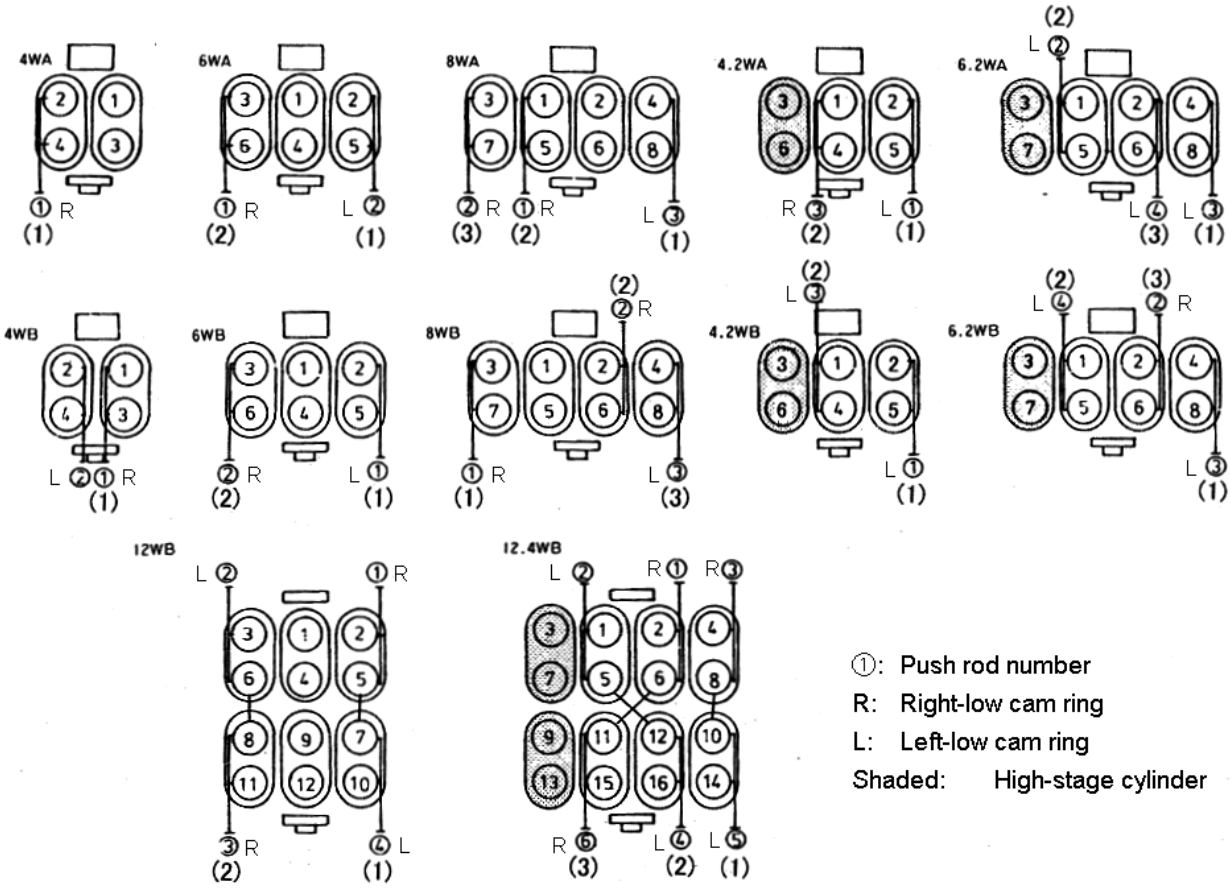

Figure 4-3 Unloader Operation Sequence

4.3 Initial Operation

4.3.1 Precautions for Initial Operation

DANGER

- **Check the open/close status of each valve before operation. In particular, operating the compressor with the high pressure side valves closed carries a risk that it may cause a rupture. Also, if the valves that connect to various protection devices are closed, the protection devices will not operate properly.**
- **Be sure to fully open the source valve of safety valves at all times, except when the safety valves are to be inspected.**
- **Before operation, the belt (coupling) guard must be attached. Operating the compressor without installing the belt (coupling) guard carries a risk that the operator could be caught in rotating parts to result in severe personal injury or death.**
- **Ensure that sufficient safety measures are in place when operating valves or conducting inspection with the compressor running. While the compressor is running, there are all sorts of risks including death, severe injury, minor injury, electric shock, burn, and so on.**

The refrigerant system installed must be operated for a long time maintaining the initial functions. For this, the initial operation has an important significance.
Within 24 hours after starting the initial operation, dust, scale, rust, sand, and other foreign matters in the pipe system tend to be collected in the compressor being carried by the flow of refrigerant gas. Tiny foreign matters not captured by the suction strainer or scale trap will be mixed in the oil and can cause a failure or abnormal wear.
While sucking of foreign matters into the compressor lasts for a long time during operation, the amount of such matters is the largest during this initial period of operation.
Check the existence of foreign matters by inspecting the suction strainer and scale trap, and also by checking the contamination of the lubricant.
As the condition of the oil in the crank case should indicate the state of contamination in the refrigerant system, you can determine that the inside of the system is clean if the oil in the crank case is kept clean and clear for a long period of time. If the oil is dark or impure dark brown, some foreign matters in the system are contaminating the oil. In such a case, be sure to change the oil as soon as possible to prevent foreign matters from entering the sliding/moving parts of the compressor.
In particular, check for any abnormal overheating or abnormal noise in the compressor.

[POINT]

- When cleaning the oil strainer and suction strainer/scale trap, it is necessary to properly process the refrigerant and to open the compressor. For the processing of the refrigerant and compressor disassembly/assembly procedures, refer to Chapter 5, “Maintenance and Inspection” of this manual.

4.3.2 Initial Operation Method

CAUTION
● **If the compressor to be used has been in storage for a long time, i.e., more than one year after the delivery, be sure to open each head cover, hand hole cover, and seal cover to check the inside. At that time, supply sufficient oil to the opened parts and change the O-ring of each mechanical seal.**

a) Before running the compressor, perform manual turn or inching (short run of 1 to 2 seconds) for a few times to check that the oil pressure gauge is operational. Also check at the sight glass that the oil level is slightly lowered at the same time.

b) Operate the compressor.

c) Perform the initial operation according to Table 4-1 “Guidelines for Oil Replacement and Filter Inspection”.

Table 4-1 Guidelines for Oil Replacement and Filter Inspection

Elapsed time	Replacement of oil and cleaning of oil strainer	Cleaning of suction strainer
After completion of refrigerant charging operation	must	recommended
After completion of commission	must	must
100 hours after starting operation	must	must
500 hours after starting operation	Oil analysis Cleaning of oil strainer	must
Note: If contamination of the lubricant or clogging of the filter is found, perform oil replacement or inspection/cleaning regardless of the above guideline.		

4.4 Operating Precautions

For the daily control items and their details, refer to Chapter 5, Section 5.1 of this manual. Other important operating precautions are given in the following paragraphs.

4.4.1 Start/Stop Limit

For normal operation of the compressor, the start/stop limits, stop duration, and other requirements are specified as follows.

The start/stop times and stop duration are specified in order to prevent possible burning of electric circuits and components or overheating and seizure of the compressor cylinders.

Table 4-2 Specifications for Start/Stop Times, Stop Duration, etc.

Item	Limit	
	Water cooled type	Air cooled type
Number of start/stop cycles	4 cycles per hour	2 cycles per hour
Minimum stop duration	15 minutes or more	30 minutes or more
Minimum operation time	15 minutes or more	
Number of unloader operations	5 times per hour or less	

4.4.2 Liquid Flow-Back Prevention

The “liquid flow-back” is a phenomenon when the refrigerant liquid reaches the compressor without being completely evaporated with the gas. The liquid flow-back phenomenon may cause insufficient lubrication of the compressor, generation of abnormal vibration and noise, and/or abnormal foaming of the lubricant (oil loss). To prevent liquid flow-back operation, properly adjust the expansion valve of each cooler.

4.5 Action to Take when the Compressor is Stopped for a Long Time

If the compressor is to be stopped for a long time, be sure to recover the refrigerant from the compressor, close the suction and discharge stop valves and the stop valve in the downstream of the oil filter of the oil supply line, and shut off the main power to the motor, heater power, and power to the control panel.

If the inoperative period lasts for a month or longer, perform the following services once a month:

- Measure the pressure of the system;
- Check for any leak of refrigerant from each section of the system; and
- Turn the compressor shaft (for at least 10 turns).

When the system is to be operated after being inoperative for one year or longer, check for any refrigerant leak and replace the oil.
In addition, open each head cover, hand hole cover, and seal cover to check the inside. At that time, supply sufficient oil to the opened parts and change the O-ring of each mechanical seal.
Measure the insulation resistance of the motor to confirm that it can run without problems.

Apply power to the oil heater at least one hour prior to starting the operation. Also, before starting to operate the system, check the temperature and pressure inside the package to make sure that the refrigerant is not condensed in the package.

Chapter 5 Maintenance and Inspection

5.1 Precautions for Maintenance and Inspection

- After completing the refrigerant recovery work and before working on the maintenance and inspection, be sure to shut off the main motor power, control power, and other power to each piece of equipment and valve. After they are shut off, be sure to make the switches inoperable by others. Also, be sure to attach notification tags to prohibit operation (lock-out/tag-out).
- When any manual stop valve has been closed, be sure to make the valve inoperable by others and put a notification tag to prohibit operation (tag-out).
- Disassembly, inspection, and handling of the compressor shall be performed only after the disassembly and assembly procedures have been sufficiently understood. This manual is not intended to provide complete disassembly and assembly procedures for the compressor. Instead, it describes only the important points regarding the maintenance service for the compressor.
- If complete disassembly and assembly procedures for the compressor are required, please contact your nearest branch or sales office of our company.
- Be sure to use only MYCOM genuine parts for replacement. Using anything other than genuine parts may result in an unexpected problem.
- Do not convert or modify the compressor or its components without prior permission from MAYEKAWA. Otherwise, it can lead to a damage of the compressor or failure to maintain the function of the compressor.
- When disassembling/assembling the compressor, use the correct tools specified.
- When the compressor is to be overhauled, check that the internal pressure of the refrigerator is at the atmospheric pressure before starting the work.
- Make sure that the temperature of the high temperature sections such as head covers and discharge lines is at normal ambient temperature, before working on them.
- Whenever handling a heavy object, take sufficient care and use effective support tools such as stud bolts (safety bolts).
- When handling a heavy object, use a crane or other lifting device. Otherwise, the work must be done by at least two people.
- When two or more people are to work together, be sure to mutually check the respective roles in the work and always keep track of the other workers' actions.
- Each power must be turned on and off carefully by a qualified personnel, for not to cause electric shock accidents.
- If qualification is required in working on other electrical equipment or structure, be sure to have the work carried out by a qualified person.

5.2 Maintenance and Inspection List

5.2.1 Daily Management

For the purpose of daily maintenance, check the items listed in Table 5-1 “Daily Inspection Items” and record the results.
By regularly recording the daily operational data in an operation log, it should be able to detect any significant change in the system. This practice is particularly effective in preventing possible failures of the compressor.
It is particularly important to keep track of the records that indicate the relationship between the temperature and pressure, as it is closely related to the evaporation and condensation of the refrigerant, in quickly finding any abnormal condition of the compressor or the system.
Keeping an operation log can facilitate the efforts to properly track down the cause of failure or accident that may occur in the compressor or the system, making it easier to quickly and accurately deal with the situation.
Besides the ones in Table 5-1, there are other check points to be regularly observed, recorded, and managed in other components of the refrigeration system as well as in the load conditions. For these points, please refer to the instruction manual of each component unit of the refrigeration system.

Table 5-1 Daily Inspection Items

Inspection item			Inspection details	Remarks
Compressor	Hours of operation	h	Total hours of operation	• Used to determine the interval of regular maintenance and inspection
	Suction pressure	MPa	Difference from the specified pressure for the specified evaporation temperature	• Cleanliness of the cooling pipe surface • Temperature and flow of the items cooled
	Discharge pressure	MPa	Difference from the condensation pressure for the specified cooling water temperature	• Cleanliness of the condenser cooling pipe • Mixing of non-condensing gas • Amount and temperature of the cooling water
	Oil supply pressure	MPa	Difference from the discharge pressure	• Whether the differential pressure is decreasing or not • Liquid flow-back operation • Wear of compressor parts
	Suction temperature	°C	Whether the upper/lower limit temperatures are not exceeded	• Temperature and flow of the items cooled
	Discharge temperature	°C	Whether it is within the upper limit temperature	• Mixing of non-condensing gas • Supply oil temperature, insufficient amount of oil • Failure of the compressor
	Supply oil temperature	°C	Whether upper/lower limit temperatures are not exceeded	• Cleanliness of the cooling pipe of the oil cooler
	Oil level in the crank case	–	Whether upper/lower limits are not exceeded	• Note that the apparent oil level rises if the refrigerant is highly absorbed in the oil.
	Leakage from shaft seal	mL/h	Amount of leak per hour: - Normal leak with WA-type: ≤3 - Normal leak with WB-type: ≤6	Guideline for inspection: • WA-type overhaul: ≥9 • WB-type overhaul: ≥18
	Noise and vibration	–	Abnormal noise or vibration	• Failure of the compressor/motor • Problems with belts/coupling
	Cooling water hose	–	Water leak, disengagement	

Inspection item			Inspection details	Remarks
Others	Motor current	A	Whether it is increased from the time of the commission	• Failure of the compressor
	Temperature inside machine room	°C	Whether it is within the acceptable temperature range for the motor	• Overheating and failure of the motor
	Liquid level of the liquid receiver	—	Liquid level height	• Add refrigerant
	Refrigerant leak check	—	Any refrigerant leak	• In the machine room and in the facility on the load side

■ Unless otherwise noted, the pressure unit “MPa” represents the gauge pressure in this manual.

5.2.2 Periodic Inspection

Conduct inspection for the following items according to the specified schedule.
In addition, regarding other related items such as any safety devices, gas leak detectors, or other utility (gas/electricity) protection devices that constitute the cooling system together with the compressor, even if they are not directly connected to the compressor, any regulatory requirements that require inspection and recording of the results must be observed according to the instructions provided.

Table 5-2 Periodic Inspection Items

Item	Inspection interval	Remarks
Tension and degradation of belts	Monthly inspection	
Looseness of V-pulley set bolt	Monthly inspection	If there is the looseness, tighten it up
Suction strainer Scale trap Oil strainer (External oil filter)	Inspection and cleaning at 100 and 500 hours after starting the initial operation	
	After that, inspection and cleaning shall be performed at 3000 hours interval.	
Pressure gauge/pressure sensor	Yearly inspection	
Thermometer/temperature sensor	Yearly inspection	
Protection devices and safety valves	Yearly inspection	
Lubricant	Replacement after 100 hours of operation since the initial operation	
	Replacement after 500 hours of operation since the initial operation	When the analysis results do not meet the management criteria provided in "5.3 Management of Lubricant" of this manual, replace oil.
	Oil analysis every six months	
Motor greasing	Follow the instruction manual for the motor	
Cooling water system	Yearly inspection	To be cleaned if not clean enough
Shaft seal	Inspection every year or every 6000 hours of operation*	To be replaced if any abnormality is found
Direct coupling	Inspection every year or every 6000 hours of operation*	To be replaced if any abnormality is found

■ The inspection shall be performed according to the calendar time or operating hours, whichever comes first.

5.2.3 Compressor Overhaul

5.2.3.1 Guideline for the Overhaul Interval

CAUTION

- **The required interval of maintenance and inspection services will vary depending on the compressor model, refrigerant, rotating speed, usage condition, state of system, and type of oil. The cost of parts replacement will be charged to the customer even if the part failure occurs before reaching the overhaul time listed in this section.**
- **Replacement of consumables used in the W-series compressor shall normally be made at the time of overhaul.**

The recommended overhaul interval is shown in the table below as a guideline.

Here, it is assumed that:

(1) The operating condition is within the specified operation range, and

(2) The number of start/stop cycles is within the specified limit.

Table 5-3 Guideline for the Overhaul Interval

Type of inspection	Recommended interval
First overhaul	6000 hours of operation or one calendar year, whichever comes first
Second overhaul	12000 hours of operation or two calendar years, whichever comes first

5.2.3.2 First Overhaul Period

Remove each cover plate, head cover, and hand hole cover and take out the pistons and connecting rods. If no abnormality is found, it is unnecessary to remove the crank shaft or the bearing housing.

Table 5-4 First Overhaul Items

No.	Inspection point	Action
2	Crank shaft pins	Inspection and replacement if any abnormality is found
29	Thrust roller bearing (BB type uses thrust ball bearing)	Inspection and replacement if any abnormality is found
32	Shaft seal	Inspection and replacement if any abnormality is found
61	Cylinder sleeve	Inspection and replacement if any abnormality is found
71,72	Suction valve and spring	Replacement
82	Connecting rod bush	Inspection and replacement if any abnormality is found
83	Needle bearing for high-stage connecting rods	Replacement
84	Connecting rod bearing halves	Replacement
85	Piston	Inspection and replacement if any abnormality is found
86	Piston pin	Inspection and replacement if any abnormality is found
88	Piston ring	Replacement
110,116	Discharge valve and spring	Replacement
119	Oil strainer	Cleaning
154	Suction strainer and scale trap	Cleaning
–	Water cooling jacket cover and water side of the oil cooler	Cleaning
–	Gasket	Replacement
–	O-ring	Replacement

No.	Inspection point	Action
–	Lubricant	Replacement
	Motor grease	Refer to the instruction manual of the motor.

5.2.3.3 Second Overhaul Period

The second overhaul items are listed in the table below. Remove the crank shaft and main bearing head.

Table 5-5 Second Overhaul Items

No.	Inspection point	Action
2	Crank shaft	Inspection and replacement if any abnormality is found
2	Crank shaft pins	Inspection and replacement if any abnormality is found
12	Main bearing	Inspection and replacement if any abnormality is found
29	Thrust bearing	Inspection and replacement if any abnormality is found
29	Thrust ball bearing (BB type uses thrust roller bearing)	Replacement
32	Shaft seal	Replacement
61	Cylinder sleeve	Inspection and replacement if any abnormality is found
71,72	Suction valve and spring	Replacement
82	Connecting rod bush	Replacement
83	Needle bearing for high-stage connecting rods	Replacement
84	Connecting rod bearing halves	Replacement
85	Piston	Inspection and replacement if any abnormality is found
86	Piston pin	Replacement
88	Piston ring	Replacement
110,116	Discharge valve and spring	Replacement
119	Oil strainer	Cleaning
154	Suction strainer and scale trap	Cleaning
–	Water cooling jacket cover and water side of the oil cooler	Cleaning
–	Gasket	Replacement
–	O-ring	Replacement
–	Lubricant	Replacement

5.2.3.4 Third Overhaul Period

In addition to the first and second overhaul items, replace the valve plate [No.73] and discharge valve sheet [No.111] at the interval of 24,000 hours of operation or 4 years, whichever comes first, as a guideline.

5.3 Lubricant Management

5.3.1 Management Criteria

Lubricants are classified into the following categories and different management criteria are applied to each category.

(1) Mineral oil: Naphthenic oil, Synthetic oil: Alkyl benzene (AB), Polyalphaolefine (PAO)

(2) Inter-soluble synthetic oils for NH_3 refrigerant: Polyalkylene Glycols (PAG)

- **Oil sampling and analysis is recommended every six months.**
- **If the following management criteria are not satisfied, replace the oil.**
  * Note that the water content of PAG shall be excluded from the above oil replacement criteria. Refer to the note *2 in the table below.

The analysis items and the criteria are shown in the following tables.

Note that these criteria may be changed without notice according to actual results.

Table 5-6 Mineral Oil and Synthetic Oils (AB), (PAO)

Item	Criteria
Color phase	Max. L6.0 according to ASTM D1500
Total acid value	0.3 mg KOH/g or less
Kinetic viscosity	Within ±15% from that of fresh oil
Water content	100 massppm or less
Degree of contamination	Degree of contamination measured by mass method (millipore value) shall be 25 mg/100 ml or less.

Table 5-6 Inter-Soluble Synthetic Oils (PAG)*1

Item	Criteria
Color phase	Max. L4.0 according to ASTM D1500
Total acid value	0.1 mg KOH/g or less
Kinetic viscosity	Within ±15% from that of fresh oil
Water content	2000 massppm or less *2
Degree of contamination	Degree of contamination measured by mass method (millipore value) shall be 25 mg/100 ml or less.

*1 When NH_3 refrigerant is used with PAG, the inside of the equipment can be easily rusted due to water absorption. Furthermore, as PAG has a higher cleaning effect than conventional mineral oils, the rust developed in the equipment can be easily carried to the compressor, to make the degree of contamination higher during the initial phase of operation. As such, it is recommended to replace the oil with new oil, after 2,000 to 3,000 hours of operation. To prevent possible absorption of water during oil charge, rainy days should be avoided. Complete charging within 15 minutes after the pail can is opened.

*2 This value is only for reference purposes, due to possible water absorption during the sampling, as the oil has high water absorption characteristic. Also, in the case of NH_3 refrigerant, NH_3 may be detected as water. If this limit is repeatedly exceeded in two or more samplings, it should be judged that it does not satisfy the management criteria.

5.3.2 Lubricant Replacement Interval

5.3.2.1 After Starting the Initial Operation

As the oil can easily be contaminated and degraded relatively quickly during the initial operation due to scales and deposits remaining in piping and vessels, replace the oil after 100 hours of operation.

Furthermore, sample and analyze the lubricant after 500 hours of operation. If it is found as a result of the analysis that the management criteria given in Table 5-6 or Table 5-7 are not satisfied, the oil must be replaced.

5.3.2.2 During Normal Operation

Lubricant degrades gradually as the system is operated over time. The rate of degradation depends on the operating condition, type of oil, and amount of foreign matters and moisture contained in the oil.

The lubricant must be sampled and analyzed every six months. If it is found as a result of the analysis that the management criteria given in Table 5-6 or Table 5-7 are not satisfied, the oil must be replaced.

If the oil filters are frequently clogged or the oil color quickly becomes darker and unclear, replace the oil after removing the cause of the problem.

In addition, replace the oil every time the compressor is overhauled.

5.4 Preparation for Overhaul

5.4.1 Replacement Parts

Prepare the required MYCOM genuine parts according to Chapter 7, Table 7-1 “Parts Configuration Table” in this manual.

All the O-rings and gaskets of the parts disassembled during the overhaul work must be replaced by new ones as they can be easily damaged in the disassembly process.

When ordering parts, be sure to inform the (a) model name, (b) serial number, (c) part name, (d) part number (code), and (e) quantity required to one of our sales offices or service centers.

Especially when the (b) serial number of the compressor is not identified, it will be difficult to decide the required parts because we can not specify the design and manufacturing specifications.

5.4.2 Disassembly Tools and Workplace

Before proceeding with the disassembly work, prepare necessary disassembly tools for the WA or WB type compressor by referring to Chapter 7, Section 7.8 “Disassembly Tools” in this manual.

It is also recommended to prepare general hand tools, green silicon carbide grinding stone, emery paper(#80-#100), emery paper(over #800), parts cleaning oil, lubrication oil, a lubricator, an oil can for oil sump, waste cloth and so on.

In the disassembly/inspection workplace, temporary storage places to put the tools, disassembled parts, and replacement parts, workplace for the disassembly work, safety passages, and necessary off-limit signs shall be provided.

5.4.3 Refrigerant Gas Recovery

Before the disassembly work, the refrigerant contained in the product must be recovered for not to discharge it into the air.

There are a few methods of recovering the refrigerant. For example, one method is to operate the refrigerator, close the supply source valve, turn the gas into liquid, and recover the liquid at the receiver. Another method is to use a refrigerant recovery machine to recover the liquid. As such, choose the means that best meets your purpose.

Prepare a working flow sheet of the system beforehand. Prior to the recovery work, check the valves to be controlled during the recovery work by comparing them with the ones in the flow sheet, and clearly note the valves to be operated, other connected devices, and tubes on the flow sheet.

Two flow sheets must be prepared, i.e., one at the foreman and the other for posting in the workplace.

In addition, prepare a work procedure document for the refrigerant recovery work to reflect the actual conditions of the workplace, and sufficiently share the work details among all the coworkers through checking and confirmation before actually starting the work.

WARNING

- **Before the work, be sure to check and communicate the work details and procedures among all coworkers, and carry out hazard prediction activities based on the information shared. Neglecting to do this will increase the risk of on-the-job accidents and injuries to a considerable level.**
- **All the valves that have been opened or closed during the work must be prevented from accidental operation through proper lock-out and tag-out procedures.**

If the lubricant (oil) used is mutually soluble to the refrigerant, a large amount of refrigerant should be contained in the oil. Accordingly, after the refrigerant has been recovered once, the refrigerant contained in the oil will be evaporated to increase the pressure inside the crank case. As such, be sure to recover the refrigerant repeatedly for a few times, until the pressure becomes low and no more increased.
After completing the recovery work, shut down the related drive power and control power, and securely carry out the lock-out and tag-out procedures.

5.4.4 Discharging the Lubricant and Cooling Water

After completing the refrigerant recovery work, fill the crank case with air to bring down the internal pressure to the atmospheric pressure, and then open the oil supply and discharge valve to discharge the oil. Also, discharge the cooling water from the water drain plug or water drain valve.

5.4.5 Removal of V-belt or Coupling

a) Disengage the V-belt or coupling to separate this product from the motor.

b) Remove the pulley or the coupling hub on the compressor by using a pulley extractor. As the shaft is tapered, it is easy to remove the unit by slightly loosening it.

c) If a flange type motor or water-cooled semi-closed motor is used, refer to the instruction manual of the package unit or motor. If the overhaul is only for the compressor, keep the motor as it is.

WARNING

- **The V-pulley (or the coupling hub) is a heavy piece of equipment. The removal work must be performed by a number of people appropriate to carry the weight.**

5.5 Disassembly

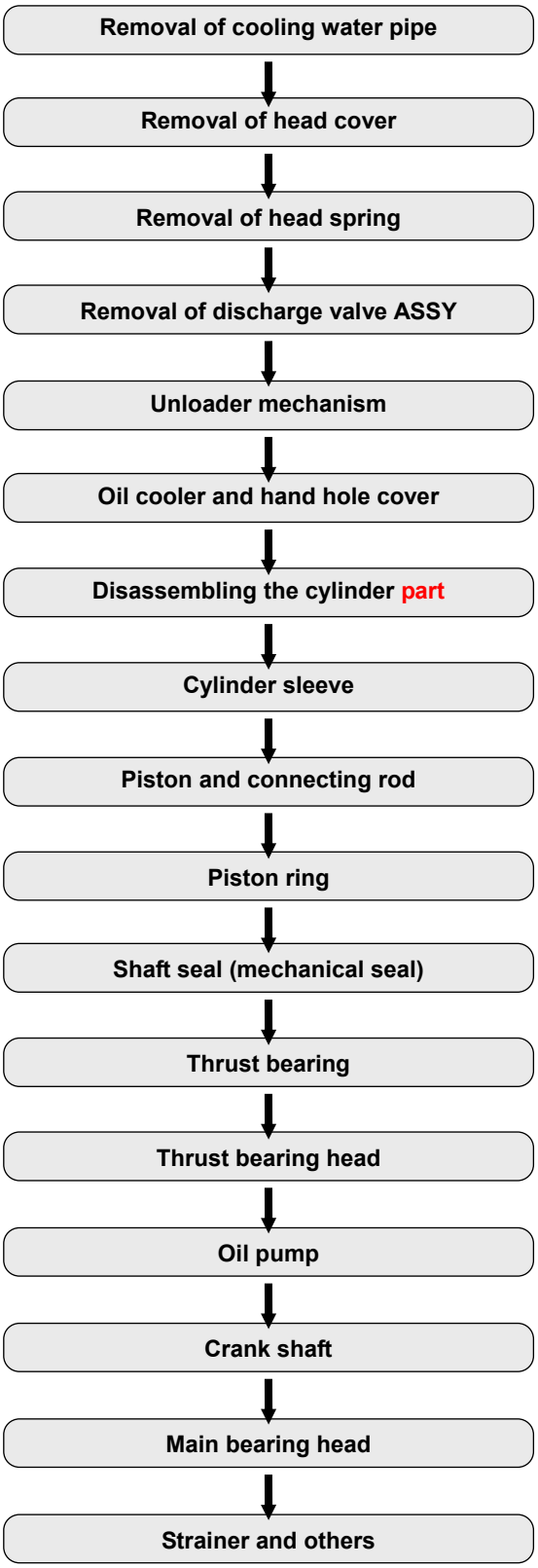

* ASSY: assembly = assembled unit

Figure 5-1 Work Flow of Compressor Disassembly

5.5.1 Removal of Cooling Water Pipe

a) Figure 5-2 shows the pipe lines for the cooling water.

b) Each jacket of the compressor is connected with a braided high pressure hose. As the braided high pressure hose is tightened by a hose band onto the hose nipple, loosen the hose band to remove the hose.
If the hose nipple is connected by a flange, as shown in the picture to the right, it should be easier to remove the flange than to loosen the hose band.
Note that if the braided high pressure hose is a black one, it can not be reused once removed.

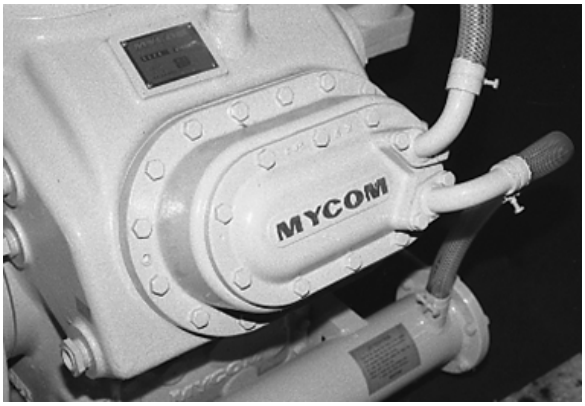

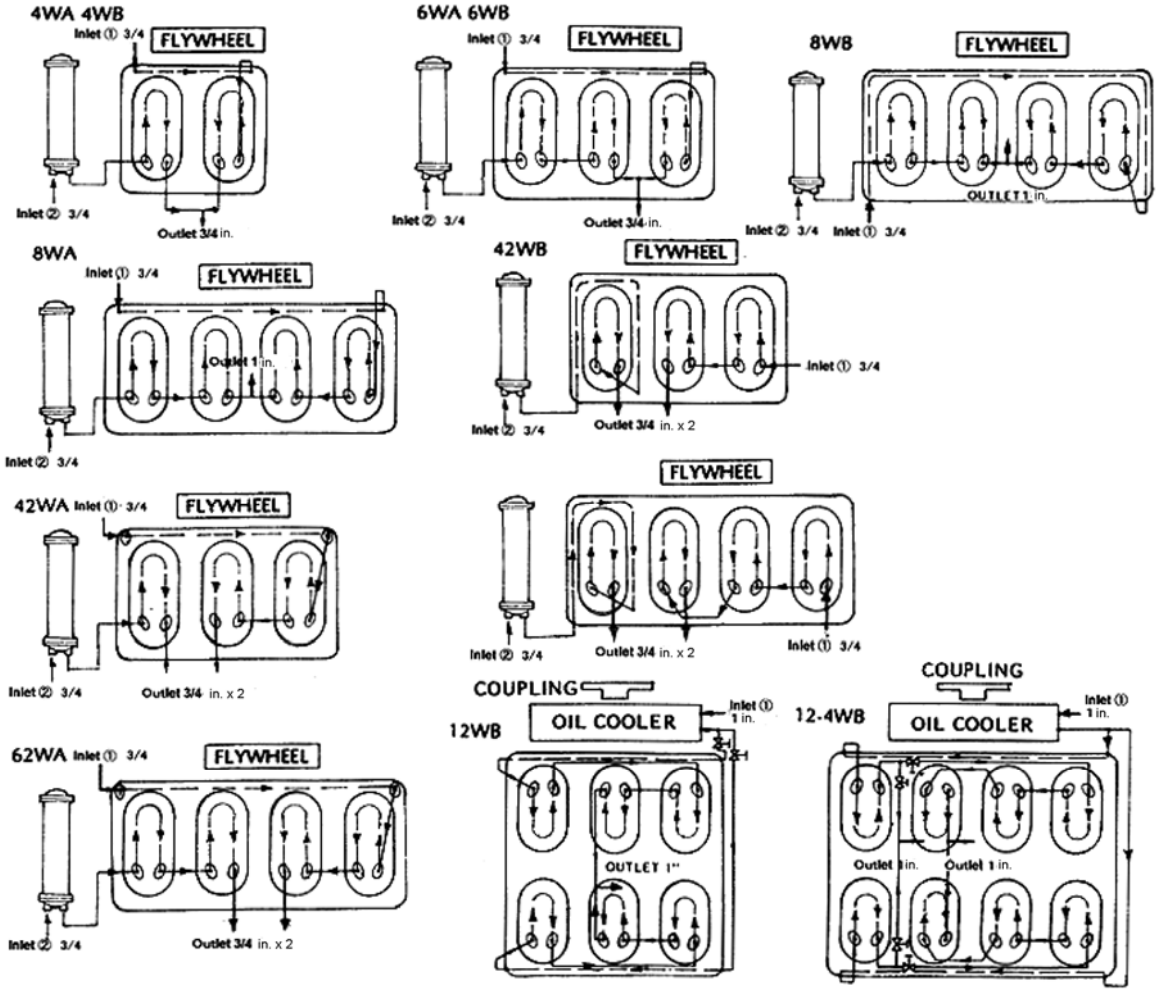

Figure 5-2 Pipe Lines for the Cooling Water (WA/WB Type Compressor)

5.5.2 Removal of Head Cover

(Weight of water-cooled head cover - WA: 15 kg, WB: 24 kg)

Either water-cooled or air-cooled head cover is used for the compressor. In the case of water-cooled head cover, if it is desired to clean the water side of the jacket, the jacket part can be removed from the head cover. When removing the jacket, be sure to start from the upper covers.

CAUTION

- **Dropping the head cover can cause injury or damage to the compressor. Be sure to use stud bolts (safety retention bolts) during the work.**

a) Loosen and remove all fastening bolts except for two bolts placed in the opposite positions. Loosen the remaining two bolts slightly. If the gasket for the head cover is not closely adhered, the head cover will be easily lifted by the spring force. Alternately loosen the two bolts until the spring force is fully released.

b) Remove the two bolts by alternately loosening them.

c) Lift up the head cover along the stud bolt to remove it.

WARNING

- **If the head cover does not come off, the gasket is closely adhered. In such a case, use a disassembly tool with the forcing bolt of it screwed into the service screw hole on the left and right side of the head cover flange to detach the gasket. The head cover may spring out suddenly at any time, to cause injury to the worker.**

5.5.3 Removal of Head Spring

As shown in the picture to the right, the head springs are placed between the back side of the head cover and the discharge cage assembly.
The top of each cage has a round step onto which the inner diameter of the coil spring fits for correct positioning.
You can easily remove the spring by lifting it up.

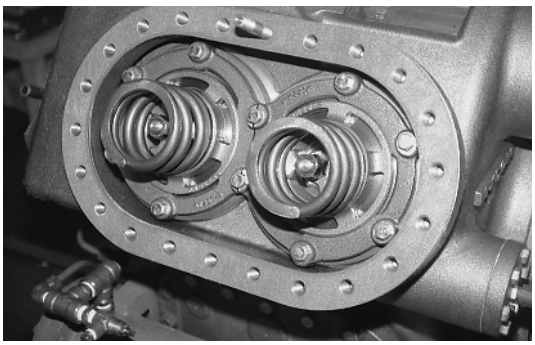

CAUTION

- **In case of the operation with the high discharge temperature of the refrigerant such as ammonia, the springs may be closely adhered to the discharge valve cage due to accumulation of carbides formed. In such a case, you should be careful as the discharge valve assembly may come off with the head spring first and then drop.**

5.5.4 Removal of Discharge Valve Assembly

(Weight of discharge valve assembly - WA: 1.2 kg, WB: 3.0 kg)

The cage is simply being inserted (fitted) to the cage guide, i.e., the internal diameter of the cage guide is slightly larger than the outer diameter of the cage. By pulling the nut of the cage, you can remove the cage out of the cage guide.
However, if the cage is not pulled straight up, it may get stuck along the way.
In such a case, return it to the original position once and then pull it straight up again.

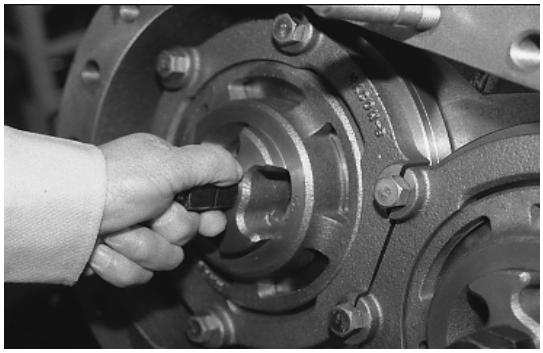

CAUTION

- **Be careful not to drop any foreign matter into the cylinder after the cage has been removed. Any foreign matter dropped into the cylinder can scratch the inner surface of the cylinder when the piston is moved up and down during the cylinder disassembly process to be described later.**

■ Disassembly of the Discharge Valve Assembly

Disassembly should be avoided unless it is necessary for parts replacement or repair work. When replacing the assembly, check the marking on the cage to identify the correct type to be ordered, as different valve lifts are used depending on the operational condition.
The special tool shown in the picture below must be used when disassembling the assembly. Remove the nut and pull out the bolt to remove all the parts.

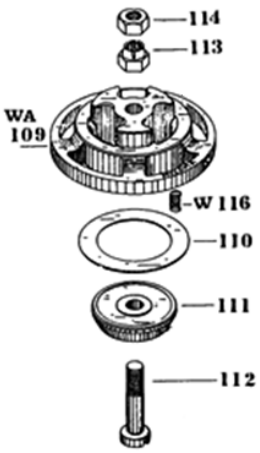

114: Second nut
113: First nut
109: Discharge valve cage
116: Discharge valve spring
110: Discharge valve
111: Discharge valve seat
112: Discharge valve fastening bolt

Figure 5-3 Discharge Valve Assembly

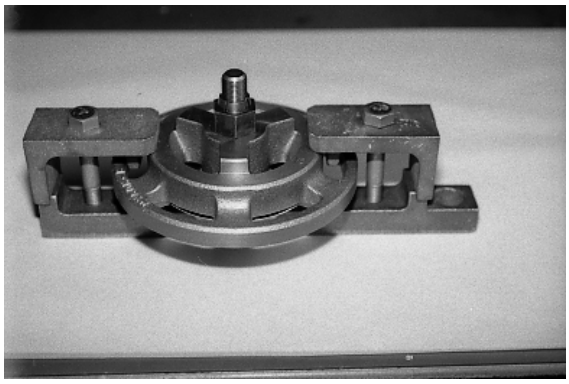

5.5.5 Unloader Mechanism

It is unnecessary to disassemble the unloader unless there is a problem with the unloader mechanism. When disassembling the unloader part, remove the oil pipe first.

a) Remove the unloader piston cover fastening bolts to remove the unloader piston cover.

b) Pull out the unloader piston, unloader push rod, and unloader device spring.

c) The unloader push rods have different lengths depending on the cylinder position. Therefore, it is necessary to record the combination of the unloader push rod number and the corresponding cylinder number when the rod is removed. By this, possible assembly error can be prevented.

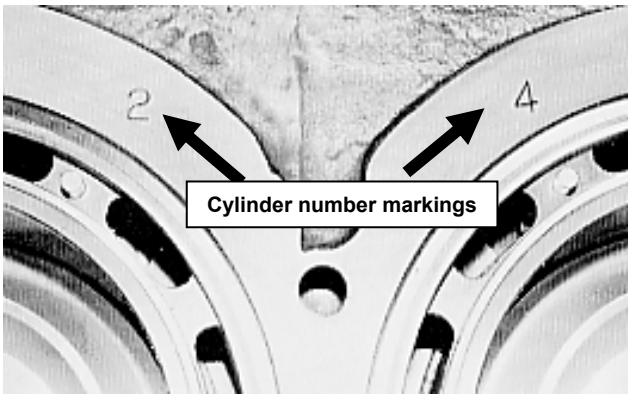

Marking (number) on the crank case

Unloader (device spring and push rod)

[POINT]

- The components of the unloader mechanism are divided into the ones to be attached to the crank case and the ones to be attached to the cylinder sleeve.

Unloader components (to be attached to the crank case)

Table 5-8 Unloader Components (to be attached to the crank case)

No.	Part Name
135	Unloader push rod
142	Unloader device spring
143	Unloader push rod washer
144	Unloader push rod fastening bolt
145	Unloader piston

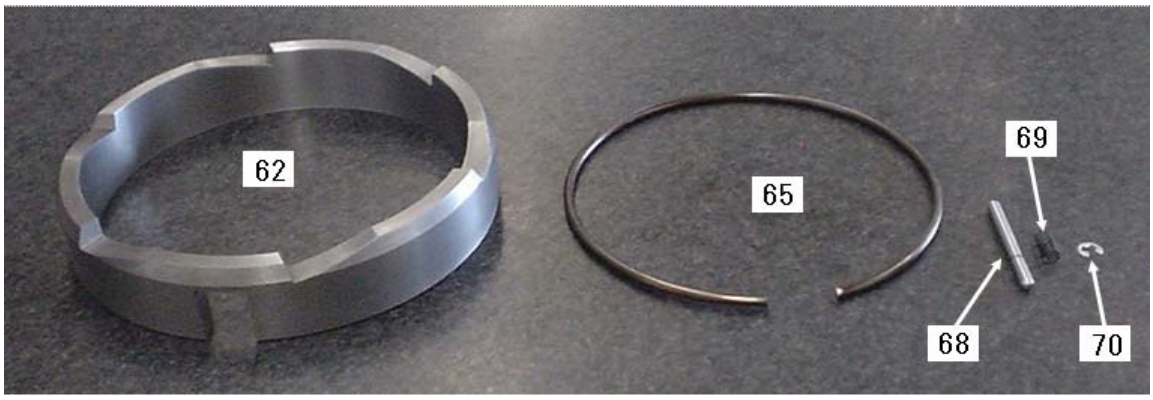

Unloader components (to be attached to the cylinder sleeve)

Table 5-9 Unloader Components (to be attached to the cylinder sleeve)

No.	Part Name
62	Unloader cam ring (left-down slope) * No. 63 for right-down slope
65	Retaining ring
68	Lift pin
69	Lift pin spring
70	Lift pin stop ring (split pin)

5.5.6 Oil Cooler and Hand Hole Cover

(Weight of oil cooler for WA-type - Coolant cooling: 26 kg, Water cooling: 16 kg)
(Weight of oil cooler for WB-type - Coolant cooling: 37 kg, Water cooling: 32 kg)
(Weight of hand hole cover - WA: 8.5kg, WB: 21 kg)

It is necessary to first open the hand hole cover before disassembling the cylinder part and other parts. If the oil cooler is attached to the hand hole cover, it must be removed before removing the hand hole cover.

If the oil cooler is mounted on the pedestal (unit frame) and it will not interfere with the compressor disassembly work, it is unnecessary to remove it.

First, loosen the nuts of the joints and other hardware to remove the oil pipes connected to the oil cooler.

a) There are two types of mounting hardware for mounting the oil cooler to the compressor. If bolts are used, after sufficiently loosening the two or four bolts on both sides of the oil cooler, lift up the oil cooler and pull it towards you to avoid the heads of the bolts, and you can remove it.

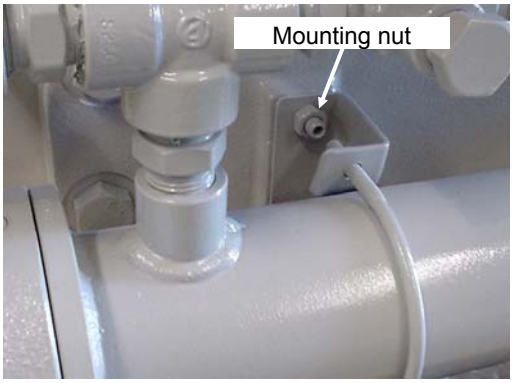

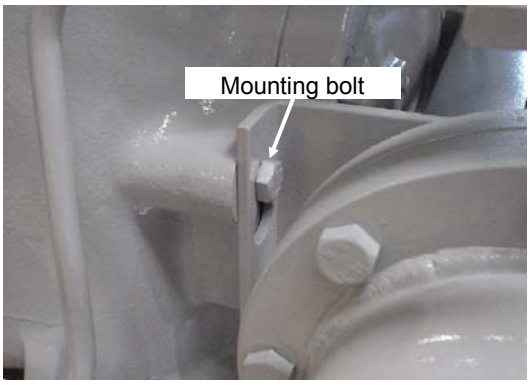

b) If any pipe lines are connected to the hand hole cover, such as the automatic oil return pipe from the oil separator and a pressure equalizer pipe from the oil tank, remove them.
In addition, when an oil heater is attached,, remove the electrical wiring. While it is unnecessary to remove the oil heater from the hand hole cover, it must be handled with care for not to spill water or oil on it or hit it with other parts.
c) Remove the bolt at the top center of the hand hole cover and replace it with a stud (safety retention) bolt.
d) Loosen and remove all the remaining bolts. If the gasket is adhered to the cover, use a disassembly tool with the forcing bolt of it screwed into the serive screw hole on the flange of the hand hole cover to detach the gasket.
e) Pull the hand hole cover towards you along the stud bolt to remove it. If an oil heater is installed, be careful not to hit the inside part of it with the crank case or other part.

5.5.7 Disassembling the Cylinder Part

(Weight of the cylinder assembly - WA: 6.5 kg/set, WB: 14.5 kg/set)

Because the width of the large end of the connecting rod is wider than the bore of the cylinder, the connecting rod can not pass through the cylinder. Accordingly, when the cylinder part is to be disassembled, the assembly of the cylinder sleeve, piston, and connecting rod must be removed together from the crank case, as an assembled set.

a) First, after the cylinder (piston) assembly to be removed is determined, rotate the crank shaft to set the piston at the bottom dead center (the lowest position).
b) Loosen the bolt [75] fastening the discharge cage guide [74] and pull out to remove it.
c) Put your fingers into the center hole of the valve plate, and remove the valve plate and discharge valve cage guide together. The suction valve [71] will remain on the seat of the cylinder sleeve.
d) Remove the suction valve.
When the valve plate [73] is removed, the cylinder will be freed from the crank case.

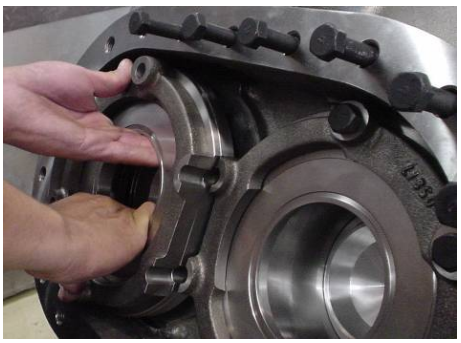

Removal of valve plate

f) By accessing from the hand hole, remove the nuts of the connecting rod fastening bolts [78] of the piston assembly to be removed.
Remove the second nut [81] first, and then the first nut [80]. Pulling down the connecting rod cap will disengage the lower half of the bearing halves (L) [84].

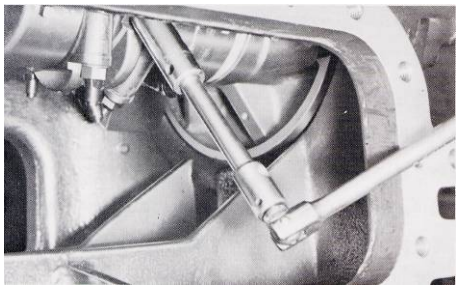

g) To prevent the connecting rod fastening bolts from hitting the crank shaft while the cylinder piston assembly is pulled out, remove the connecting rod fastening bolts beforehand.

h) Screw the eye bolt of the disassembly tool into the threaded hole on top of the piston and pull out the cylinder assembly from the crank case. If the cylinder sleeve is tightly engaged with the crank case, use some wire on the rib part of the cylinder sleeve collar to pull out together with the piston.
In particular, as the high-stage side of a single two stage compressor is installed with an O-ring, a considerable force is required in pulling out the cylinder sleeve.

[POINT]

- When pulling out the cylinder piston assembly, pulling only the piston will cause the piston ring to come out from the top of the cylinder. As it will make it difficult to pull out the piston and connecting rod assembly from the cylinder sleeve later, be careful not to pull only the piston.

CAUTION

- **When pulling out the cylinder assembly of a slant cylinder, the large end of the connecting rod may be caught by the partition wall in the crank case. To prevent the connecting rod large end from being caught, use your hand to support it from the hand hole while pulling out the cylinder assembly.**

i) During the disassembly process, put the cylinder, piston, and connecting rod assemblies in the order of the cylinder number. The connecting rod caps already disassembled should also be placed together with the corresponding connecting rods.

5.5.8 Cylinder Sleeve

This work shall be performed with the unit placed on a clean wood board, rubber sheet, or plastic sheet.

a) Place the cylinder sleeve upside down (with the suction valve side facing down) on a clean surface carefully not to damage the unit. At this point, it is advised to rotate the cam ring to let the lift pins out, to prevent the seat surface from being damaged by touching the workbench surface.
b) As shown in the picture to the right, pull the connecting rod out of the cylinder sleeve while pushing down the cylinder sleeve.

[POINT]

- Normally, it is unnecessary to remove the cam ring from the cylinder sleeve. There are two types of cam rings differentiated by the slope of the triangular cut-out portion, i.e., right-down or left down. As this difference is due to the mounting position onto the crank case, which determines the direction of operation, be careful not to make mistakes when reassembling cylinder sleeve to the crank case.

5.5.9 Piston and Connecting Rod

a) Place the piston upside down on the work surface.
b) Remove the piston pin lock spring using a proper tool such as a pair of pliers.
c) Remove the piston pin by pushing it from one side. If the piston pin is tightly engaged with the piston, lightly tap the pin with a piece of wood to remove it.
d) By removing the piston pin, the piston is separated from the connecting rod. Do not remove the bearing halves at the large end from the connecting rod unless they are to be replaced.

[POINT]

- Each connecting rod is marked with a three-digit number to indicate the combination between the main body and the rod cap. Also, the cylinder number is marked on the opposite side.
  Once removed, be sure to put them together as a set.

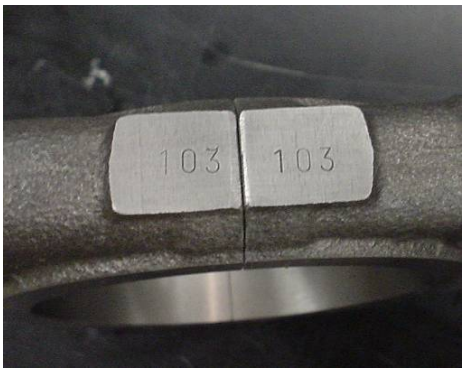

Combination number

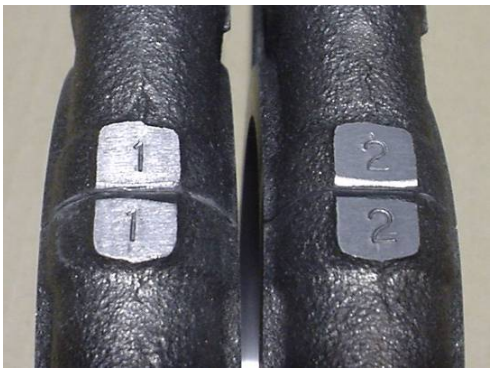

Cylinder number

5.5.10 Piston Ring

Preferably, the piston ring should not be removed unless it is to be replaced. When removing the piston ring, be sure not to excessively widen the ring end gap.

To remove the piston ring, use a special tool as shown in the picture to the right. If no such tool is available, use a vinyl wire or lock tie to make a loop to pull both ends apart to widen the ring as shown.

Piston ring removal tool

CAUTION

- **Because if the piston ring is excessively widened during the removal process, it may become strained and distorted to cause oil loss, be sure to follow the above work procedures (see the figure to the right).**

5.5.11 Shaft Seal Part

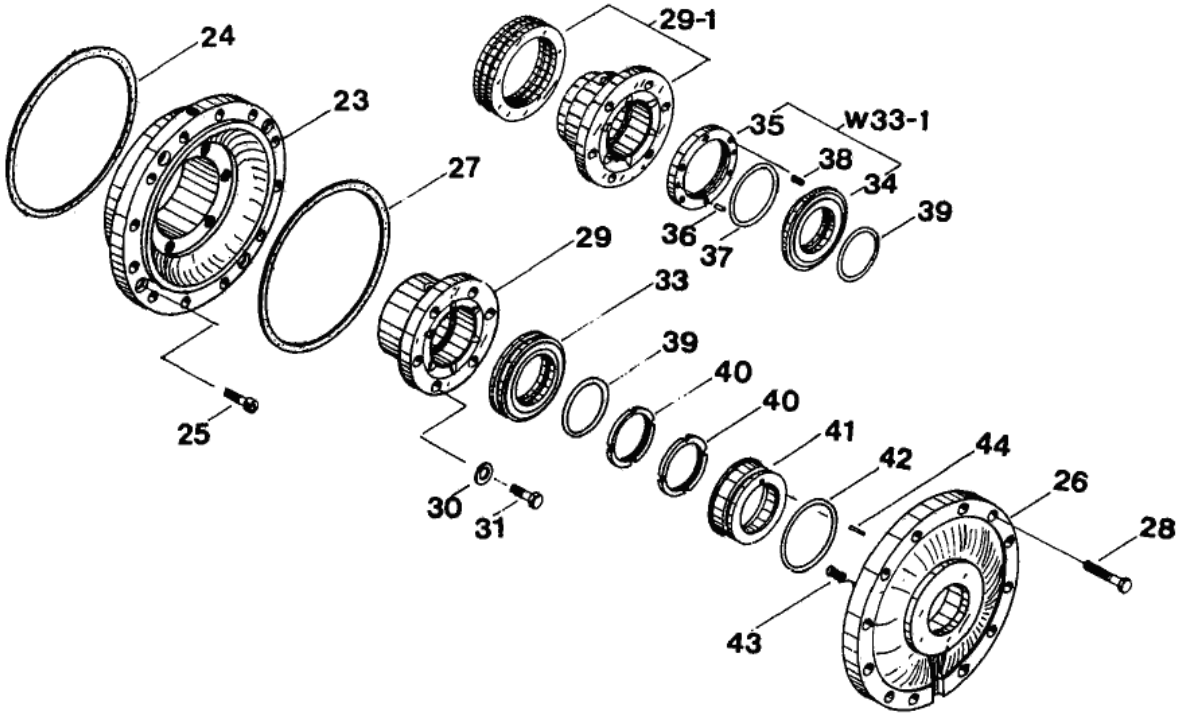

Figure 5-4 WA-type Shaft Seal and Thrust Bearing

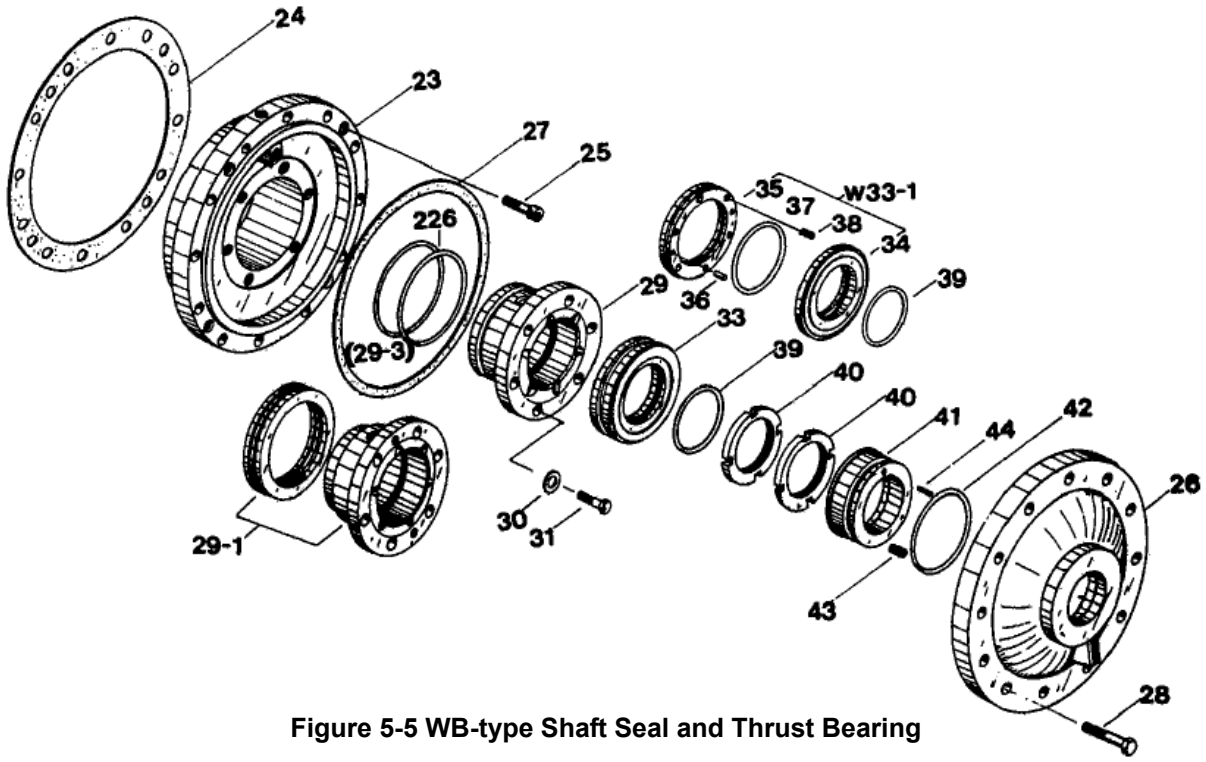

Figure 5-5 WB-type Shaft Seal and Thrust Bearing

5.5.11.1 Cover Plate

(Cover plate - WA: 11.0 kg, WB: 30.5 kg)

a) Remove two bolts at the top center of the cover plate and replace them with stud bolts for safety retention.

b) Remove all cover plate fastening bolts [28] except for the two bolts that are on opposite sides.

c) Alternately loosen the two remaining bolts. As the gasket may be tightly adhered to the cover plate, it is advised to lightly tap the flange of the cover plate [26] using a shock-less hammer after loosening the bolts to some extent, for easy removal. Since oil accumulated inside of this part, be sure to place a container below to receive oil before starting to work.

d) Pull out the cover plate straight, maintaining a right angle to the crank shaft. The cover will be removed with the internal seal ring [41].

e) Remove the seal ring (see the picture to the right).

5.5.11.2 Shaft Seal Collar

a) After the cover plate has been removed, use a special tool to unscrew and remove the lock nut [40] as shown in the picture below. In doing this, be careful not to damage the sliding surface of the double seal collar [33].

b) After removing the lock nut, pull out the double seal collar using the groove in the periphery. Even if it is difficult to remove, never put the tip of a screwdriver or others between the seal collar and the thrust bearing to pry it. Be sure to use the groove on the seal collar.

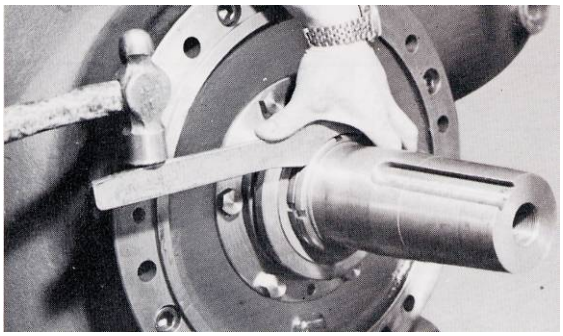

Special tool for loosening the seal collar lock nut

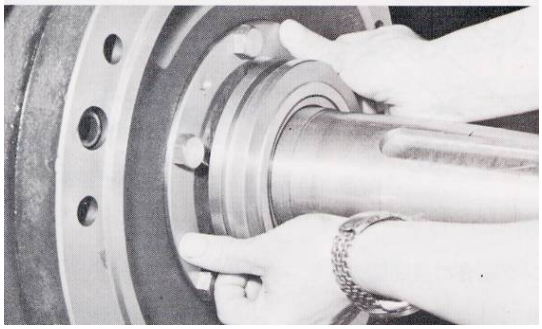

Removal of seal collar

Double seal collar

5.5.12 Thrust Bearing

In the case of a standard single stage compressor, remove the fastening bolts [31] first, and then pull it out using forcing bolts.

As the bearing head is engaged with clearance, it can be pulled out by lightly lifting the shaft.

There are two types of thrust bearings.

Refer to the note below Table 2-7 in Chapter 2, Section 2.2.2 of this manual.

For compressors with high suction pressure, BB (ball bearing) type thrust bearings are used. The BB-type bearings have a step to accommodate the thrust rolling bearing.

Also, if the suction pressure is low, such as in the case of single two stage compressors or booster compressors, two O-rings are used in the mating part in the periphery of the thrust bearing. As a considerable force is required to pull out, use the service screw holes on the thrust bearing to pull out.

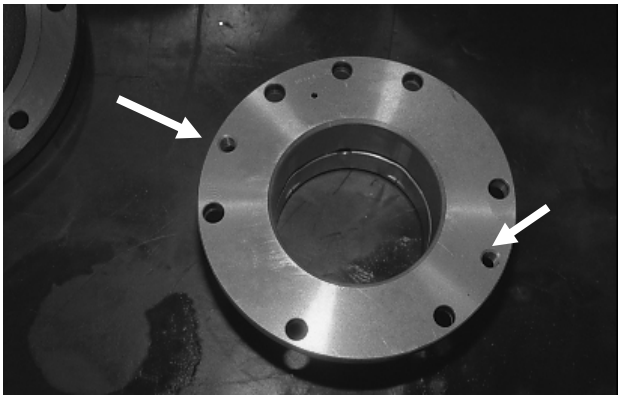

Service screw holes to pull out the thrust bearing

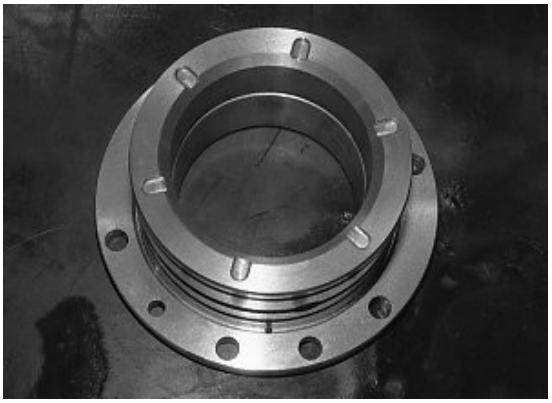

Standard thrust bearing

5.5.13 Bearing Head

(Bearing head - WA: 12.8 kg, WB: 29.0 kg)

Remove related piping components such as pressure gauges and oil pressure protection switches.

If any oil gauge or other component is directly mounted on the main bearing head, remove them to prevent possible damage during the disassembly and assembly processes.

Remove the bearing head fastening bolts [25], and then pull out the bearing head using the service screw holes provided.

Be sure to properly support the bearing head [23] during the work by suspending it or placing it on a support - if it is not properly supported when disengaged, it may hit the shaft and damage it.

5.5.14 Oil Pump

As different types of oil pumps are used in the W-series compressors while design changes have also been made, refer to Chapter 2, Section 2.1.5.2 “Oil Pump Types and Design Changes” for details.

Do not further disassemble the oil pump [56] after it has been removed as an assembly.

a) Before removal, be sure to record the arrow direction that shows the direction of rotation.

b) Screw the forcing bolt down to pull out the oil pump from the main bearing head [88] (remove the rust prevention cap indicated by the arrow in the picture to the left).

   As only one forcing bolt is used, gradually screw down the bolt while frequently hitting the opposite side using a shock-less hammer to lift it evenly.

c) As the O-ring will remain on the side of the main bearing head, be sure to remove it.

d) When the oil pump has been removed, the drag crank [3] can be seen as it is attached to the end of the crank shaft. As the pin of the drag crank is mated with the hole in the crank shaft, it can be horizontally pulled out.

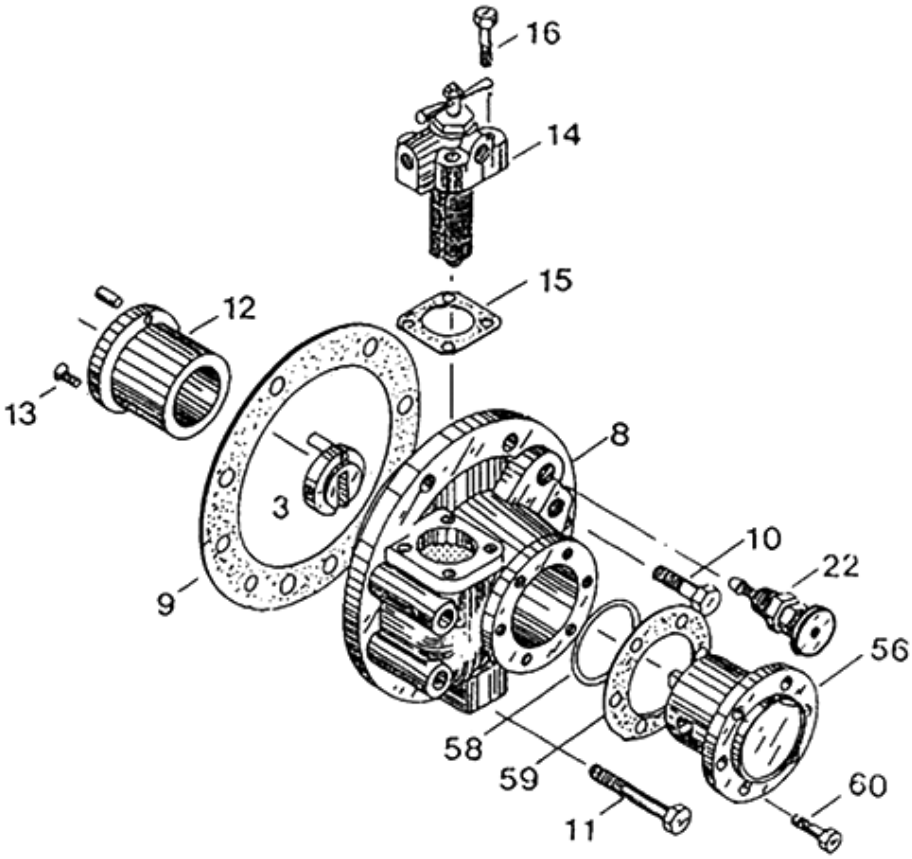

Figure 5-6 WA-type Main Bearing Head and Associated Parts

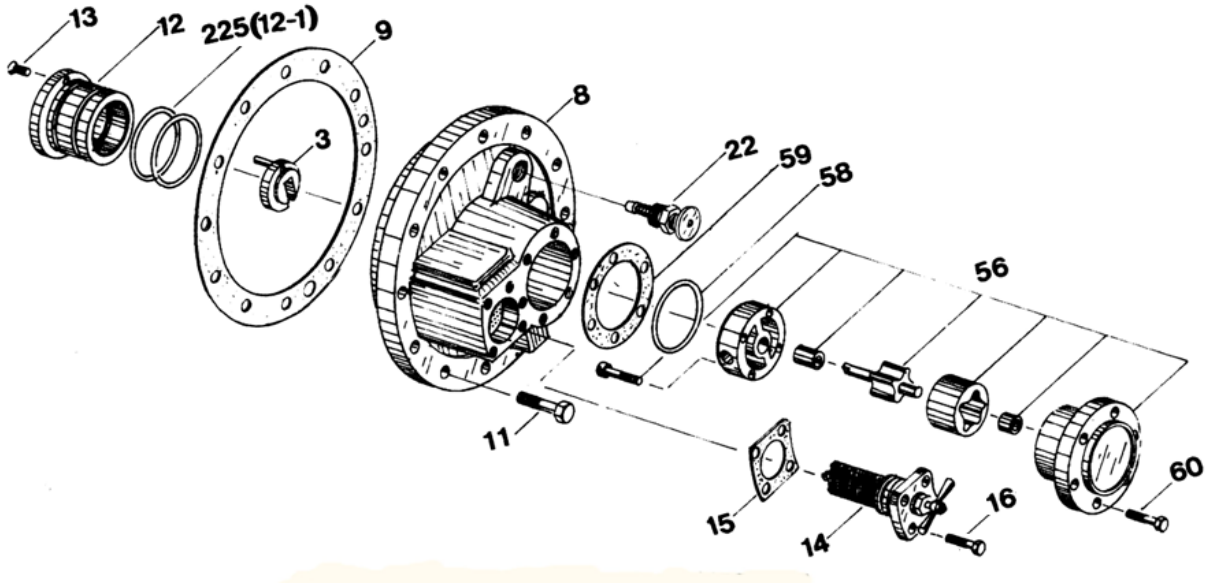

Figure 5-7 WB-type Main Bearing Head and Associated Parts

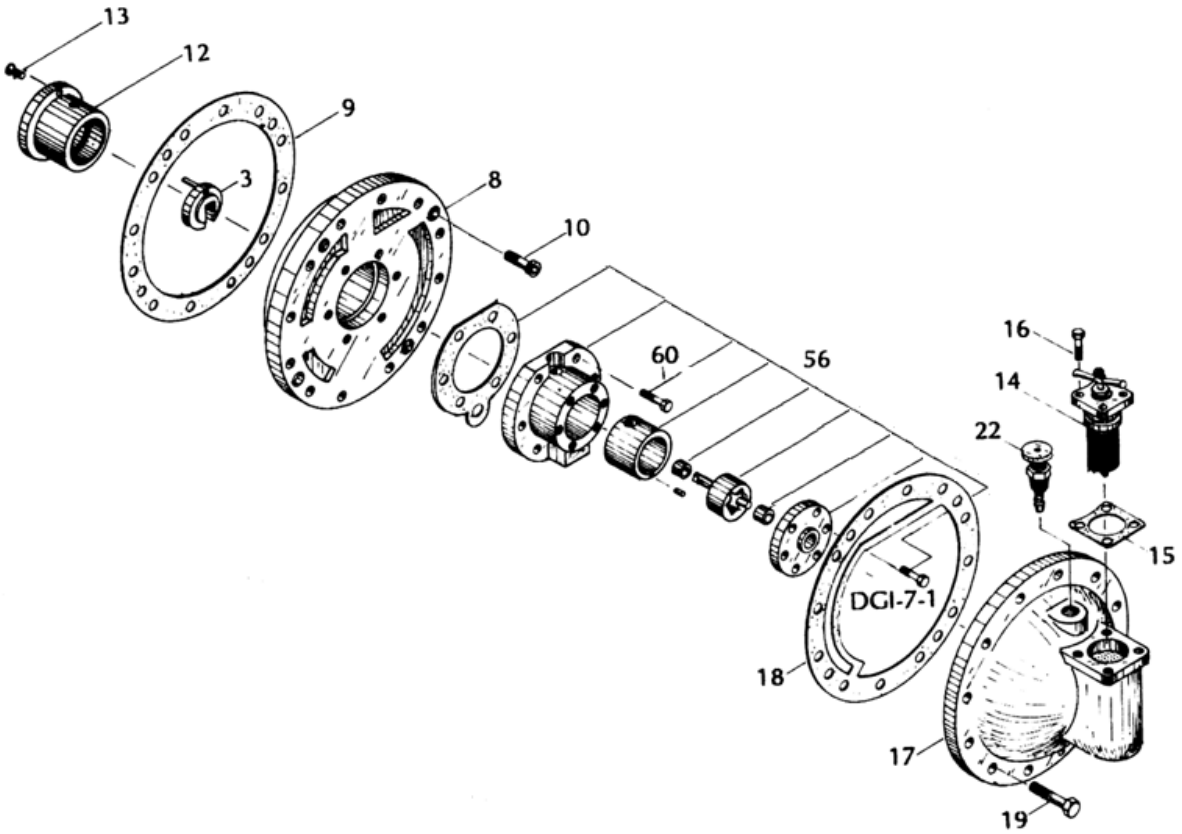

Figure 5-8 Type 12WB/12-4WB Main Bearing Head and Associated Parts

5.5.15 Crank Shaft

When the bearing head is removed, the crank shaft is supported by one end, i.e., by the main bearing [23].

a) To protect the crank pin area from damage, sufficiently wrap the area with protective cloth, masking tape, etc.

b) Insert an appropriate square timber or other bar from the hand hole to use it as a lever to hold the weight of the shaft, and slowly pull the shaft out of the crank case. Carefully keep the crank shaft level until the shaft end has been fully disengaged and taken out of the main bearing, as tilting it just prior to the disengagement can damage the sliding surface of the main bearing.

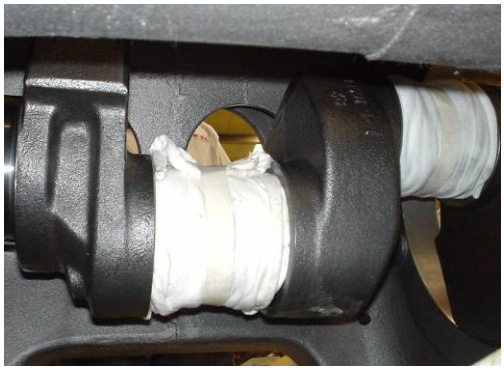

■ Procedures for 12WB and 12-4WB

Pull out the crank shaft with the intermediate shaft bearing attached.
The taper pin [131] that is fixing the intermediate shaft bearing to the crank case becomes movable by loosening the fastening nuts and patting on them with a shock-less hammer to release the tension of the outer shell. Use a box wrench from the cylinder hole to loosen the bolts little by little.

If the model has a step in intermediate shaft bearing area, a crank shaft holding fixture to use a section of a large diameter pipe as shown in Figure 5-10 may be used to facilitate the removal work. In this case, the both ends of the sliding fixture are fixed in place by bolts. The crank shaft can be easily slid on the fixture to make the removal work easier.
The intermediate shaft bearing can be separated into upper and lower pieces by removing the fastening bolts and then the taper pin. As the intermediate shaft bearing has a sufficient design margin, a relatively longer service life can be expected if it is kept free of any foreign matters.

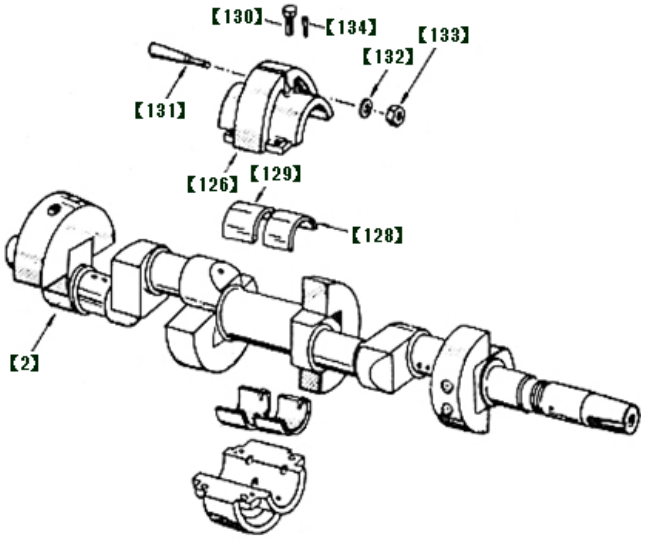

Figure 5-9 Intermediate Shaft Bearing

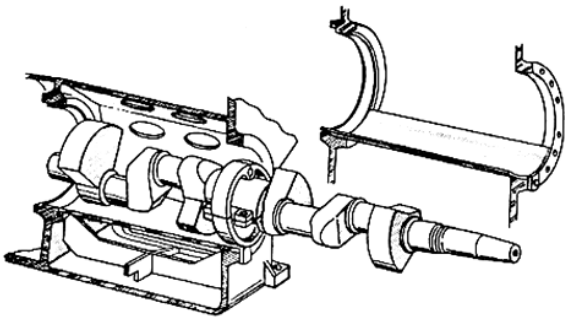

Figure 5-10 One Method of Extracting the Crank Shaft

5.5.16 Main Bearing Head

(Main bearing head - WA: 22.95 kg, WB: 45 kg, 12WB: 42.4 kg)

a) Remove the oil pipe connected to the main bearing head. If any oil pressure gauge or other component is directly mounted on the main bearing head [8], remove them to prevent possible damage during the disassembly and assembly processes.

b) Loosen the main bearing head fastening bolts [10], [11].
In the case of WA-type compressors, one of the main bearing head fastening bolts cannot be loosened unless the CUNO filter is removed beforehand.

c) Remove the gasket by screwing two forcing bolts into the two service screw holes placed oppositely. Pull the bearing head evenly to remove it from the crank case. You must be very careful, as the main bearing head is very heavy.

d) As the main bearing [12] is mounted inside the main bearing head, remove the main bearing screw [13] to pull out the main bearing.

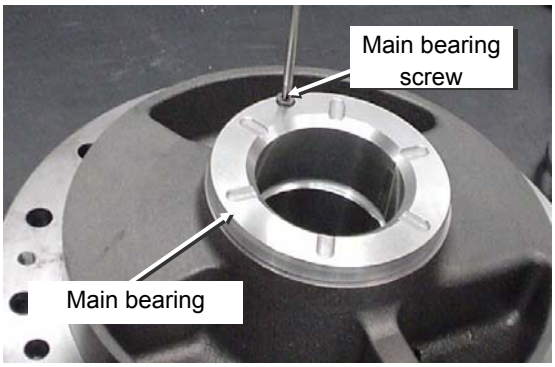

5.5.17 Strainer and Others

5.5.17.1 CUNO Filter

The CUNO filter is mounted by bolts on the oil pump discharge side of the main bearing head. Remove the bolts and pull the filter towards you to remove it as an assembly.

CAUTION

- **The CUNO filter consists of a main filter body with stacked thin metal plates and a scraper part with extremely thin metal plates to remove foreign matters attached in the periphery. Be very careful during the disassembly and assembly work not to hit the filter part.**
  Do not try to disassemble the CUNO filter assembly.

5.5.17.2 Oil Strainer

The oil strainer [119] is screwed into the oil strainer cover [121].
In the case of a standard type, the oil strainer can be pulled out with the cover by removing the strainer cover fastening bolts [123].

If the hand hole cover is open, you can also loosen the strainer screw itself by turning the hex part of the unit by a spanner.
If the strainer is not clean, remove any dirt on the surface and then use compressed air or nitrogen gas to blow out the dusts from the inside.

5.5.17.3 Scale Trap

The 2WA, 4WA, 4WB, 12WB, and 12-4WB model compressors have no scale trap.

a) Remove the fastening bolts [181] that are fastening the bottom scale trap cover [179] of the scale trap [175].
b) Once the scale trap cover has been removed, the internal wire mesh [178] can be easily removed as it is only pushed down in place by the scale trap cover.

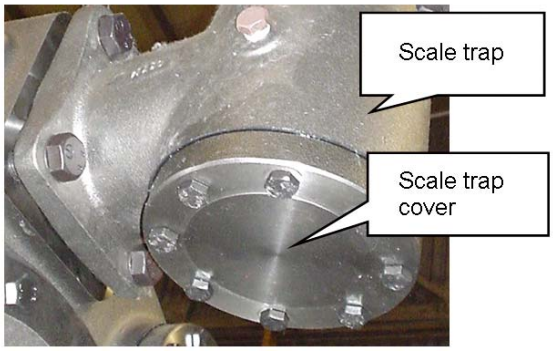

CAUTION

- **Even after the gas inside the crank case has been properly processed, this part may still contain lubricant and/or refrigerant in the low temperature state. When opening the cover, be very careful not to get such liquid thrown on you. For this, loosen the fastening bolts slowly and be sure to check the residual internal pressure or existence of any trapped liquid.**

5.5.17.4 Suction Strainer

The 62WA, 42WB, and 62WB model compressors have no suction strainer.
The suction strainer [154], which is located inside the crank case, is supported by the suction end cover [161] in the 12WB and 12-4WB models and by the suction end cover and spring [158] in other models.
In either case, the internal strainer can be easily pulled out by removing the suction end cover.

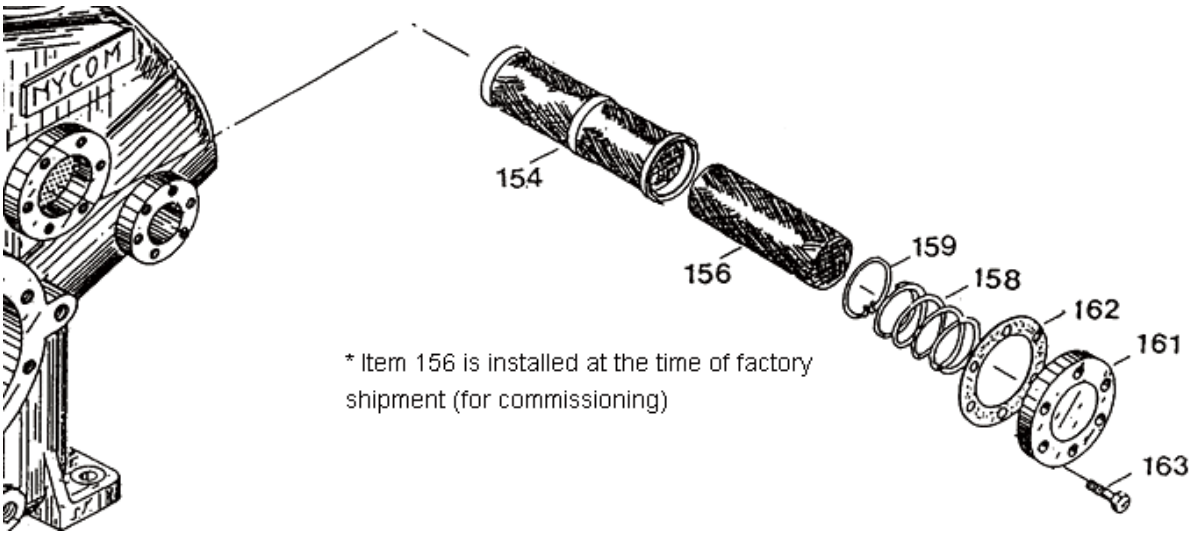

Figure 5-11 Suction Strainer

CAUTION
● **At the time of shipment of the compressor, a canvas bag [156] (used to capture any foreign matters) will be inserted inside the wire mesh in the scale trap/suction strainer to protect the wire mesh from possible damage by foreign matters sent from the system during the initial commission. If the use of these bags is continued even after completing the commissioning, the bags would be broken to cause a failure of the compressor. As such, be sure to remove them after the commissioning has been completed.**

5.6 Reassembly

WARNING

- **Be sure to use only MYCOM genuine parts for replacement. Use of non-genuine parts is very risky, as it can lead to possible damage or explosion of the compressor and/or other equipment during operation. Also, there is a high risk of electric shock due to electric leakage.**
- **Be very careful when you carry a heavy piece of equipment. The work must be performed by a number of people appropriate to carry the weight. Also, be sure to use stud bolts (safety retention bolts) and other support tools for the work. Neglecting the above warning can lead to low back pain of the worker or injury due to dropping of the parts.**

CAUTION

- **During the assembly work on the compressor, use the correct tools specified. Using worn-out or damaged tools or tools inappropriate for the work increases the risk of personal injury.**

CAUTION

- **For the composition of the suction valve and discharge valve, refer to Chapter 7, Section 7.3 "Configuration of Plate Valves and Associated Parts" in this manual.**
- **When replacing parts, check the type and compatibility before the assembly work.**
- **If any minor defect is observed on the parts to be assembled, such as a minor scratch caused during disassembly or surface rust due to a long storage period, use a sand paper (#800 to #1200) to remove them.**
- **Assembly parts shall be washed using wash oil (e.g., light oil) and kept clean.**
- **Washed parts shall be dried by compressed air or wiped up using clean cloth. Do not use synthetic textiles or woolen textiles to prevent fibers from attaching the parts.**
- **Prepare new lubricant in an oil feeder and apply the oil to various sliding surfaces immediately before the assembly work.**
- **Apply a sufficient amount of lubricant on both sides of the gasket before assembly.**
- **Some gaskets have holes for oil supply purposes other than bolt holes. During assembly, carefully check the oil hole locations for not to part any oil supply line by a gasket.**
- **All tools used must be kept clean before use. Do not use worn-out, deformed, or damaged tools as they may cause damage to the assemblies and parts.**
- **When tightening the fastening bolts, first fasten four diagonally opposite bolts applying 50 percent of the tightening torque specified in the table below. Then, fasten all bolts in the clockwise order applying the specified torque. When fastening a part with a gasket, the bolts fastened earlier tend to become loose as the remaining bolts are fastened. So, be sure to tighten the first two bolts again.**

Table 5-10 Tightening Torque of Hex Bolts

Size		M10	M12	M16	M20	M22
Torque	N·m	40	80	120	220	300
	kg·cm	400	800	1200	2200	3000

* The tightening torques for the flywheel (pulley) set bolts, the first and second crank pin fastening nuts, and the first and second discharge valve fastening nuts are separately specified. Refer to the relevant figures in Chapter 7, Section 7.4 “List of Tightening Torques for Bolts and Nuts” of this manual.

Start the reassembly work after completing the cleaning of the assembly parts and tools. Most of the reassembly work will be performed in the reverse order of the disassembly work. Perform the reassembly work by observing the precautions and referring to the details in Section 5.5 “Disassembly” in this manual.

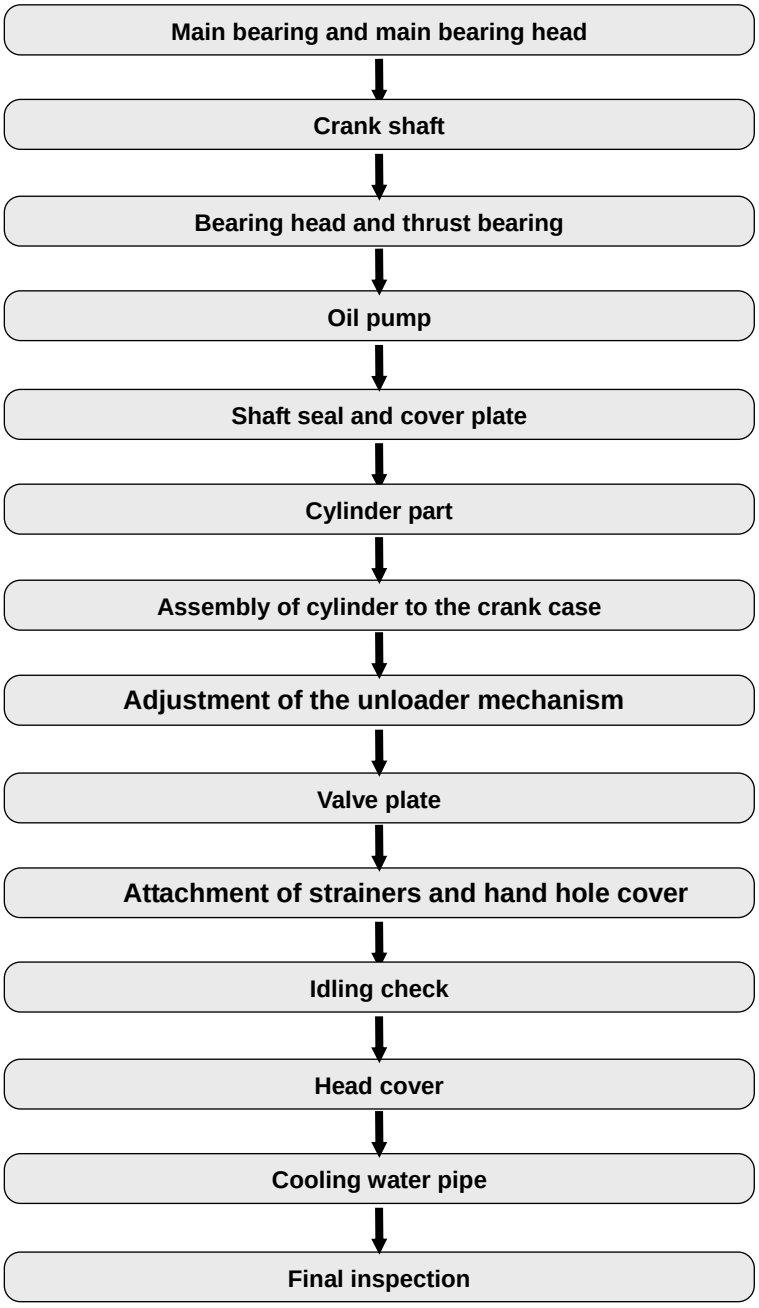

Figure 5-12 Flow of Reassembly Work

5.6.1 Main Bearing and Main Bearing Head

During the assembly work, be careful about the position of bolt holes and oil holes of gaskets. If any hole is not placed in a correct position, it can lead to oil supply failure.

a) Insert the main bearing [12] into the main bearing head [8].
Check that the screw hole of the countersunk screw (main bearing screw [13]) is correctly aligned with the oil hole.

CAUTION

- **In the case of WB-type single two stage compressors, two O-rings [12-1] are used on the outside of the main bearing to maintain the oil pressure. Be sure to install them as these O-rings can be easily forgotten.**

b) Tighten the main bearing screws. Check that each head of main bearing screws is not protruded from the thrust receiving surface of the main bearing.

c) Stick the main bearing head gasket [9] to the main bearing head. Make sure that the oil holes of the gasket are correctly positioned on the oil holes of the main bearing.

d) Attach the main bearing head to the crank case and tighten the fastening bolts with the specified torque.
In the case of WA-type compressors, be sure to mount the CUNO filter as soon as the main bearing head has been attached to prevent any dust or foreign matters from getting into the oil line.

CAUTION

- **When the main bearing head has been inserted to the crank case by about 70 percent of the total amount, check again that the two oil holes of the head are correctly aligned with the holes on the crank case. After the correct positioning has been confirmed, make the main bearing head closely contact with the flange of the crank case.**

[**POINT**]

- In the case of 12WB and 12-4WB models, mount the intermediate shaft bearing onto the crank shaft first, and then temporarily fix the intermediate shaft bearing to the crank case. Make sure the joint surface at the center is level and that the outer periphery is positioned at the center of the fitting hole. The final tightening of the intermediate shaft bearing bolts shall be made after all other shaft bearings have been fully assembled.

[**POINT**]

- (for reference only) The main bearing for the WB-type compressors has nearly the same outline and dimensions as that for the SF/SFW-series (special marine type) compressors. If an oil groove is present on the collar side of the metal, it should be for SF/SFW-series compressors. If the main bearing for the SF/SFW-series compressors are used at or below the atmospheric pressure, the crank shaft will be pushed toward inside by the differential pressure between the inside and outside of the crank case. As the crank shaft will make contact with the collar of the main bearing being pushed by the force, the oil groove is provided for the purpose of lubrication.

However, in the case of the W-series compressors, because the move of the crank shaft due to the differential pressure is limited by a lock nut, the collar of the main bearing will not be significantly loaded by such a contact, in principle.

5.6.2 Crank Shaft

There are two types of the crank shaft according to the standard and BB (ball bearing) specifications. Be careful about the difference when the crank shaft is to be replaced.

a) Similarly to the case of disassembly, properly protest the crank pin area,
b) Insert the crank shaft using proper tools (squared timber) and with as many people as required for carrying the weight.
   When inserting the crank shaft into the main bearing, put the shaft at once in one motion without stopping on the way. Stopping on the way can damage the main bearing due to the weight of the crank shaft.
   If any squared timber is used, check that no piece of wood is left in the crank case.

[**POINT**]

- The BB (ball bearing) specification crank shaft has a step to mount the inner ring of the thrust ball bearing as shown in the picture below. Insert the crank shaft into the thrust bearing with the inner ring of the thrust ball bearing assembled on the step portion of the crank shaft.

Step on the shaft to install the inner ring of the thrust ball bearing

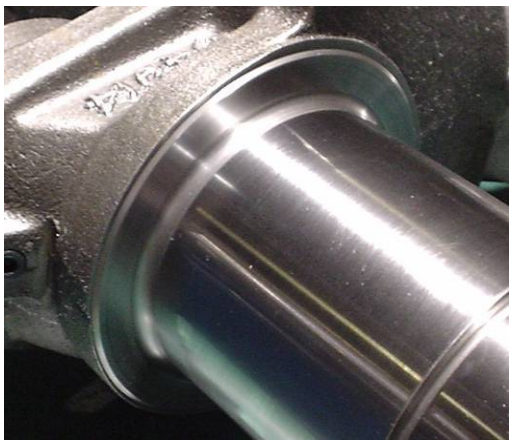

Standard crank shaft

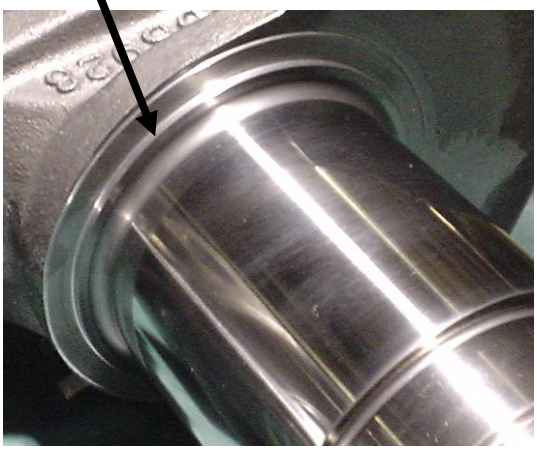

BB-specification crank shaft

Thrust bearing with ball bearing

5.6.3 Bearing Head and Thrust Bearing

a) Similarly to the case of the main bearing head, check the alignment of the oil holes of the bearing head [23] against the oil holes of the gasket [24]. Assemble the bearing head with the oil supply hole up. Tighten the four hexagon socket head cap screws [25] with the specified torque.

b) Mount the thrust bearing [29] with the oil hole up and the oil grooves in the 45° (2 o'clock and 10 o'clock) positions. As in the case of the main bearing [12], WB-type compressors use a thrust bearing of which size is the same as the ones for the SF/SFW-series compressors.
If both sides of the thrust bearing have an oil groove, it is for the WB-type compressors. The thrust bearing for the SF/SFW-series has an oil groove only on the inside of the crank case, not on the thrust surface of the seal collar.
Also, some parts for older models have the oil supply hole in the opposite (i.e., 180 degrees different) position. In this case, the oil grooves are at 4 o'clock and 8 o'clock positions when the oil hole is at the 12 o'clock position. These are the parts for the compressors produced before 1969. If these parts are used for newer models produced after 1969 by mistake, the oil grooves will be positioned at 4 o'clock and 8 o'clock, and it makes it easier to accumulate dirt in the grooves.
Make sure before assembly that the positional relationship between the oil hole and oil grooved is correct.

CAUTION
● **In the case of WB type single two stage compressors, two O-rings [29-3] are used on the outside of the thrust bearing to maintain the oil pressure. Be sure to install them as these O-rings can be easily forgotten.**

c) For the fastening bolts, be sure to use the washers [30]. As the back metal of the bearing is aluminum (i.e., softer than the bolt), tightening the bolts without a washer not only damages the bearing fastening surface, but also makes the tightening torque insufficient in some cases.

5.6.4 Shaft Seal and Cover Plate

a) Attach the double seal collar [33] and check the movement condition of the spring [38].
Place something on a clean flat surface, and push it by hand to confirm that it moves smoothly and uniformly without being caught.

b) Turn the crank shaft so that its locking ball is at the top.

c) Assemble it by aligning the locking ball position with the detent cut in the double seal collar. In this, be careful not to damage the O-ring [42] inside the seal by making it contact with the thread of the lock nut.

d) Push the double seal collar all the way up to the end, and screw the lock nut [40] on the thread of the shaft. As a fine pitch thread is used here, carefully turn the nut by checking that it is correctly engaged with the thread without being inclined.

e) Use a special lock-nut tightening tool to tighten the lock nuts one by one. In this, as a hammer is used to hit the handle of the tightening tool while tightening the nut, be very careful not to damage the sliding surface of the seal collar by the hammer.

f) After tightening the nut, measure the amount of movement of the crank shaft in the thrust direction (i.e., thrust gap) using a thickness gauge as shown in the picture to the right.
The correct gap is in the range of 0.08 to 0.18 mm. Measure the gap at four places, i.e., top, bottom, left, and right.

g) Check that the spring pin [44] attached to the cover plate [26] is not bent. Apply lubricant to the O-ring [42] and place it in the seal ring [41]. Then, place the seal ring [41] in the cover plate [26]. In doing this, align the position of the 4 mm diameter hole on the seal ring with the position of the spring pin [44] attached to the cover plate. After the assembly, press the seal ring to confirm that it moves smoothly and evenly.

h) As the cover plate is quite heavy, screw two stud bolts into the top two screw holes of the crank case for ensuring the safety.

i) Apply oil on the sliding surface of both seals (i.e., double seal collar and seal ring). Also apply oil on the gasket [27] and place it on the cover plate side. When installing the cover plate, hold it with the oil drain hole side down and keep the flange surface of the cover plate at right angle to the crank shaft to mount it. In this, be careful not to make the seal contact with the crank shaft.

j) At first, tighten diagonally opposite fastening bolts gradually and evenly. After checking that the cover plate is securely fastened to the crank case, screw all the remaining bolts and tighten them with the specified tightening torque.

5.6.5 Oil Pump

a) Turn the crank shaft so that the hole for the drag crank pin is at the top position.

b) Insert the pin of the drag crank [3]. In this, adjust the position to set the cut-out slot in the center. For this, use the center hole of the crank shaft as a reference (See the below right picture).

c) Set the O-ring [58] for the oil pump on the main bearing head [8], and set the oil pump gasket [59] on the oil pump [56].

d) After manually turning the oil pump shaft to adjust the position of the flat surfaces of the shaft to be engaged with the cut-out slot of the drag crank, insert the oil pump into the main bearing head.
If the slot of the drag crank is not successfully engaged with the oil pump shaft, the oil pump will stop moving at about 10 mm before the correct position. Do not try to forcibly fasten the bolts in this state.
In such a case, as the cut-off portions on the oil pump shaft are out of position with the cut-out slot of the drag crank, pull out the oil pump, adjust the shaft angle, and reinstall the pump.

e) Turn the oil pump such that the indicator plate that shows the direction of oil pump rotation is positioned at the top. After making sure that the arrow direction is the same as the direction of rotation of the crank shaft, tighten the oil pump fastening bolts [60].
If it is found that the arrow on the indicator plate is in the reverse direction, turn the oil pump further by 180 degrees to find another indicator plate of which arrow should show the correct direction of the compressor rotation.

CAUTION

- **To quickly change the direction of rotation of the oil pump, you may pull out the oil pump body by 1 to 2 mm and then turn it by 180 degrees. However, if the gasket may be degraded or it is necessary to check, be sure to follow the above procedures to check it from first. (If the oil pump body is pulled out by 10 mm or more, the oil pump shaft will be disengaged from the drag crank.)**
  When changing the rotation direction by pulling out the oil pump by 1 to 2 mm, make sure beforehand that the pressure inside the compressor is at the atmospheric pressure.

5.6.6 Cylinder Part

5.6.6.1 Piston and Piston Ring

a) Set the piston ring to the piston carefully not to excessively widen the ring end gap, using the same method used in the disassembly process. As the piston rings have a marking at one end of the ring as shown in the picture to the right, set the rings with the marking facing up.
Set the upper three rings from the bottom side, i.e., in the order of the third ring, second ring, and then first ring.

b) When setting the fourth piston ring, place the piston upside down, carefully check the direction of the marking on the ring, and set the ring in position.

c) After setting all piston rings, check that each piston ring can freely move in the groove. The typical gap between the piston ring and the groove wall is 0.05 to 0.09 mm.

d) The end gap positions of piston rings shall be separated by 120 degrees with each other.

Table 5-12 Piston Ring Configuration of W-Series Compressors (common to single stage and single two stage machines)

	Standard		Propane, R23, (round haul netter NH3)
	R404A, R507A, etc.	NH3	
1st	FC–PC–BF–G1		
2nd	FC–P		GA–P
3rd	FC–PC–BC3P		
4th	FC–PC–BC3		

FC: Special cast iron, GA: Special alloy, P: Plain

5.6.6.2 Connecting Rod

Two types of connecting rods are used, i.e., one is the standard type (below left picture) and the other is used in the high-stage of single two stage compressors (below right picture).
The ones for the high-stage use a needle bearing for the small end bush.

[**POINT**]

- The WB type connecting rods have the same size of the large end and small end as the ones used for SF/SFX type compressors although the distances between the axes are different.
  As such, there is a risk of making a mistake.
  In the case of using the stock, please measure the distance between centers, just to make sure.
  The distance is 300 mm for the connecting rods used in WB-type compressors.

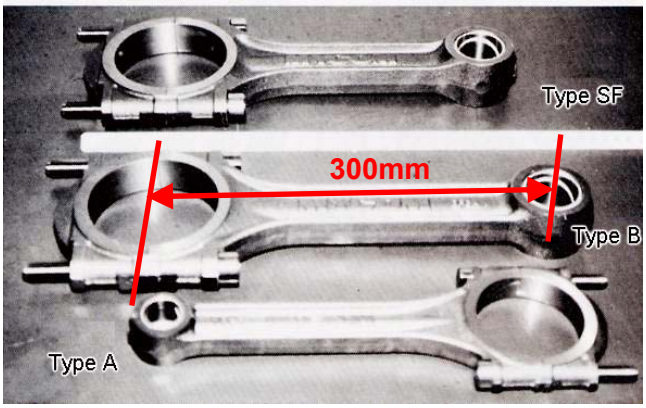

a) Use the piston pin [86] to attach the piston [85] to the small end of connecting rod [77] ([76] for the high-stage).
Each connecting rod is marked with the combination number and the cylinder number. The piston must be attached to the connecting rod such that the orientation of the cylinder number marked on top of the piston becomes the same as the orientation of the of combination number marked on the connecting rod.

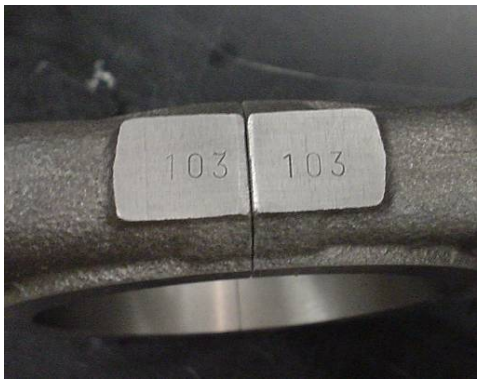

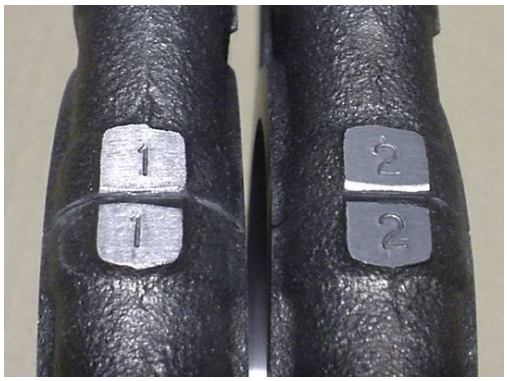

CAUTION
● **Do not hit the piston pin directly by an iron hammer even if it is tight, as the end face may be enlarged. Use a shock-less hammer or a pad, such as a Teflon part, for not to directly hit the pin, and handle it with care.**

b) After inserting the piston pin, set the piston pin lock spring [87] in the ring groove of the piston pin hole on both sides of the piston. Make sure that the piston pin lock spring is securely engaged in the ring groove on both sides.

c) Attach the bearing halves onto the large end of the connecting rod. The bearing halves are designed to fit with the large end of the connecting rod by its own tension. Align the protrusion at the end of the bearing halves with the notch in the large end of the connecting rod and press the bearing halves into place. The bearing halves consists of the upper metal bearing with an oil groove and oil hole and the lower metal bearing without any oil groove or oil hole. Fit the upper metal bearing to the connecting rod body and fit the lower metal bearing to the rod cap of the connecting rod.

5.6.6.3 Cylinder Sleeve

a) Check the orientation of the cut-out portion of the cam ring (left down [62] or right down [63]) as well as the assembly position (cylinder number) of the cam ring. Set the piston of the same position as shown.

b) As the bottom end of the cylinder sleeve is tapered, i.e., “cylinder ring drop”, you can set the cylinder in the upright position and easily insert the piston and connecting rod assembly from the above.

5.6.7 Assembly of Cylinder to the Crank Case

If the unloader mechanism in the crank case has been disassembled, reassemble the unloader by referring to Section 5.5.5 “Unloader Mechanism” in the reverse order of the disassembly procedures.

a) As shown in the below left picture, set the protrusion of the unloader push rod exactly at the bottom (or top, depending on the type and cylinder) of the center line of the hole of the crank case from which the cylinder is assembled. If the protrusion of the unloader push rod is not on the center line of the cylinder hole, remove the hexagon socket head cap screw on the unloader cover and screw the eye bolt of the disassembly tool into the screw hole. Then, turn the eye bolt to push the unloader piston for position adjustment, as shown in the below right picture.

Position of the protrusion of the unloader push rod (when it is at the bottom)

Position adjustment of the unloader push rod

b) Turn the crank shaft to the position the piston of the cylinder will be at the bottom dead center. As seen from the cylinder hole of the crank case, the oil holes of the crank pin of the crank shaft will be seen in front of you, as shown in the picture to the right.

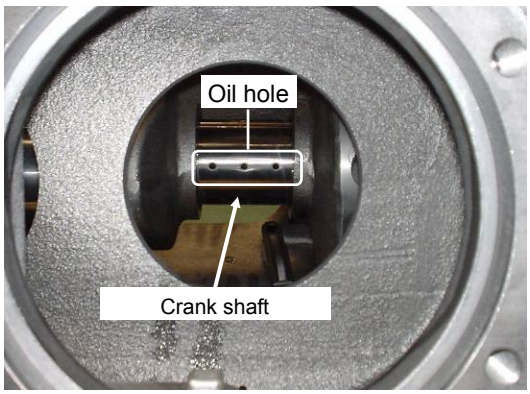

c) Apply a sufficient amount of lubricant to the cylinder sleeve gasket, such that the gasket will not fall off when it faces down upon assembling the cylinder assembly, and attach it to the back side of the lip of the cylinder sleeve [61].

d) Prepare the connecting rod cap that is paired with the connecting rod of the cylinder assembly to be assembled. Check that the three-digit combination numbers of the pair agree.

e) Lay the cylinder assembly on its side and screw the eye bolt of the disassembly tool into the screw hole at the center of the recessed area on the head of the piston.

f) Check again the cylinder number and the slope of the cam ring (left down [62] / right down [63]). Adjust the position of the cut-out portion of the cam ring such that it is positioned at the protrusion of the unloader push rod of the cylinder being assembled onto the crank case. At this time, also set the cut-out portion of the retaining ring [65] to align with the cut-out portion of the cam ring.

g) When mounting the cylinder assembly into the crank case, carry it out in the reverse order of the disassembly procedures. In this, set the piston in the cylinder to the top dead center position. The cylinder number marking on the piston must be in the upper position.

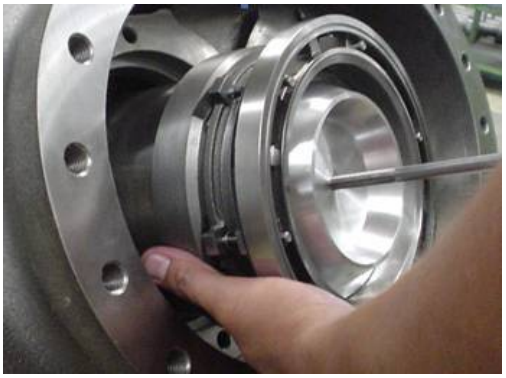

[**POINT**]

- In this state, in the case of a cylinder assembly that can be mounted in the tilted state (i.e., according to the structure of the crank case or cylinder arrangement), the three-digit combination number marking on the large end of the connecting rod should be on the bottom side when it is mounted to the crank pin of the crank shaft.

h) Once the large end of the connecting rod of the cylinder assembly has passed the inner hole of the crank case, support the cylinder assembly by your hand from another cylinder hole on the crank case while doing the assembly work.

i) Once the lip of the cylinder sleeve is inside the crank case, hold the large end of the connecting rod in the direction of the crank shaft pin while gradually pushing down the piston to engage the large end to the crank pin.

CAUTION

- **If the piston is pushed without holding the large end of the connecting rod in the direction of the crank shaft pin, the bottom end of the connecting rod can easily hit the crank pin to give damage to it.**

j) Attach the connecting rod fastening bolts. Set the cut-out portion of the bolt head (which prevents turning of the bolt) to the cut-out portion of the rod body.

k) Mount the rod cap by making sure that the orientation of the three-digit combination number on connecting rod cap is the same as that of the connecting rod body. Use your hand to attach a washer to each of the connecting rod fastening bolts and then attach the nuts.

m) Alternately fasten the first connecting rod fastening nuts and then tighten them with the specified torque. Then, attach the second connecting rod fastening nuts and tighten them with the specified torque.

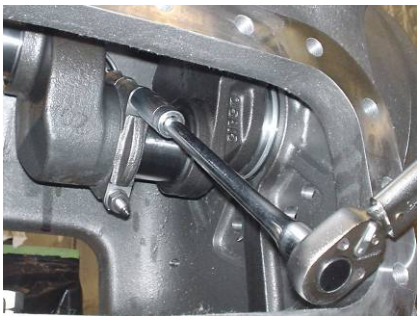

CAUTION

- **Hold the nut portion of the assembled connecting rod and try to move it to the right and left. If it does not move, it may be the case that the connecting rod cap is reversely mounted to the connecting rod or the rod cap used is that of a different cylinder.**

n) After completing the assembly of one cylinder, proceed to the assembly of the next cylinder.
Turn the crank shaft to the position the piston of the cylinder to be assembled next will be at the bottom dead center.

[**POINT**]

- At this time, the cylinder sleeve is not fixed in place. As the cylinder sleeve can be easily lifted when the piston goes up, hold the lip of the cylinder sleeve while turning the crank shaft to a position convenient for the assembly.

o) Repeat the above procedures until completing the assembly of the last cylinder. When completed, check that there is no mistake in each part.
After checking from the hand hole of the crank case that the three-digit combination numbers of each connecting rod agree with each other, the work to mount the cylinder assemblies in the crank case is complete.

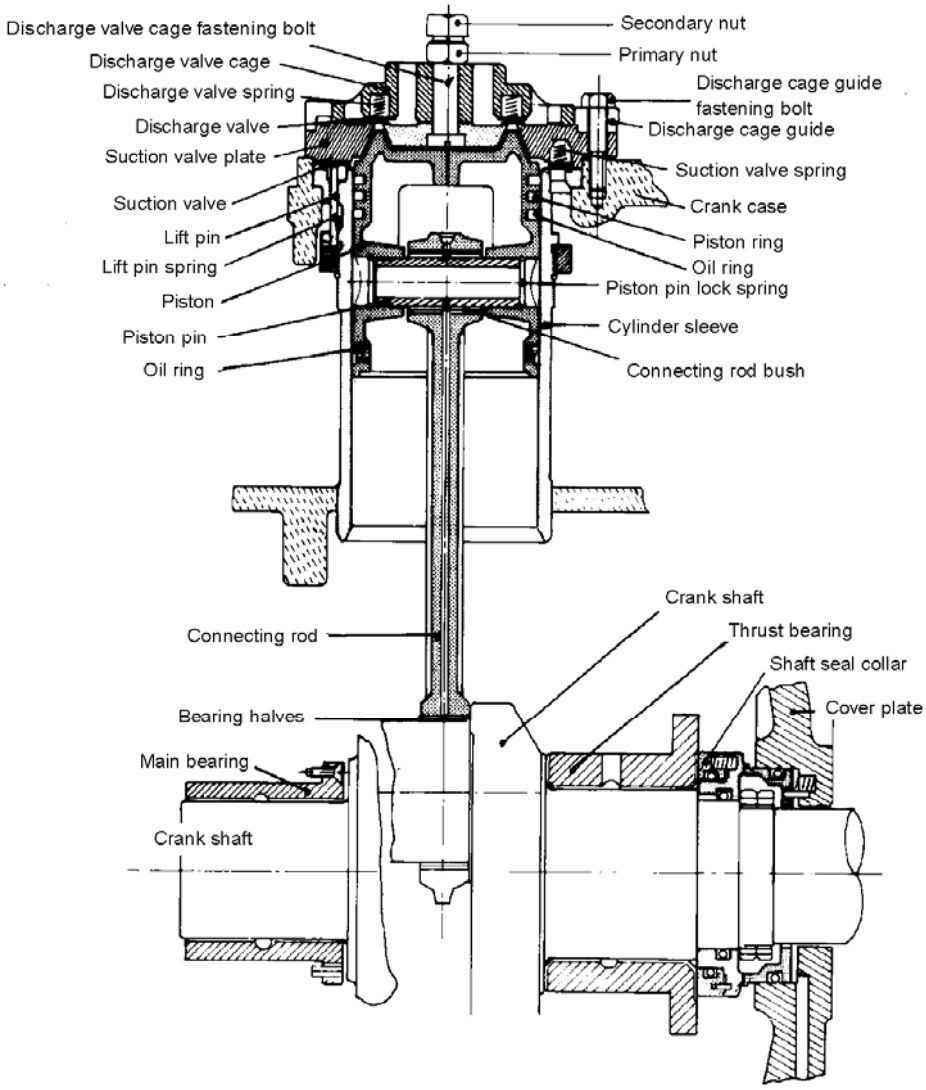

Figure 5-13 Sectional View of the Cylinder and Other Components

5.6.8 Adjustment of the Unloader Mechanism

If the cylinder sleeve has not been replaced, the lip portion of the cylinder sleeve should have a triangular marking that has been made after the unloader has been adjusted in the factory.

In addition, the crank case has a line marking to be used for the alignment.

The adjustment is completed by simply aligning the triangular marking on the cylinder sleeve with the line marking on the crank case, for each of the left and right cylinders.

If the cylinder sleeve has been replaced by a new one, there should be no triangular alignment marking on the cylinder sleeve. In this case, the adjustment shall be made using the line marking on the crank case as a reference.

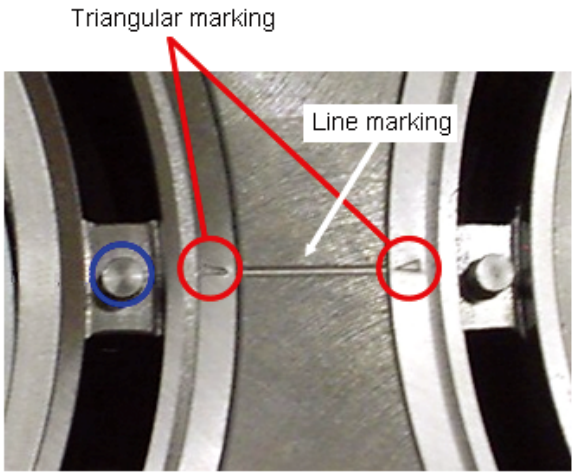

a) First, set the lift pin of the left side cylinder sleeve (the pin in the blue circle of the above picture) just adjacent to the line marking on the crank case.

b) Screw in and out the adjustment eye-bolt to adjust the height of the lift pin to make the head of the lift pin leveled with the seat surface of the cylinder sleeve. As shown in the below right picture, use a scale or something to check the height for an accurate adjustment.

Adjustment of push rod position

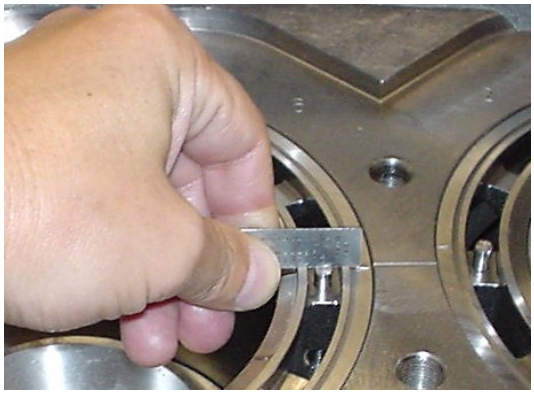

Adjustment of lift pin height

c) After completing the height adjustment for the left-side cylinder, adjust the lift pin height of the right side cylinder. The height of the lift pin of the right side cylinder can be adjusted by turning the cylinder sleeve in either the CW or CCW direction. Once the height of the head of the lift pin is level with the seat surface of the cylinder sleeve, the adjustment of the unloader mechanism is completed for both the left and right cylinders.

d) To make the adjustment of the unloader mechanism easier for the next time, use a center punch or other marking tool to lightly mark a point on both the left and right cylinder sleeves just adjacent to the corresponding line mark on the crank case.

[POINT]

- Before adjusting the height of the lift pin, find the highest height lift pin among the six lift pins to use it for the height adjustment.

5.6.9 Valve Plate

a) Set the suction valve springs [72] in the spring holes of the valve plate [73]. As the springs are slightly tapered, put the larger diameter end first in the spring hole, and then twist it in the winding direction to press in the spring into the spring hole.

b) If the cylinder to mount the valve plate has the unloader mechanism, push in the unloader piston first to set it in the loaded condition (push down the lift pin).

CAUTION
● **If the above procedure is not followed and the valve plate is assembled with the lift pin up, the suction valve can be easily broken or deformed and cause a failure such as no compression (gas leak).**

c) Assemble the suction valve together with the valve plate [73]. Then, check that the suction valve is securely set.

d) The positioning of the valve plate is different for the WA-type and WB-type compressors.

- ■ WA-type:
  The periphery of the valve plate is positioned by the mating portion on the crank case.
  The sleeve seat surface is 0.1 mm out of the crank case.
- ■ WB-type:
  The lip of the sleeve has a step which mates with the step on the bottom surface of the valve plate to determine the position. The sleeve seating surface is 0.9 mm lower than the crank case surface.

e) Stack the discharge cage guide [74], screw two fastening bolts on the top and bottom of the valve plate, and fasten them to the extent the assembled parts will not move easily.

f) Then, similarly assemble the part for the adjacent cylinder. After both valve plates have been assembled, evenly tighten all the fastening bolts to finally tighten them with the specified torque.

g) After the valve plates have been mounted, remove the hanger eye bolt of the unloader cover. Promptly fasten a cap bolt with a washer, for not to forget fastening it.

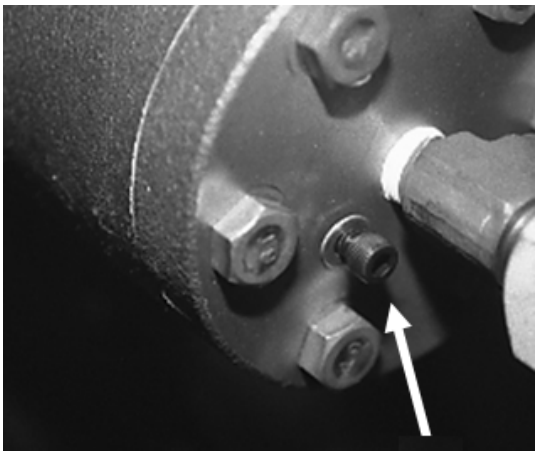

5.6.10 Attachment of Strainers and Hand Hole Cover

a) Screw the oil strainer [119] into the oil strainer cover [121] and mount it to the crank case.

b) Insert the scale trap mesh [178] and suction strainer [154], and attach the respective covers.

c) Before mounting the hand hole cover, check that nothing is forgotten, such as the fastening of the connecting rod fastening nuts, or any foreign matter in the crank case.

d) For the purpose of safety, screw the stud bolt of the disassembly tool into the top center position.
There are two types of hand hole cover, i.e., with a window [45] and without a window [46]. Mount the hand hole cover with a window (oil sight glass) [45] on the side which is easier to check the oil level.
Attach the gasket [47] and hand hole cover, and then screw-in the hand hole cover fastening bolts [48]. Remove the stud bolts, screw the fastening bolts, and lastly tighten the bolts with the specified torque.

e) Mount the oil cooler and connect the external oil pipes.
Be sure to mount all the pipes that have been removed during disassembly, including the unloader pipe and pressure pipes of pressure gauges. Before assembling the pipes, use compressed air to blow out any foreign matters inside pipes and clean them. Securely fasten the pipe joints.

f) Mount the flywheel (pulley) or coupling hub on the crank shaft and install the V-belt or coupling assembly to make the compressor ready for idling run.

WARNING

- **For the purpose of safety, be sure to mount the belt cover or coupling guard.**

g) Remove the plug (3/4”) on the upper center part of the hand hole cover and supply lubricant. After finishing the oil supply, do not forget to fasten the plug with seal tape on the thread.

5.6.11 Idling Check

This process must be performed before mounting the discharge valve assembly, head spring, and head cover.
By idle running the compressor in this condition, you can confirm that every part of the compressor is operating normally and that there are no assembly errors.

■ Oil pressure check

Until the oil pressure gauge becomes operational, repeat the cycle of starting the compressor and stopping it in a few seconds. After checking that the oil pressure rises, start to run the compressor continuously.
Turn the oil pressure control valve to make sure that the oil pressure changes.
Then, set the pressure to the gauge pressure of 0.25 MPa.

CAUTION
● **Just after starting to run the compressor, the lubricant temperature is still low and thus the viscosity is also high. If the compressor is started up with the oil pressure control valve in the fully closed state, the gauge pressure may exceed 1 MPa to cause possible adverse effects to the oil pump. Before starting up the compressor, once fully close the oil pressure control valve (i.e., turn it in the CW direction). Then, after turning it in the CCW direction for three turns to open the valve, start up the compressor.**

If the oil pressure gauge does not show pressure when the start and stop cycle is repeated for several times, the oil line of the compressor may have problems. Resume the idling run after checking the oil line and removing any errors.

■ Checking the idling noise of the compressor

Carefully listen to the idling noise of the compressor for several minutes after it has been started up. If the compressor has been normally assembled, the idling noise should be relatively low periodical sounds from various moving parts.
If it is felt that the sound is abnormal, there may have been some error in the assembly process. In such a case, immediately stop the compressor, find out the cause of the abnormal noise, and resume the idling run after the cause has been removed.

■ Checking the lubrication inside the cylinder

Visually check the condition of lubrication inside each cylinder, by shining a flashlight inside as shown in the picture below. The ideal condition is when the internal surface of the cylinder is covered by an oil film of uniform thickness.

[POINT]

- In the case the cylinder sleeve or piston ring has been replaced, some oil droplet may come out from the cylinder as the sliding surface has not been well run in.
  If the amount of droplets is abnormally large, there is a possibility that the piston ring has been deformed due to an excess stress applied during the piston ring fitting work.
  In such a case, replacement of the piston ring is recommended as it may increase oil consumption.

■ Checking the operation of the suction/discharge valves and unloader

CAUTION

- **As the work is to be performed while the piston is moving, be very careful in conducting the operational check.**

Insert the discharge valve assembly into the discharge valve cage guide, and press it on. If you can hear a large compression sound, the suction valve of the cylinder should be operating normally.

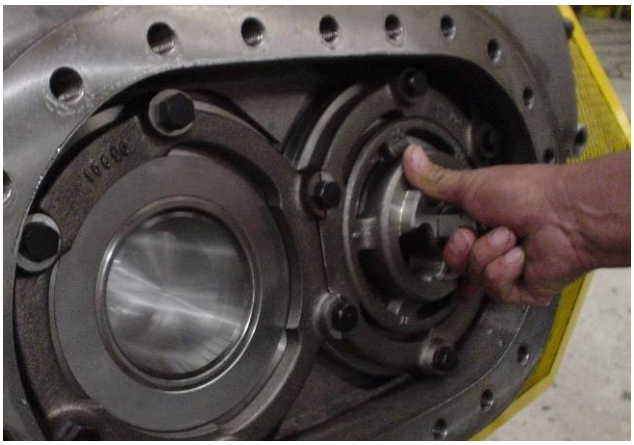

If the cylinder is equipped with an unloader mechanism, turn on the solenoid valve or open the manual valve to set it in the unloaded state while hearing the compression sound to make sure that the compression sound is gradually reduced.

When the compression sound has almost gone, turn off the solenoid valve or close the manual valve to check that the compression sound becomes gradually louder. If the level of the compression sound is decreased /increased when the valve is opened /closed, the unloader mechanism is operating normally.

After successfully completing all the above checking procedures, stop running the compressor and assemble the remaining parts.

WARNING

- **Before resuming the assembly work, be sure to shut off all power to the compressor, including the drive motor power, control power, and all other related power supplies to prevent accidental restart of the compressor.**

5.6.12 Head Cover

After completing the idling run check, assemble the discharge cage assembly head spring, and head cover.

a) Before inserting the discharge valve assembly into the discharge valve cage guide [74], check the normal operation of the discharge valve [110]. Push down the discharge valve using your thumbs as shown in the below left picture. If the valve moves up and down, it is operating normally.

If the discharge valve assembly has been disassembled, e.g., for parts replacement, reassemble the valve in the reverse order of the disassembly.

When installing the discharge valve spring [116], as in the case of the valve plate, put the larger diameter end first in the spring hole, and then twist it in the winding direction to press in the spring into the spring hole.

When tightening the first nuts [113] and second nuts [114], use the disassembly tool shown in the above right picture to tighten them with the specified torques.

b) After checking that the discharge valve operates normally, insert the discharge valve assembly into the discharge valve cage guide of the correct piston cylinder number.

c) Attach the head springs to each discharge valve assembly as shown in the below right picture.

CAUTION
● **In the case of 8-cylinder compressors, you should be careful in this process as the spring attached to the lowest position cylinder can easily drop, due to the tilt of the cylinder. Mounting the spring with its winding end placed at the upper part of the discharge valve cage mount prevents the spring from dropping.**

d) When installing the head cover ([49] for air cooled type / [50] for water cooled type), screw-in a stud bolt at the top center position, for safety purposes.

Stick the head cover gasket [51] by hanging it on the stud bolt. While being careful about the correct orientation, mount the head cover by passing the stud bolt through the top center bolt hole.

CAUTION
● **When installing the head covers, be sure to start the work from the lower cylinders because working on the upper cylinder first may cause foreign matters to get into the lower cylinder.**

e) Then, tighten the head cover fastening bolts [52].
Press down the head cover to some extent while the cover is pushed back by the head springs, insert two bolts at diagonally opposite positions, and manually screw them for about 2 turns.

After screwing the remaining bolts similarly to the first two bolts, remove the stud bolt and screw-in the last bolt. From this state, use a tool to fasten all the bolts one-by-one by alternately selecting opposite positions.

Lastly, tighten all bolts with the specified torque.

f) If the head jacket cover [53] has been removed from the water-cooled head cover [50], reinstall it onto the water-cooled head cover.

In this, be careful about the position of the MYCOM marking and correct orientation of the cooling water pipe.

Assemble the unit with the end of the center rib of the head cover (below left picture) facing the end of the center rib of the head jacket cover (below right picture).

In the case of the standard specification, the cooling water inlet/outlet side of the head jacket cover will face the oil pump side of the compressor.

5.6.13 Cooling Water Pipe

The braided high pressure hoses shall be attached along the cooling line, by selecting proper length of the hose. In the case of black braided high pressure hoses, brand-new hoses must be used for each overhaul.

a) Attach the braided high pressure hose to the hose nipple after passing it through the hose band. When connecting the braided high pressure hose to the hose nipple, be sure to push-in the hose end approximately 15 mm further than the last lock notch of the hose nipple as shown in the below left picture.

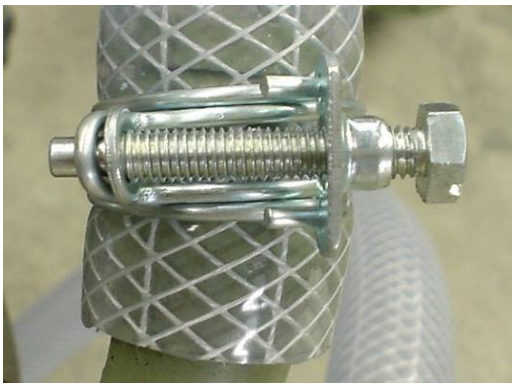

b) Tighten the braided high pressure hose by the hose band.
As shown in the above left picture, the hose nipple has three notches to prevent disengagement. Securely tighten the hose band after setting the position of the hose band such that the two wires of the hose band will bite into the two notches on the nipple.

If the hose has been removed together with the flange, such as the one at the head jacket cover, replace the gasket on the flange with a new gasket. Also, after fastening the flange, check that the hose band is securely tightened as shown in the above right picture.

CAUTION
● **If the hose band is not sufficiently tightened, it can not only cause cooling water leakage, but also lead to spraying out of the cooling water on the motor or control panel when the hose is disengaged, to lead to a failure of such electric systems. So, be careful to securely tighten the band. Also, regularly check the tightness of the hose bands.**

5.6.14 Final Inspection

Lastly, check the tightness of the fastening bolts of the head cover, hand hole cover, and other parts as well as the tightness of the pipe joints and plugs again, to complete the entire assembly work.

After the assembly work has been completed, use nitrogen gas to perform airtightness test of the compressor.

During the test, check that there are no leak from the gaskets, pipe joints, and plugs that have been worked on.

After the airtightness test has been completed, discharge the nitrogen gas in the compressor from the purge valve.

Then, after sufficiently evacuating the inside of the compressor by using a vacuum pump, open the stop valves of the compressor for connection to the cooling system. Note that the lubricant must be supplied during the evacuation process.

Chapter 6 Troubleshooting

Table 6-1 Troubleshooting

■ The motor does not start

Symptom	Possible cause	Result	Action to take
The motor won't start with hum-sound	Motor failure	Circuit breaker is opened. Motor burnt out	Inspection, repair, or replacement
	The belts tension is too high.	Circuit breaker is opened. Motor burnt out	Adjustment
	Voltage drop	Circuit breaker is opened. Motor burnt out	
	Failure or near-seizure of cylinder sleeve, piston, piston ring, or bearing metal (shaft seal), if the pulley cannot be turned by hand after removing the belts.	Motor burnt out. Seizure of sleeve, piston, and/or shaft seal	Inspection, repair, or replacement
	Poor or wrong wiring in the automatic control or (single phase) electrical system	Burn-out of parts in the automated system or others	Inspection and repair
No response when the magnet switch button is pressed	The circuit breaker is opened.	Inoperable	Inspection and replacement
	Contact failure of the magnet switch, or protection switch is left activated.	Inoperable	Inspection, repair, or replacement
	Broken wire	Inoperable	Inspection, repair, or replacement
	After activation of OP (reduced oil pressure protection device) or HP (high pressure protection device), it is left as it is or not reset.	Inoperable	Reset the device
The power turns on only when the magnet button is kept pressed	Wiring error (in the automatic control system)	Inoperable	Inspection and repair
	Contact failure of any auxiliary contact, etc.	Inoperable	Inspection, repair, or replacement
The motor stops soon after the startup	OP (reduced oil pressure protection device) has activated.	Inoperable Seizure of sliding surface of the compressor	
	(a) Insufficient amount of lubricant		(a) Supply oil
	(b) Oil pressure is too low		(b) Adjust the oil pressure

Symptom	Possible cause	Result	Action to take
The motor stops soon after the startup	HP (high pressure protection) has activated due to excessively high discharge pressure.	Motor burn-out or inoperable	
	(a) The condenser is full of non-condensing gas.		(a) Purge non-condensing gas
	(b) The suction pressure is too high.		(b) Reduce the load
	Due to liquid flow-back, the oil pressure cannot be increased, and OP has activated.	Inoperable	Inspection, repair, or operation adjustment. Replace the lubricant in the crank case, or supply warm oil after sucking the refrigerant in the crank case using another compressor.
	Wiring error between automatic control system and magnet switch	Burn-out of control system components	Inspection and repair
	Overload relay has activated, or the bimetal temperature of OP is high	Unable to startup	Wait until the bimetal is cooled down (about 5 minutes). In the case of OP, switch to manual operation to startup the motor, and switch back to automatic mode after 10 minutes. Note that the cause of the failure must be identified and corrected.

■ Abnormally high pressure

Symptom	Possible cause	Result	Action to take
The condenser is warmer than normal	The flow of the cooling water is insufficient, or the water temperature is too high.	Activation of HP or safety valve, and increased power consumption	Increase the amount of cooling water, or lower the water temperature.
Head cover is overheated	The flow of the cooling water is insufficient, or the cooling pipe is contaminated.	Activation of HP or safety valve, and increased power consumption	Adjust the amount of cooling water, or clean the cooling pipe.
Warm cooling water of the evaporator-condenser	Fan failure or clogging of spray nozzle or strainer	Reduced cooling capacity	Inspection, repair, or cleaning

Symptom	Possible cause	Result	Action to take
The top of the condenser is warm, but the bottom is not. In addition, the crank case can easily get frosted.	The refrigerant or lubricant has accumulated in the condenser to reduce the cooling area	Reduced cooling capacity	
	(a) Clogging between the condenser and receiver		(a) Inspection, adjustment, or removal of problem
	(b) Over charge of the refrigerant (refrigerant is contained in the condenser since the receiver is already full)		(b) Discharge the excess refrigerant.
The discharge pressure gauge shows some pressure and the condenser is somewhat warm.	(a) Air in the condenser, or failure of the discharge pressure gauge	Reduced cooling capacity	(a) Purge the air from the air purge valve.
	(b) The oil separator is full of lubricant, closing the path of the gas.		(b) Discharge the excess lubricant.

■ Discharge pressure is too low

Symptom	Possible cause	Result	Action to take
The liquid pipe is frosted and suction pressure becomes vacuum.	The liquid pipe or suction pipe is obstructed.	Reduced capacity	Valve adjustment, inspection, and cleaning
The crank case is frosted, and the head cover is also cold.	Wet compression due to excessive opening of the expansion valve (suction temperature is low due to liquid flow-back)	Liquid hammering may occur, and the discharge portion of the compressor may be damaged.	Narrow the opening of the expansion valve while running the compressor.
Suction pressure is low, and some hissing sound is heard from the expansion valve.	Insufficient amount of refrigerant	No cooling	Fill the refrigerant.
Suction pressure is high.	Gas leakage due to wear of the suction valve, discharge valve, or piston ring	Degraded capacity and baking of the sleeve	Inspection, repair, and/or replacement of the valve portion and piston rings

■ The suction pressure is too high

Symptom	Possible cause	Result	Action to take
Crankcase is frosted.	The opening of the expansion valve is too wide.	Liquid hammering occurs	Operational adjustment (Narrow the opening of the expansion valve.)
Increased current	Increased load	Motor burnt out	Operational adjustment
Discharge pressure is low. No frost on the suction side	Degraded performance of the compressor (possible crack in the suction/discharge valve line, etc.) or gas leakage from the safety valve	No cooling	Overhaul and parts replacement

■ Suction pressure is too low

Symptom	Possible cause	Result	Action to take
Cold room temperature or brine temperature is too high, compared with the level of suction pressure	Insufficient amount of refrigerant or too narrow opening of the expansion valve	No cooling	Charge the refrigerant or adjust the operational parameters
Liquid flow-back occurs when the expansion valve is opened	(a) Lubricant is contained in the cooling pipe. (b) Excessive formation of frost or ice on the cooling pipe	No cooling	(a) Discharge lubricant from the drain valve. (b) Remove the frost or ice.
Since the initial operation, the suction pressure has been too low for the cold room temperature or brine temperature.	The size of the cooling pipe and suction pipe is too small for the length or the resistance is too high.	No cooling	Investigate and improve any errors in the design or piping work
Suction pressure is lower than it was during the initial operation.	Clogging of the suction gas strainer		Cleaning

■ Abnormal noise during operation

Symptom	Possible cause	Result	Action to take
Generation of continuous metallic noise	(a) Existence of foreign matter in the compression block	Possible damage to the discharge and suction blocks	(a) Disassembly, repair, and/or replacement
	(b) Damaged discharge valve, suction valve, and/or piston ring		(b) Disassembly and replacement
High temperature in the shaft seal area	Wear, seizure, or damage of the metal	Possible damage in the compression block or bearing wear	Disassembly and replacement (note that the oil supply pipe may be clogged)
	Damaged oil pump	Possible wear	Stop operation, investigate the cause, and replace the part.
Crankcase is frosted.	Liquid flow-back	Damage in the discharge block and piston or bearing wear	Stop operation, investigate the cause, and replace parts. Narrow the opening of the expansion valve while the compressor is running. If it is very severe, first close the suction stop valve and gradually open it.
High discharge noise from the head cover	Oil hammering	Damage in the discharge block and/or piston	Prevent oil loss (if it occurs together with liquid flow-back, also apply the above measures).

■ Overheating of the crankcase

Symptom	Possible cause	Result	Action to take
Overheating of the head cover (when both the discharge pressure and suction pressure are high)	Increased compression ratio (Increased condenser temperature, increased refrigerant load)	Oil loss by burning and carbon attachment	Increase the amount of condenser cooling water or lower the water temperature
	Carbonization of lubricant due to increased discharge temperature, accumulation of carbide, and the resulting blocking of the path of the gas	Wear or damage of the metal or sleeve seizure	Disassembly, inspection, and cleaning or replacement
	Damaged discharge valve plate or gas leakage	Reduced cooling capacity	Disassembly, inspection, and replacement
	Gas leak from safety valve	Reduced cooling capacity	Decrease the discharge pressure or adjust the safety valve

Symptom	Possible cause	Result	Action to take
Increased oil temperature	Failure of oil cooler, insufficient lubricant, contamination of oil, or heating of pump due to clogging of oil filter	Increased wear due to decreased viscosity of oil	Clean oil cooler and increase cooling water. Replace lubricant. Clean the oil filter.
Impeded flow of the compressor jacket cooling water	Insufficient amount of cooling water or clogging in the water path	Wear or seizure of the metal and/or carbon attachment to the discharge block	Replace degraded lubricant, clean, and increase the cooling water.
The shaft seal part is especially hot	Imminent seizure of the sliding part	Seizure or damage of the sliding part	Repair or replacement

■ Excessive oil consumption

Symptom	Possible cause	Result	Action to take
Crankcase is easily frosted.	Lubricant foaming due to liquid flow-back Particularly frequent during negative pressure operation	Inoperable	Operational adjustment
No apparent abnormality is found	Closure of the pressure equalizing hole of the crankcase (or too wide opening in the case of negative pressure operation) or clogging of the suction strainer	Reduced oil pressure	Inspection/cleaning or cleaning of the strainer
	Piston ring wear		Replacement
	Cylinder sleeve wear		Replacement
	Improper fitting of the piston rings		Reassemble it correctly.
	Missing to attach the pressure equalizing pipe		Attach it properly.
	Wear of the unloader piston case		Replace the worn part or install a special unloader piston with rubber.
Head cover is overheated	When the discharge temperature is increased, the amount of oil vapor increases.	Carbon deposit	Adjust the operation parameters to lower the discharge temperature.
The bottom of the separator can be touched by hand	Clogging of the separator Failure of the float valve	Reduced oil pressure	Inspection and adjustment

Symptom	Possible cause	Result	Action to take
Oil level goes down after increased start/stop cycles.	Too frequent start/stop cycles	Low oil level	Reduce the number of start/stop cycles.
Oil level goes down when unloaded.	Phased unloading has not been performed (i.e., sudden unloading).	Foaming	Perform phased loading/unloading.

■ No cooling

Symptom	Possible cause	Action to take
Suction pressure does not go down.	Insufficient capacity	
	(a) Compressor	(a) Inspect the system. If it is found normal, add more capacity.
	(b) Condenser	(b) Inspect the system. If it is found normal, add more capacity.
	Increased load	If it is only a temporary increase, continue the operation. If it continues, add more capacity
	Insufficient thermal insulation or degradation	Review, reconstruct, and/or repair
	Abnormally high pressure	Reduce the discharge pressure (increase flow of cooling water, add condenser, clean condenser, air vent, etc.)
	Gas leakage	Inspection and repair
Suction pressure is low (with no frost on the suction pipe, and it easily causes liquid flow-back).	Overheated run (excessive closure of the expansion valve)	Adjust (open) the expansion valve.
	Insufficient length of the cooling pipe	Add capacity.
	Excessive frost on the cooling tube	Remove frost.
	Lubricant is contained in the cooling pipe.	Discharge the oil.
	Aperture of the suction line	Rework on the pipe system
Discharge pressure is high	Insufficient cooling water or increased water temperature	Increase the water flow.
	Insufficient capacity of the condenser	Add capacity.
	Contamination on the cooling surface of condenser	Cleaning
Discharge pressure is high (the bottom of the condenser is cold, the receiver is full).	Overcharging of the refrigerant	Remove excess refrigerant.
	Clogging in the discharge line pipe	Rework on the pipe system
Excessive oil loss (increased discharge temperature)	Piston ring wear	Replacement
	Galling	Inspection and repair
	Gas leakage	Inspection and repair

Chapter 7 Related Documents

7.1 Development View of Parts

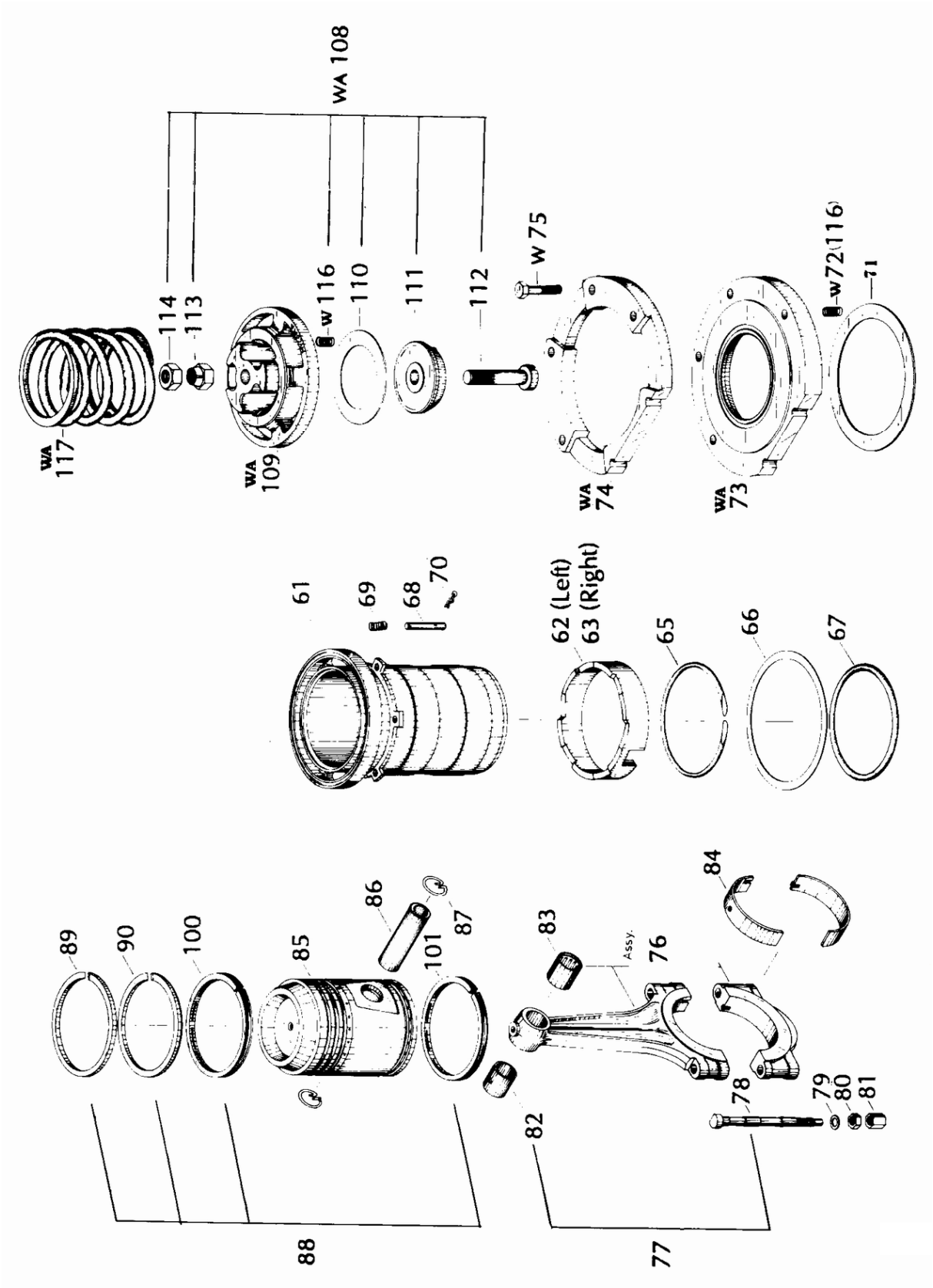

Figure 7-1 Development View of Parts Around the WA-type Cylinder

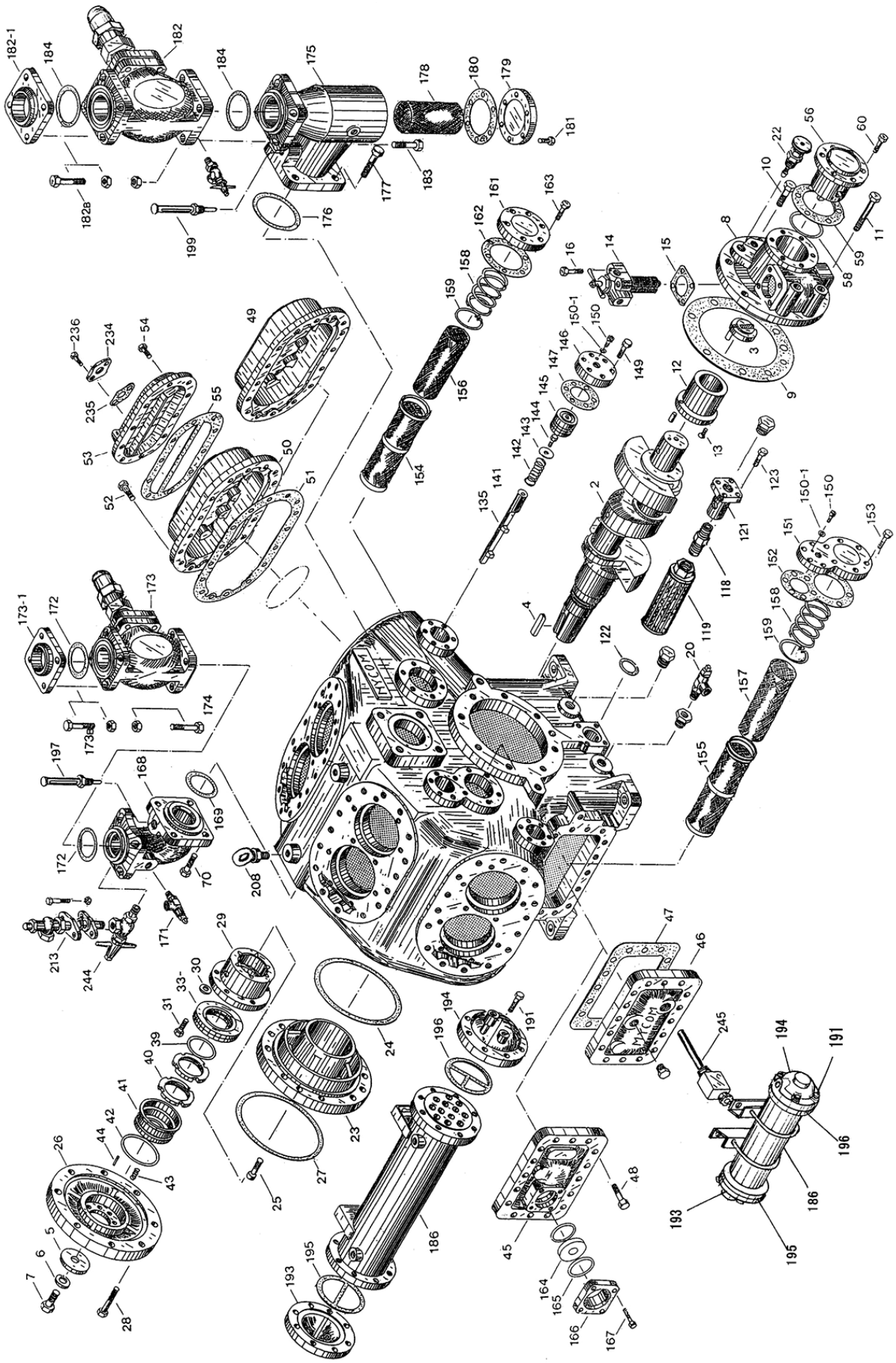

Figure 7-2 Development View of the Entire WA-type (8WA) Compressor

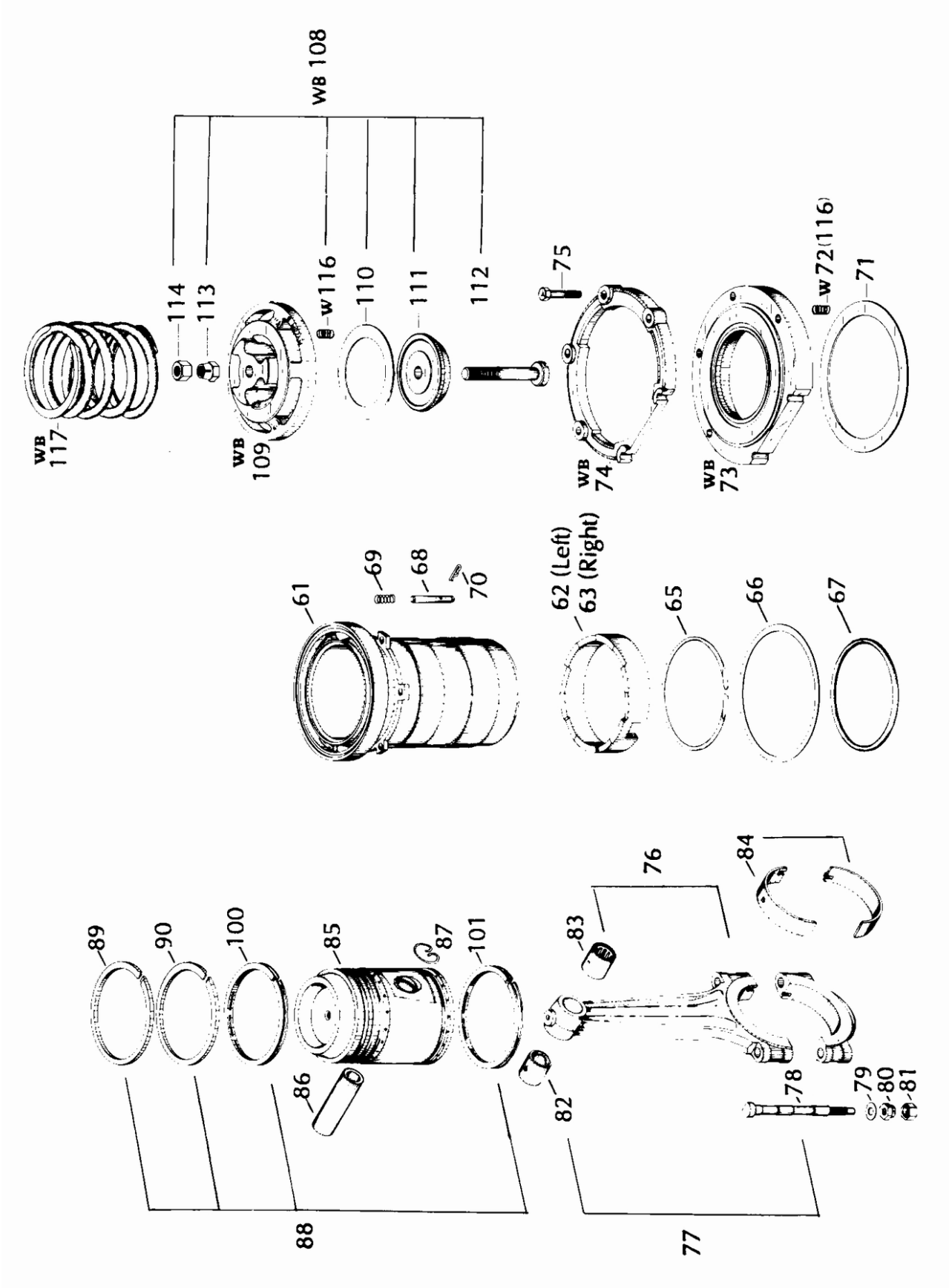

Figure 7-3 Development View of Parts Around the WB-type Cylinder

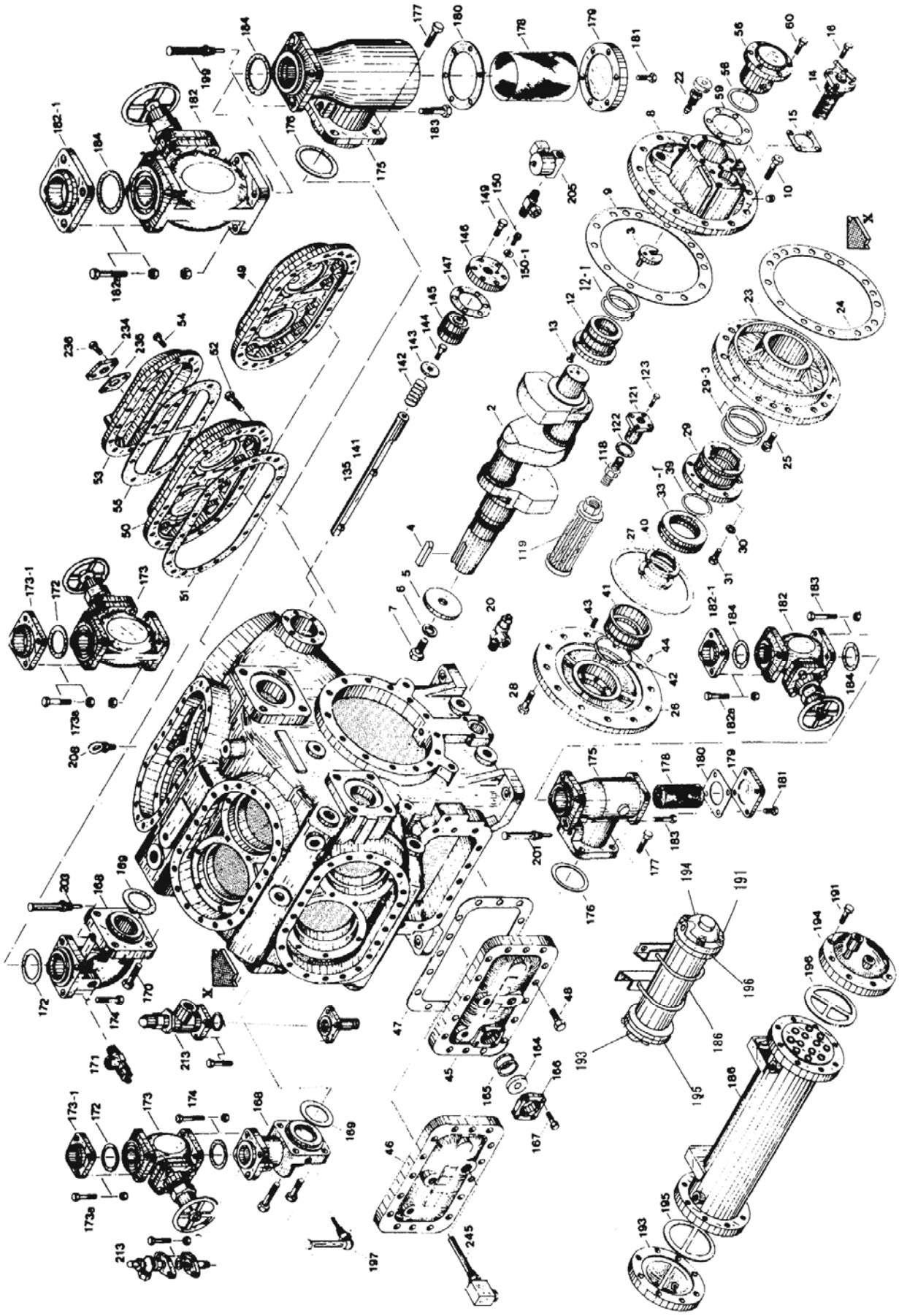

Figure 7-4 Development View of the Entire WB-type (62WB) Compressor

7.2 Parts Configuration Table

Table 7-1 Parts for WA-type Compressors

No.	Name	Item Code	Remarks	Qty					
				2	4	6	8	42	62
1	Crankcase	CR00100-A02	2A/2WA (for metric system)	1	-	-	-	-	-
1	Crankcase	CR00100-A04	4A/4WA (for metric system)	-	1	-	-	-	-
1	Crankcase	CR00100-A06	6A/6WA (for metric system)	-	-	1	-	-	-
1	Crankcase	CR00100-A08	8A/8WA (for metric system)	-	-	-	1	-	-
1	Crankcase	CR00100-A042	42A/42WA (for metric system)	-	-	-	-	1	-
1	Crankcase	CR00100-A062	62A/62WA (for metric system)	-	-	-	-	-	1
2	Crankshaft	CR00209-ALA02	AL 2A/2WA	1	-	-	-	-	-
2	Type BB Crankshaft	CR00209-BBA02	BB 2A/2WA	1	-	-	-	-	-
2	Type BB Crankshaft	CR00209-ALA04	AL 4A/4WA/4J	-	1	-	-	-	-
2	Type BB Crankshaft	CR00209-BBA04	BB 4A/4WA/4J	-	1	-	-	-	-
2	Crankshaft	CR00209-ALA06	AL 6A/6WA/42A/42WA/6J	-	-	1	-	1	-
2	Type BB Crankshaft	CR00209-BBA06	BB 6A/6WA/42WA/6J	-	-	1	-	1	-
2	Crankshaft	CR00209-ALA08	AL 8A/8WA/62A/62WA/8J	-	-	-	1	-	1
2	Type BB Crankshaft	CR00209-BBA08	BB 8A/8WA/62A/62WA/8J	-	-	-	1	-	1
3	Drag Crank	CR00300-AB	A, WA, B, WB	1	1	1	1	1	1
4	Pulley Key	CR00400-A	12.7×12.4×85 (rounded at one end)	1	1	1	1	1	1
5	Pulley Flat Washer	CR00500-ASF	75	1	1	1	1	1	1
6	Pulley Lock Washer	CR00600-AB	A, WA, B, WB M27	1	1	1	1	1	1
7	Pulley Set Bolt	CR00700-AB	M27×50 (P=1.5)	1	1	1	1	1	1
8	Main Bearing Head	CR00800-MA	AM	1	1	1	1	1	1
9	Gasket, Main Bearing Head	CR00900-AN		1	1	1	1	1	1
10	Main Bearing Head Fastening Bolt	NB14012-040	M12×40	6	6	6	6	6	6
11	Main Bearing Head Fastening Bolt	NB14012-120	M12×120	2	2	2	2	2	2
12	Main Bearing	CR01200-A	A, WA	1	1	1	1	1	1
13	Main Bearing Screw	NA22505-020	M5×20 (Countersunk screw)	1	1	1	1	1	1
14	CUNO Filter Assembly	CR0149-AJ	A, WA, J	1	1	1	1	1	1
15	Gasket, CUNO Filter Cover	CR01500-AN	A, WA	1	1	1	1	1	1
16	CUNO Filter Cover Fastening Bolt	NBS14010-30	M10×30 P=1.5 (small head)	4	4	4	4	4	8
20	Oil Supply and Discharge Valve	NF063-0303	JO valve 3/8×3/8	1	1	1	1	1	1
22	Oil Pressure Control Valve Assembly	NL152-SFX	Round handle type	1	1	1	1	1	1
23	Bearing Head	CR02300-MA	AM (for metric system)	1	1	1	1	1	1
23	Type BB Bearing Head	CR02300-MAB	AM, BB (for metric system)	1	1	1	1	1	1

No.	Name	Item Code	Remarks	Qty					
				2	4	6	8	42	62
24	Gasket, Bearing Head	CR02700-AN		1	1	1	1	1	1
25	Bearing Head Fastening Bolt	NB35412-030	M12×30 Hexagon Socket Head Cap Screw	4	4	4	4	4	4
26	Cover Plate	CR02600-A	A, WA	1	1	1	1	1	1
27	Gasket, Cover Plate	CR02700-AN		1	1	1	1	1	1
28	Cover Plate Fastening Bolt	NB14012-080	M12×80	8	8	8	8	8	8
29	Thrust Bearing	CR02900-A		1	1	1	1	1	1
29	Type BB Thrust Bearing	CR02900-ABBME		1	1	1	1	1	1
29	Thrust Ball Bearing	CR70800-A	51118 A (NH3)	1	1	1	1	1	1
29	Thrust Roller Bearing	CR70900-A		1	1	1	1	1	1
30	Washer for Thrust Bearing Fastening Bolt	CR03000-AB	For M10 (small round washer)	6	6	6	6	6	6
31	Thrust Bearing Fastening Bolt	NB14010-030	M10×30	6	6	6	6	6	6
32	Mechanical Seal Assembly	CR03209-NA	A (NH3) (HNBR)	1	1	1	1	1	1
32	Mechanical Seal Assembly	CR03209-WA	WA (HNBR)	1	1	1	1	1	1
33	Double Seal Collar	CR0339-FA	A, WA (Freon) with O-ring	1	1	1	1	1	1
33	Seal Collar	CR0339-NA	A (NH3) with O-ring	1	1	1	1	1	1
33	Double Seal Collar	CR0339-WA	WA with O-ring	1	1	1	1	1	1
34	Double Seal Collar Fixing Ring	-		1	1	1	1	1	1
35	Double Seal Collar Floating Seat	-		1	1	1	1	1	1
36	Double Seal Collar Drive Pin	-	φ4×12 (alignment pin)	1	1	1	1	1	1
37	O-ring for Double Seal Collar	PC61-045	AS568A 342 FKM	1	1	1	1	1	1
37	O-ring for Double Seal Collar	PA61-045	AS568A 342 NBR	1	1	1	1	1	1
38	Double Seal Collar Spring	CR03800-AB		6	6	6	6	6	6
38	Double Seal Collar Spring Set	CR0389-A	A, WA	1	1	1	1	1	1
39	O-ring for Shaft Seal Collar	PC61-039	AS568A 336 FKM	1	1	1	1	1	1
39	O-ring for Shaft Seal Collar	PA61-039	AS568A 336 NBR	1	1	1	1	1	1
40	Lock Nut	CR04000-A	M70 (P=1)	2	2	2	2	2	2
41	Shaft Seal Ring	CR04100-A	A, WA	1	1	1	1	1	1
42	O-ring for Shaft Seal Ring	PC61-046	AS568A 343 FKM	1	1	1	1	1	1
42	O-ring for Shaft Seal Ring	PA61-046	AS568A 343 NBR	1	1	1	1	1	1
43	Helical Spring	CR04300-A	A, WA	12	12	12	12	12	12
43	Helical Spring Set	CR0439-FA	A, WA (Freon)	1	1	1	1	1	1
43	Helical Spring Set	CR0439-NA	A, WA (NH3)	1	1	1	1	1	1
44	Spring Pin (roll pin)	NE3203-010	φ3×10 (alignment pin)	1	1	1	1	1	1
-	Locking Ball	-	φ3/16	-	1	1	1	1	1

No.	Name	Item Code	Remarks	Qty					
				2	4	6	8	42	62
45	Hand Hole Cover (with window)	CR0459-A01	A, WA with Gasket	-	1	1	1	1	1
46	Hand Hole Cover (without window/with hole)	CR0459-A02	A, WA with Gasket	-	1	1	1	1	1
46	Hand Hole Cover (without window/without hole)	CR0459-A03	A, WA with Gasket	-	1	1	1	1	1
46	Hand Hole Cover (without window) 2A	CR0459-A2	2A with Gasket	1	-	-	-	-	-
47	Gasket, Hand Hole Cover	CR04700-AN		1	2	2	2	2	2
48	Hand Hole Cover Fastening Bolt	NB14012-040	M12×40	14	32	32	32	32	32
49	Head Cover (air cooled) A	CR0499-AA	A with Gasket	1	2	3	4	3	4
49	Head Cover (air cooled) WA	CR0499-WAA	WA with Gasket	1	2	3	4	3	4
50	Head Cover (water cooled)	CR0499-AW	A with Gasket	1	2	3	4	3	4
50	Head Cover (water cooled)	CR0499-WAW	WA with Gasket	1	2	3	4	3	4
50	Head Cover (water cooled) Assembly	CR0509-WA1	WA MYCOM1	1	2	3	4	3	4
50	Head Cover (water cooled) Assembly	CR0509-WA2	WA MYCOM2	1	2	3	4	3	4
50	Head Cover (sea water) Assembly	CR0509-WAK1	WA MYCOM1	1	2	3	4	3	4
50	Head Cover (sea water) Assembly	CR0509-WAK2	WA MYCOM2	1	2	3	4	3	4
50	Head Cover (refrigerant) Assembly	CR0509-WAR1	WA MYCOM1	1	2	3	4	3	4
50	Head Cover (refrigerant) Assembly	CR0509-WAR2	WA MYCOM2	1	2	3	4	3	4
51	Gasket, Head Cover	CR05100-AN		1	2	3	4	3	4
52	Head Cover Fastening Bolt, WA	NB15512-040	WA M12×40	16	32	48	64	48	64
53	Head Cover Fastening Bolt, A	NB15512-055S	A M12×55	16	32	48	64	48	64
53	Head Jacket Cover (water cooled)	CR0539-WA1	WA MYCOM1 with Gasket	1	2	3	4	3	4
53	Head Jacket Cover (water cooled)	CR0539-WA2	WA MYCOM2 with Gasket	1	2	3	4	3	4
53	Head Jacket Cover (sea water)	CR0539-WAK1	WA MYCOM1 with Gasket	1	2	3	4	3	4
53	Head Jacket Cover (sea water)	CR0539-WAK2	WA MYCOM2 with Gasket	1	2	3	4	3	4
54	Head Jacket Cover Fastening Bolt	NB17010-025	M10×25	10	20	30	40	30	40
55	Gasket, Head Jacket Cover (water cooled)	CR05500-WAW		1	2	3	4	3	4
-	Water Cooled Head Cover, Zinc ZAP	CR85400-WA	WA	1	2	3	4	3	4
-	Gasket, Water Cooled Head Cover, Zinc ZAP	CR85500-WA	WA	1	2	3	4	3	4
55	Gasket, Head Jacket Cover (refrigerant)	CR05500-WAR		-	2	3	4	3	4
56	Oil Pump A	CR0569-AVS	Standard for A /WA (800 to 1450 min^{-1})	1	1	1	1	1	1
58	O-ring for Oil Pump	PC61-041	AS568A 338 FKM	1	1	1	1	1	1
58	O-ring for Oil Pump	PA61-041	AS568A 338 NBR	1	1	1	1	1	1
59	Gasket, Oil Pump	CR05900-AN		1	1	1	1	1	1

No.	Name	Item Code	Remarks	Qty					
				2	4	6	8	42	62
60	Oil Pump Fastening Bolt	NBS14010-30	M10×30 (small head)	6	6	6	6	6	8
61	Cylinder Sleeve A	CR0619-A2	A, WA with Gasket	2	4	6	8	6	6
61	Cylinder Sleeve Assembly Left	CR0619-ZAL	A, WA with Gasket,	-	-	2	2	2	2
61	Cylinder Sleeve Assembly Right	CR0619-ZAR	A, WA with Gasket,	2	2	2	4	2	-
62	Cam Ring (left down)	CR06200-AL		-	-	2	2	2	6
63	Cam Ring (right down)	CR06200-AR		1	2	2	4	2	-
65	Retaining Ring	CR06500-A	A, WA	1	2	4	6	4	6
66	Gasket, Cylinder Sleeve	CR06600-A	A, WA	2	4	6	8	6	8
67	O-ring for Cylinder Sleeve	PC61-050	AS568A 347 FKM	-	-	-	-	2	2
67	O-ring for Cylinder Sleeve	PA61-050	AS568A 347 NBR	-	-	-	-	2	2
68	Lift Pin	CR06800-A	A, WA	6	12	24	36	24	36
69	Lift Pin Spring	CR06900-A	A, WA	6	12	24	36	24	36
70	Split Cotter Pin for Lift Pin	CR07000-AB	A, WA, B, WB E4	6	12	24	36	24	36
71	Suction Valve	CR07100-A	A, WA	2	4	6	8	6	8
-	Suction Valve Assembly	CR0719-NA	A,WA (NH3)	2	4	6	8	6	8
71	Suction Valve Assembly	CR0719-FA	A, WA (Freon)	2	4	6	8	6	8
72	Suction Valve Spring	CR07200-AB	A, B	12	24	36	48	48	48
72	Suction Valve Spring	CR07200-AB	For low-stage: Type II	-	-	-	-	36	36
72	Suction Valve Spring	CR11600-AB4	For high-stage: Type IV (chrome plated)	12	24	36	48	12	12
-	Suction Valve Spring Set	CR0729-A2	For low-stage: Type II	-	-	-	-	1	1
-	Suction Valve Spring Set	CR0729-WA4	For high-stage: Type IV (chrome plated)	1	1	1	1	1	1
73	Valve Plate A/NH3	CR07300-NA	A (NH3) single stage/two stage machines	2	4	6	8	6	8
73	Valve Plate A/R	CR07300-FA	A (Freon) single stage machine/high-stage of two stage machine	2	4	6	8	2	2
73	Valve Plate	CR07300-NA	A (Freon) single stage machine/low-stage of two stage machine	-	-	-	-	4	6
73	Valve Plate WA/NH3	CR07300-NWA	WA (NH3) single stage machine/high-stage of two stage machine	2	4	6	8	2	2
73	Valve Plate WA/R	CR07300-FWA	WA (Freon) single stage machine/high-stage of two stage machine	2	4	6	8	2	2
73	Valve Plate	CR07300-NA	WA (NH3, Freon) low-stage of two stage machine	-	-	-	-	4	6
74	Discharge Cage Guide	CR07400-A	A	2	4	6	8	6	8
74	Discharge Cage Guide	CR07400-WA	WA	2	4	6	8	6	8
75	Discharge Cage Guide Fastening Bolt A	NB14010-050	A M10×50 (P=1.0)	10	20	30	40	30	40
75	Discharge Cage Guide Fastening Bolt WA	NB15510-045P1	WA M10×45 (P=1.0)	10	20	30	40	30	40

No.	Name	Item Code	Remarks	Qty					
				2	4	6	8	42	62
76	Connecting Rod (for high-stage)	CR07600-AN	A, WA needle	-	-	-	-	2	2
77	Connecting Rod (for low-stage)	CR07600-AM	A, WA bushing	2	4	6	8	4	6
78	Crank Pin Fastening Bolt	CR07800-A	A, WA	4	8	12	16	12	16
78	Crank Pin Fastening Bolt Set	CR0789-A	A, WA	4	8	12	16	12	16
79	Washer for Crank Pin Fastening Bolt	CR07900-A	A, WA	4	8	12	16	12	16
80	First Nut, Crank Pin Fastening	CR08000-A1	A, WA	4	8	12	16	12	16
81	Second Nut, Crank Pin Fastening	CR08000-A2	A, WA	4	8	12	16	12	16
82	Connecting Rod Bushing	CR08200-AF	A, WA AP8-2F low-stage	2	4	6	8	6	6
83	Connecting Rod Bushing (needle bearing)	CR08300-A	A, WA TA25 high-stage	-	-	-	-	2	2
84	Bearing Halves (top/bottom set)	CR0849-A	A, WA	2	4	6	8	6	8
84	Bearing Halves (top/bottom set)	CR0849-A05	A, WA 0.5 mm	2	4	6	8	6	8
84	Bearing Halves (top/bottom set)	CR0849-A10	A, WA 1.0 mm	2	4	6	8	6	8
85	Piston	CR08500-ALAMH	A, WA AL	2	4	6	8	6	8
86	Piston Pin	CR08600-A	A, WA	2	4	6	8	6	8
87	Piston Pin Lock Spring	CR08700-A	A, WA	4	8	12	16	12	16
-	Piston Pin Lock Spring Set	CR0879-A	A, WA	2	4	6	8	6	8
88	Piston Ring Set	CR0899-FA	A (Freon), J	2	4	6	8	6	8
88	Piston Ring Set	CR0899-NA1	A (NH3)	2	4	6	8	-	-
88	Piston Ring Set	CR0899-NA2	A (NH3) two stage machine	-	-	-	-	6	8
88	Piston Ring Set	CR0899-WA1	WA	2	4	6	8	6	8
88	Piston Ring Set	CR0899-WA2	WA (Propane)	2	4	6	8	6	8
89	Piston Ring (A, FC-PC-BFG1)	CR08900-AFCBFG1	1st	2	4	6	8	6	8
90	Piston Ring (A, FC-P)	CR08900-AFCP	2nd	2	4	6	8	6	8
100	Piston Ring (A, FC-PC-BC3P)	CR08900-AFCBC3P	3rd	2	4	6	8	6	8
101	Piston Ring (A, FC-PC-BC3)	CR08900-AFCBC3	4th	2	4	6	8	6	8
-	Piston Ring (A, FC-UC)	CR08900-AFCUC	A single stage, (Freon) two stage machine	2	4	6	8	6	8
-	Piston Ring (A, GA-P)	CR08900-AGAP	A (NH3)	2	4	6	8	6	8
-	Piston Ring (A, GA-UC)	CR08900-AGAUC		-	-	-	-	-	-
108	Discharge Valve Assembly	CR10800-ACN	A (NH3) low-stage	-	-	-	-	4	6
108	Discharge Valve Assembly	CR10800-ASR	A (Freon) low-stage	-	-	-	-	4	6
108	Discharge Valve Assembly	CR10800-WACN	WA (NH3) single stage/high-stage	2	4	6	8	2	2
108	Discharge Valve Assembly	CR10800-WACR	WA (Freon) single stage/high-stage	2	4	6	8	2	2
109	Discharge Valve Cage	CR10900-ACN	A (NH3) low-stage	-	-	-	-	4	6
109	Discharge Valve Cage	CR10900-ASR	A (Freon) low-stage	-	-	-	-	4	6

No.	Name	Item Code	Remarks	Qty					
				2	4	6	8	42	62
109	Discharge Valve Cage	CR10900-WACN	WA (NH3) single stage/high-stage	2	4	6	8	2	2
109	Discharge Valve Cage	CR10900-WACR	WA (Freon) single stage/high-stage	2	4	6	8	2	2
110	Discharge Valve	CR11000-A	A, WA	2	4	6	8	6	8
111	Discharge Valve Seat	CR11100-A	A, WA	2	4	6	8	6	8
112	Discharge Valve Fastening Bolt	CR11200-A	A, WA	2	4	6	8	6	8
-	Discharge valve fastening Bolt Set	CR1129-A	A, WA	2	4	6	8	6	8
113	First Nut, Discharge Valve Fastening	CR08000-B1		2	4	6	8	6	8
114	Second Nut, Discharge Valve Fastening	CR08000-B2		2	4	6	8	6	8
116	Discharge Valve Spring	CR11600-A1	Type A: Type 1 (up to May 1972)	12	24	36	48	36	48
116	Discharge Valve Spring	CR11600-AB3	Type A: Type 3 (after Dec. 1974)	14	28	42	56	42	56
116	Discharge Valve Spring	CR11600-AB3	Type WA: Type 3 low-stage	-	-	-	-	32	48
116	Discharge Valve Spring	CR11600-AB4	Type WA: Type 4 single stage/high-stage	16	32	48	64	16	16
-	Discharge Valve Spring Set	CR1169-A3	Type A: Type 3	2	4	6	8	6	8
-	Discharge Valve Spring Set	CR1169-A3	Type WA: Type 3 low-stage	-	-	-	-	4	6
-	Discharge Valve Spring Set	CR1169-WA4	Type WA: Type 4 single stage/high-stage	2	4	6	8	2	2
-	Discharge Valve Spring Set	CR1169-A1	Type A: Type 1	2	4	6	8	6	8
117	Head Spring	CR11700-A	A	2	4	6	8	6	8
117	Head Spring	CR11700-WA	WA	2	4	6	8	6	8
118	Oil Strainer Holder	CR11800-A		1	1	1	1	1	1
119	Oil Strainer Element	CR11900-A		1	1	1	1	1	1
121	Oil Strainer Cover	CR12100-A	A, WA with hole	1	1	1	1	1	1
121	Oil Strainer Cover	CR12100-A01	A, WA without hole	1	1	1	1	1	1
122	Gasket, Oil Strainer Cover	CR12200-AN	A, WA	1	1	1	1	1	1
123	Oil Strainer Cover Fastening Bolt	NBS14010-30	M10×30 (small head)	4	4	4	4	4	4
-	Oil Strainer Assembly with Gasket	CR1239-A	A, WA with gasket	1	1	1	1	1	1
135 /141	Push Rod, Unloader Slide Valve (4A1)	CR13500-A041	4A/4WA -1	-	1	-	-	-	-
135 /141	Push Rod, Unloader Slide Valve (6A1)	CR13500-A061	6A/6WA -1	-	-	1	-	-	-
135 /141	Push Rod, Unloader Slide Valve (6A2)	CR13500-A062	6A/6WA -2	-	-	1	-	1	-
135 /141	Push Rod, Unloader Slide Valve (6A3)	CR13500-A063	6A/6WA -3	-	-	-	-	1	-
135 /141	Push Rod, Unloader Slide Valve (8A1)	CR13500-A081	8A/8WA -1	-	-	-	1	-	-
135 /141	Push Rod, Unloader Slide Valve (8A2)	CR13500-A082	8A/8WA -2	1	-	-	1	-	-
135 /141	Push Rod, Unloader Slide Valve (8A3)	CR13500-A083	8A/8WA -3	-	-	-	1	-	2

No.	Name	Item Code	Remarks	Qty					
				2	4	6	8	42	62
135 /141	Push Rod, Unloader Slide Valve (8A4)	CR13500-A084	8A/8WA -4	-	-	-	-	-	1
142	Unloader Device Spring	CR14200-A	A, WA	1	1	2	3	2	3
143	Push Rod Washer	CR14300-A	A, WA/ 32*10*3	1	1	2	3	2	3
144	Push Rod Fastening Bolt	NB12010-020	M10×20 (small head)	1	1	2	3	2	3
145	Unloader Piston	CR14500-FCA		1	1	2	3	2	3
146	Unloader Piston Cover	CR14600-A	A, WA	1	1	2	2	2	3
147	Gasket, Unloader Piston Cover	CR14700-AN	A, WA	1	1	2	2	2	3
149	Unloader Piston Cover Fastening Bolt	NB14010-035	M10×35	6	6	12	18	12	18
150	Hexagon Socket Head Cap Screw, Unloader Piston Cover	NB3541/4-015	W1/4×15	1	1	2	3	2	3
150-1	Washer, Hexagon Socket Head Cap Screw	ND113-065		1	1	2	3	2	3
151	Unloader Piston and Suction Cover	CR15100-A08	8A/8WA	-	-	-	1	-	-
152	Gasket, Unloader Piston and Suction Cover	CR15200-A08N	8A/8WA	-	-	-	1	-	-
153	Unloader Piston and Suction Cover Fastening Bolt	NB14010-035	M10×35	-	-	-	1	-	-
154	Suction Strainer	CR15400-A02	2A/2WA	1	-	-	-	-	-
154	Suction Strainer	CR15401-A04	4A/4WA/6A/6WA	-	1	2	-	1	-
154	Suction Strainer, 8A long	CR15401-A08L	8A/8WA (long)	-	-	-	1	-	-
154	Suction Strainer, 8A short	CR15401-A08S	8A/8WA (short)	-	-	-	1	-	-
156	Suction Strainer Canvas	CR15600-A	A, WA	-	1	2	2	1	-
156	Suction Strainer Canvas	CR1500-A2	2A/2WA	1	-	-	-	-	-
158	Suction Strainer Holding Spring	CR15800-A	A, WA	-	1	2	1	1	-
158	Suction Strainer Holding Spring	CR15800-A02	2A/2WA	1	-	-	-	-	-
158	Suction Strainer Holding Spring	CR15800-A08S	8A/8WA short	-	-	-	1	-	-
159	Suction Strainer Lock Spring	CR15900-A	A, WA	-	1	2	2	1	-
159	Suction Strainer Lock Spring 2A	CR15900-A02	2A/2WA	1	-	-	-	-	-
160	Suction Strainer Holding Hardware 42A	CR16000-A42	42A/42WA	-	-	-	-	1	-
161	Suction End Cover A	CR16100-A	A, WA	-	1	2	1	-	-
161	Suction End Cover 2A	CR16100-A02	2A/2WA	1	-	-	-	-	-
162	Gasket, Suction End Cover A	CR16200-AN	A, WA	-	1	2	1	-	-
162	Gasket, Suction End Cover 2A	CR16200-A02N	2A/2WA	1	-	-	-	-	-
163	Suction End Cover Fastening Bolt	NB14010-035	M10×35	4	6	6	6	-	-
164	Oil Sight Glass	CR16400-AB	70D A, WA, B, WB	1	1	1	1	1	1
165	O-ring for Oil Sight Glass	PA61-035	AS568A 332 NBR	2	2	2	2	2	2
165	O-ring for Oil Sight Glass	PC61-035	AS568A 332 FKM	2	2	2	2	2	2

No.	Name	Item Code	Remarks	Qty					
				2	4	6	8	42	62
166	Oil Sight Gland	CR16600-AB	70D 3/8	1	1	1	1	1	1
167	Oil Sight Gland Fastening Bolt	NBS14010-30	M10×30 (small head)	4	4	4	4	4	4
168	Discharge Elbow	CR16800-A04	4AE1 low-stage discharge	-	-	-	-	1	1
168	Discharge Elbow	CR16800-A06	6AE1 (NH3, Freon)	-	-	1	-	-	-
168	Discharge Elbow	CR16800-A08	8AE1 (NH3)	-	-	-	1	-	-
168	Discharge Elbow	CR16800-A082	8AE2 (Freon)	-	-	-	1	-	-
168	Discharge Elbow	CR16800-A062	62AE1 high-stage discharge	-	-	-	-	1	1
-	Suction Elbow (high-stage suction)	CR16800-A062H	62AE1, hole	-	-	-	-	1	1
-	Suction Elbow Fastening Bolt	NB14012-050	M12×50 high-stage	-	-	-	-	2	2
-	Suction Elbow Fastening Bolt	NB14012-080	M12×80 high-stage	-	-	-	-	2	2
-	Tooth Washer, Suction Elbow Fastening	ND422-12	M12 high stage suction	-	-	-	-	4	4
168	Discharge Elbow (low-stage discharge)	CR16800-AN04	Domestic land use, 4AE1N (NH3)	-	-	-	-	1	1
168	Discharge Elbow	CR16800-AN06	Domestic land use, 6AE1N (NH3)	-	-	1	-	-	-
168	Discharge Elbow	CR16800-AN08	Domestic land use, 8AE1N (NH3)	-	-	-	1	-	-
168	Discharge Elbow	CR16800-AN082	Domestic land use, 8AE2N (NH3)	-	-	-	1	-	-
168	Discharge Elbow (high-stage discharge)	CR16800-AN062	Domestic land use, 62AE1N (NH3)	-	-	-	-	1	1
168	Suction Elbow (high-stage suction)	CR16800-AN062	Domestic land use, 62AE1N (NH3)	-	-	-	-	1	1
169	Gasket, Discharge Elbow	CR72000-040N	Body side, 40A	-	-	-	-	1	1
169	Gasket, Discharge Elbow	CR72000-065N	Body side, 65A	-	-	1	1	1	1
169	Gasket, Discharge Elbow	CR72000-080N	Body side, 80A	-	-	-	1	-	-
170	Discharge Elbow Fastening Bolt	NB14012-050	M12×50 high-stage	-	-	-	-	2	2
170	Discharge Elbow Fastening Bolt	NB14016-080	M16×80 high-stage	-	-	-	-	2	2
170	Discharge Elbow Fastening Bolt	NB14016-055	M16×55 low-stage	-	-	4	-	4	4
170	Discharge Elbow Fastening Bolt	NB14020-060	M20×60	-	-	-	4	-	-
-	Tooth Washer, Discharge Elbow Fastening	ND422-12	High-stage discharge, for M12	-	-	-	-	2	2
-	Tooth Washer, Discharge Elbow Fastening	ND422-16	Low-stage discharge, for M16	-	-	4	-	6	6
-	Tooth Washer, Discharge Elbow Fastening	ND422-20	For M20	-	-	-	4	-	-
171	Service Valve	NF063-0303	JO valve 3/8×3/8	1	1	1	1	1	1
172	Gasket, Discharge	CR72000-040N	MYCOM flange G 40A	1	-	-	-	1	1
172	Gasket, Discharge	CR72000-050N	MYCOM flange G 50A	-	1	-	-	1	1
172	Gasket, Discharge	CR72000-065N	MYCOM flange G 65A	-	-	1	1	-	-

No.	Name	Item Code	Remarks	Qty					
				2	4	6	8	42	62
172	Gasket, Discharge	CR72000-080N	MYCOM flange G 80A	-	-	-	1	-	-
173	Discharge Stop Valve	CR72300-W040	MYK GVF ASSY W 40A	1	-	-	-	1	1
173	Discharge Stop Valve	CR72300-W050	MYK GVF ASSY W 50A	-	1	-	-	1	1
173	Discharge Stop Valve	CR72300-W065	MYK GVF ASSY W 65A	-	-	1	1	-	-
173	Discharge Stop Valve	CR72300-W080	MYK GVF ASSY W 80A	-	-	-	1	-	-
175	Scale Trap	CR17500-A04	4AT1 low-stage suction	-	-	-	-	1	-
175	Scale Trap	CR17500-A061	6AT1 (NH3)	-	-	1	-	-	1
175	Scale Trap	CR17500-A062	6AT2 (Freon)	-	-	1	-	-	-
175	Scale Trap	CR17500-A081	8AT1 (NH3)	-	-	-	1	-	-
175	Scale Trap	CR17500-A082	8AT2 (Freon)	-	-	-	1	-	-
176	Gasket, Scale Trap Centering Location	CR18200-K040	Body side, 40A	-	-	-	-	-	1
176	Gasket, Scale Trap Centering Location	CR18200-K050	Body side, 50A	-	-	-	-	1	-
176	Gasket, Scale Trap Centering Location	CR18200-K065	Body side, 65A	-	-	-	-	1	-
176	Gasket, Scale Trap Centering Location	CR18200-K080	Body side, 80A	-	-	1	-	-	1
176	Gasket, Scale Trap Centering Location	CR18200-K100	Body side, 100A	-	-	-	1	-	-
177	Scale Trap Fastening Bolt	NB14012-050	M12×50	-	-	-	-	2	-
177	Scale Trap Fastening Bolt	NB14012-080	M12×80	-	-	-	-	2	-
177	Scale Trap Fastening Bolt	NB14016-055	M16 × 55 low-stage suction	-	-	-	-	4	-
177	Scale Trap Fastening Bolt	NB14020-060	M20×60	-	-	4	4	-	4
177	Tooth Washer, Scale Trap Fastening	ND422-12	M12 high-stage suction	-	-	-	-	4	4
177	Tooth Washer, Scale Trap Fastening	ND422-16	M16 low-stage suction	-	-	-	-	4	4
177	Tooth Washer, Scale Trap Fastening	ND422-20	M20	-	-	4	4	-	4
178	Scale Trap Wire Mesh	CR17800-A	N:AT7/F:8AT8	-	-	1	1	1	1
179	Scale Trap Cover	CR17900-A04	for 4AT1 low-stage suction	-	-	-	-	1	-
179	Scale Trap Cover	CR17900-A068	for 6AT1, 6AT2, 8AT1 6AT1N, 6AT2N, 8AT1N	-	-	1	1	1	1
179	Scale Trap Cover	CR17900-A08T2	for 8AT2 (Freon)	-	-	-	1	-	-
180	Gasket, Scale Trap Cover	CR17900-A04N	for 4AT1	-	-	-	-	1	-
180	Gasket, Scale Trap Cover	CR17900-A068N	for 6AT1, 6AT2, 8AT1 6AT1N, 6AT2N, 8AT1N	-	-	1	1	-	1
180	Gasket, Scale Trap Cover	CR17900-A08R2	for 8AT2 (Freon)	-	-	-	1	-	-
181	Scale Trap Cover Fastening Bolt	NB14012-040	M12×40	-	-	4	4	4	4
182	Suction Stop Valve 40A	CR72300-W040	MYK GVF ASSY W 40A	1	-	-	-	1	1
182	Suction Stop Valve 50A	CR72300-W050	MYK GVF ASSY W 50A	-	1	-	-	1	-
182	Suction Stop Valve 65A	CR72300-W065	MYK GVF ASSY W 65A	-	1	1	-	-	1

No.	Name	Item Code	Remarks	Qty					
				2	4	6	8	42	62
182	Suction Stop Valve 80A	CR72300-W080	MYK GVF ASSY W 80A	-	-	1	1	-	-
182	Suction Stop Valve 90A	CR72300-W090	MYK GVF ASSY W 90A	-	-	-	1	-	-
182-1	Companion Flange, Suction Stop Valve	CR74000-040	MYCOM 40A (male)	1	-	-	-	1	1
182-1	Companion Flange, Suction Stop Valve	CR74000-050	MYCOM 50A (male)	-	1	-	-	1	1
182-1	Companion Flange, Suction Stop Valve	CR74000-065	MYCOM 65A (male)	-	1	1	-	-	-
182-1	Companion Flange, Suction Stop Valve	CR74000-080	MYCOM 80A (male)	-	-	1	1	-	-
182-1	Companion Flange, Suction Stop Valve	CR74000-090	MYCOM 90A (male)	-	-	-	1	-	-
182B	Companion Flange Fastening Bolt, Suction Stop Valve	NB12012-065	SS400 M12×50	4	-	-	-	4	4
182B	Companion Flange Fastening Bolt, Suction Stop Valve	NB12016-075	SS400 M16×75	-	4	-	-	4	-
182B	Companion Flange Fastening Bolt, Suction Stop Valve	NB12016-090	SS400 M16×90	-	4	4	-	-	4
182B	Companion Flange Fastening Bolt, Suction Stop Valve	NB12020-090	SS400 M20×90	-	-	4	4	-	-
183	Suction Stop Valve Mounting Bolt	NBW44016-070	Stud-BT S45C M16×70	-	4	-	-	-	-
183	Suction Stop Valve Mounting Bolt	NB42012-085	Stud-BT S45C M12×85	4	-	-	-	-	-
183	Suction Stop Valve Mounting Bolt	NB14016-090	M16×90	-	-	4	-	-	4
183	Suction Stop Valve Mounting Bolt	NB14020-100	M20×100	-	-	-	4	-	-
183	Suction Stop Valve Mounting Bolt	NB14016-080	M16×80	-	-	-	-	4	-
183	Suction Stop Valve Mounting Bolt	NB14012-080	M12×80	-	-	-	-	4	4
184	Gasket, Centering Location, Suction Stop Valve Mount	CR72000-040N	MYCOM flange G 40A	1	-	-	-	1	1
184	Gasket, Centering Location, Suction Stop Valve Mount	CR72000-050N	MYCOM flange G 50A	-	-	-	-	1	-
184	Gasket, Centering Location, Suction Stop Valve Mount	CR72000-065N	MYCOM flange G 65A	-	1	-	-	-	1
184	Gasket, Centering Location, Suction Stop Valve Mount	CR72000-080N	MYCOM flange G 80A	-	-	1	-	-	-
184	Gasket, Centering Location, Suction Stop Valve Mount	CR72000-090N	MYCOM flange G 90A	-	-	-	1	-	-
185	Oil Cooler Assembly (water cooled)	CR18500-TAW	A T-TCF0.15-0609P	1	1	1	-	1	-
185	Oil Cooler Assembly (water cooled)	CR18500-TBW	B T-TCF0.25-0617P	-	-	-	1	-	1
185	Oil Cooler Assembly (water cooled)	CR18500-A2S	2A/2WA SUS (forward)	1	-	-	-	-	-
185	Oil Cooler Assembly (water cooled)	CR18500-A4S	4A/4WA/6A/6WA SUS (forward)	-	1	1	-	1	-
185	Oil Cooler Assembly (water cooled)	CR18500-A8S	8A/8WA SUS (forward)	-	-	-	1	-	1
185	Oil Cooler Assembly (water cooled)	CR18500-RA2S	2A/2WA SUS (reverse)	1	-	-	-	-	-

No.	Name	Item Code	Remarks	Qty					
				2	4	6	8	42	62
185	Oil Cooler Assembly (water cooled)	CR18500-RA4S	4A/4WA/6A/6WA SUS (reverse)	-	1	1	-	1	-
185	Oil Cooler Assembly (water cooled)	CR18500-RA8S	8A/8WA SUS (reverse)	-	-	-	1	-	1
190	Gasket, Oil Cooler Flange	CR19000-A	A, WA	1	1	1	1	1	1
192	Oil Cooler Assembly (refrigerant type)	CR18600-A2	2A/2WA (forward)	1	-	-	-	-	-
192	Oil Cooler Assembly (refrigerant type)	CR18600-A4	4A/4WA/6A/6WA (forward)	-	1	1	-	1	-
192	Oil Cooler Assembly (refrigerant type)	CR18600-A8	8A/8WA (forward)	-	-	-	1	-	1
192	Oil Cooler Assembly (refrigerant type)	CR18600-RA2	2A/2WA (reverse)	1	-	-	-	-	-
192	Oil Cooler Assembly (refrigerant type)	CR18600-RA4	4A/4WA/6A/6WA (reverse)	-	1	1	-	1	-
192	Oil Cooler Assembly (refrigerant type)	CR18600-RA8	8A/8WA (reverse)	-	-	-	1	-	1
195	Gasket, End Cover A (water cooled)	CR18500-GA	T-TCF end cover A	1	1	1	1	1	1
195	Gasket, End Cover A (direct expansion)	CR19500-ADN	A, WA end cover A	1	1	1	1	1	1
196	Gasket, End Cover B	CR18500-GB	T-TCF end cover B	1	1	1	1	1	1
196	Gasket, End Cover B (water cooled)	CR18500-GB024	T-TCF0.25-0617P end cover B	-	-	-	-	-	-
196	Gasket, End Cover B (direct expansion)	CR19600-ADN	A, WA end cover B	1	1	1	1	1	1
-	Gasket, Oil Cooler Mouth Piece	CR18800-ABN	A, WA, B, WB	1	1	1	1	1	1
-	Oil Cooler Zap, with Gasket	CR1929-A	A, WA	1	1	1	1	1	1
197	Thermometer Set	LC1103314	L/45 0 + 200 with case	-	1	-	-	-	-
197	Thermometer Set	LC1102314	I/45 0 + 200 with case	-	-	1	1	-	-
199	Thermometer Set	LC1103311	L/45-50 + 50 with case	-	1	-	-	1	-
199	Thermometer Set	LC1102311	I/45-50 + 50 with case	-	-	1	1	-	-
201	Thermometer Set	LC1103311	L/45 -50 + 50 with case	-	-	-	-	1	1
203	Thermometer Set	LC1102312	I/45 0 + 100 with case	-	-	-	-	1	1
205	Solenoid Valve	KF221-2	SX-7 200V	1	1	1	3	1	2
207	Manual Valve Assembly	NL1440-F06	JO6010 6D	1	1	1	1	1	1
207	Manual Valve Assembly,	NL1440-F08	JO6010 8D	1	1	1	1	1	1
207	Manual Valve Assembly	NL1440-N06	JO5990 6D	1	1	1	1	1	1
207	Manual Valve Assembly,	NL1440-N08	JO5990 8D	1	1	1	1	1	1
207	Manual Valve Assembly,	NL1440-NS	JO6000 8D	1	1	1	1	1	1
208	Eye Bolt	NB600-16	M16	1	1	2	2	2	2
213	External Safety Valve	CR21300-006P300	5602 3/4 300P	1	1	1	1	2	2
234	Oval Flange for Water Cooled Head Cover	CR71800-1	HF-20	2	4	6	8	6	8
235	Gasket, Oval Flange for Water Cooled Head Cover	CR71900-1	HF-20	2	4	6	8	6	8
236	Oval Flange for Water Cooled Head Cover Fastening Bolt	NB17010-025	SUS M10×25	4	8	12	16	12	16
245	Oil Heater	LF2102-220	MKCP-2002F	1	1	1	1	1	1

No.	Name	Item Code	Remarks	Qty					
				2	4	6	8	42	62
-	O-ring Set	CR7109-FA2	F 2A/4A/6A/8A	1	1	1	1	-	-
-	O-ring Set	CR7109-FA6	F 42A/62A	-	-	-	-	1	1
-	O-ring Set	CR7109-NA2	NH3 2A/4A/6A/8A	1	1	1	1	-	-
-	O-ring Set	CR7109-NA6	NH3 42A/62A	-	-	-	-	1	1
-	O-ring Set	CR7109-WA1	For WA single stage compressor	1	1	1	1	-	-
-	O-ring Set	CR7109-WA2	For WA two stage compressor	-	-	-	-	1	1
-	Gasket Set	CR7117-FA4	F4WA	-	1	-	-	-	-
-	Gasket Set	CR7117-FA6	F6WA	-	-	1	-	-	-
-	Gasket Set	CR7117-FA8	F8WA	-	-	-	1	-	-
-	Gasket Set	CR7117-NA2	F2WA/N2WA	1	-	-	-	-	-
-	Gasket Set	CR7117-NA4	N4WA	-	1	-	-	-	-
-	Gasket Set	CR7117-NA6	N6WA	-	-	1	-	-	-
-	Gasket Set	CR7117-NA7	N42WA/F42WA	-	-	-	-	1	
-	Gasket Set	CR7117-NA8	N8WA	-	-	-	1	-	-
-	Gasket Set	CR7117-NA9	N62WA/F62WA	-	-	-	-		1
-	Gasket Set	CR7118-FA4	F4A	-	1	-	-	-	-
-	Gasket Set	CR7118-FA6	F6A	-	-	1	-	-	-
-	Gasket Set	CR7118-FA8	F8A	-	-	-	1	-	-
-	Gasket Set	CR7118-NA2	N2A/F2A	1	-	-	-	-	-
-	Gasket Set	CR7118-NA4	N4A	-	1	-	-	-	-
-	Gasket Set	CR7118-NA6	N6A	-	-	1	-	-	-
-	Gasket Set	CR7118-NA7	N42A/F42A	-	-	-	-	1	-
-	Gasket Set	CR7118-NA8	N8A	-	-	-	1	-	-
-	Gasket Set	CR7118-NA9	N62A/F62A	-	-	-	-	-	1
-	Set of Consumables for Mechanical Seal	CR7129-FA	A/R	-	-	-	-	-	-
-	Set of Consumables for Mechanical Seal	CR7129-NA	A/NH3	-	-	-	-	-	-
-	Rod Bushing Attachment/Removal Tool	CR70100-AB	A, WA, B, WB	1	1	1	1	1	1
-	Discharge Valve Disassembly Tool	CR70200-AB	A, WA, B, WB	1	1	1	1	1	1
-	Disassembly Tool Set AM02	CR70400-AM02	A, WA	1	1	1	1	1	1
-	Disassembly Tool Set AM02/ME	CR70400-AM02ME	A, WA (for ME)	1	1	1	1	1	1

Table 7-2 Parts for WB-type Compressors

No.	Name	Item Code	Remarks	Qty						
				4	6	8	12	42	62	12·4
1	Crankcase	CR00100-B04	mm scale 4B/4WB	1	-	-	-	-	-	-
1	Crankcase	CR00100-B06	mm scale 6B/6WB	-	1	-	-	-	-	-
1	Crankcase	CR00100-B08	mm scale 8B/8WB	-	-	1	-	-	-	-
1	Crankcase	CR00100-B12	mm scale 12B/12WB	-	-	-	1	-	-	-
1	Crankcase	CR00100-B124	mm scale 12·4B	-	-	-	-	-	-	1
1	Crankcase	CR00100-B042	mm scale 42B/42WB	-	-	-	-	1	-	-
1	Crankcase	CR00100-B062	mm scale 62B/62WB	-	-	-	-	-	1	-
2	Crankshaft	CR00209-MB04H	AL 4B/4WB	1	-	-	-	-	-	-
2	Type BB Crankshaft	CR00209-MB04HB	BB 4B/4WB	1	-	-	-	-	-	-
2	Crankshaft	CR00209-MB06H	AL 6B/6WB/42B/42WB	-	1	-	-	1	-	-
2	Type BB Crankshaft	CR00209-MB06HB	BB 6B/6WB/42B/42WB	-	1	-	-	1	-	-
2	Crankshaft	CR00209-MB08H	AL 8B/8WB/62B/62WB	-	-	1	-	-	1	-
2	Type BB Crankshaft	CR00209-MB08HB	BB 8B/8WB/62B/62WB	-	-	1	-	-	1	-
2	Crankshaft 12B	CR00200-ALB12	AL 12B/12WB	-	-	-	1	-	-	-
2	Crankshaft 12·4B	CR00200-ALB16	AL 12·4B/12·4WB	-	-	-	-	-	-	1
3	Drag Crank A/B	CR00300-AB	A, WA, B, WB	1	1	1	-	1	1	-
3	Drag Crank 12B	CR00300-B12	12B, 12WB	-	-	-	1	-	-	1
4	Pulley Key B	CR00400-B	24×15.6×11 (rounded at one end)	1	1	1	1	1	1	1
5	Pulley Flat Washer	CR00500-B	B, WB	1	1	1	1	1	1	1
5	Pulley Flat Washer 90	CR00500-BL	B, WB	1	1	1	1	1	1	1
6	Pulley Lock Washer	CR00600-AB	A, WA, B, WB M27	1	1	1	1	1	1	1
7	Pulley Set Bolt	CR00700-AB	M27×50 (P=1.5)	1	1	1	1	1	1	1
8	Main Bearing Head	CR00800-MB	BM	1	1	1	-	1	1	-
8	Main Bearing Head	CR00800-B12	12B, 12WB		-	-	1	-	-	1
9	Gasket, Main Bearing Head	CR00900-BN	B, WB	1	1	1	-	1	1	-
9	Gasket, Main Bearing Head (old)	CR00910-B	B, WB (old type)	-	-	-	-	-	-	-
9	Gasket, Main Bearing Head 12B	CR02400-B12N	12B, 12WB	-	-	-	1	-	-	1
10	Main Bearing Head Fastening Bolt	NB1405/8-040	S45C 5/8×40	-	-	-	-	-	-	-
10	Main Bearing Head Fastening Bolt	NB35416-040	SCM3, M16×40	-	-	-	4	-	-	4
10	Main Bearing Head Fastening Bolt	NB14016-055	S45C, M16×55	12	12	12	-	12	12	-
12	Main Bearing B	CR01200-B	B, WB	1	1	1	-	1	1	-
12	Main Bearing 12B	CR01200-B12	12B 12WB	-	-	-	1	-	-	1
12-1	O-ring for Main Bearing	PA11-110	JISB2401 P110 NBR	-	-	-	-	2	2	2
13	Main Bearing Screw	NA22506-020	M6×20 (Countersunk screw)	1	1	1	1	1	1	1

No.	Name	Item Code	Remarks	Qty						
				4	6	8	12	42	62	12·4
14	CUNO Filter Assembly B	CR0149-B	B, WB	1	1	1	-	1	1	-
14	CUNO Filter Assembly 12B	CR0149-B12	12B 12WB	-	-	-	1	-	-	1
15	Gasket, CUNO Filter Cover	CR01500-BN	B, WB	1	1	1	1	1	1	1
16	CUNO Filter Cover Fastening Bolt	NB14010-030	M10×30 P=1.5 (small head)	4	4	4	4	4	4	4
20	Oil Supply and Discharge Valve	KA2130-010	Needle valve AS 10A	-	1	1	1	1	1	1
20	Oil Supply and Discharge Valve	KA2132-010	Needle valve VS-03P03-OA	1	1	1	-	-	-	1
20	Oil Supply and Discharge Valve	KA038-010RC	MAO 10A RC3/8	-	-	1	-	-	-	1
22	Oil Pressure Control Valve Assembly	NL151-N	JO-5920	-	1	1	1	1	1	1
22	Oil Pressure Control Valve Assembly	NL152-F	JO-5930	-	-	-	-	1	-	-
22	Oil Pressure Control Valve Assembly	NL152-SFX	SFX	-	-	1	1	-	-	-
23	Bearing Head	CR02300-MB	mm scale BM	1	1	1	-	1	1	-
23	Type BB Bearing Head	CR02300-MBB	mm scale BM, BB	1	1	1	-	1	1	-
23	Bearing Head 12B	CR02300-MB12	mm scale 12B 12WB	-	-	-	1	-	-	1
23	Type BB Bearing Head 12B	CR02300-MB12B	mm scale 12B, 12WB BB	-	-	-	1	-	-	1
24	Gasket, Bearing Head	CR00900-BN	same as main bearing head G.	1	1	1	-	-	-	-
24	Gasket, Bearing Head 12B	CR02400-B12N	12B, 12WB	-	-	-	1	-	-	-
25	Bearing Head Fastening Hexagon Socket Head Cap Screw	NB35416-035	SCM3 M16×35	-	-	-	4	-	-	4
25	Bearing Head Fastening Hexagon Socket Head Cap Screw	NB35416-040	SCM3 M16×40	4	4	4	4	4	4	4
25	Bearing Head Fastening Bolt	NB1405/8-040	S45C 5/8×40	-	-	-	-	-	-	-
26	Cover Plate	CR02600-B	B, WB	1	1	1	1	1	1	1
27	Gasket, Cover Plate	CR02700-BN	B, WB	1	1	1	1	1	1	1
28	Cover Plate Fastening Bolt	NB14016-090	S45C M16×90	12	12	12	12	12	12	12
28	Cover Plate Fastening Bolt	NB1405/8-040	S45C 5/8×90	-	-	-	-	-	-	-
29	Thrust Bearing B	CR02900-B	B, WB	1	1	1	-	1	1	-
29	Type BB Thrust Bearing B	CR02900-BBBME	B, WB BB aluminum	1	1	1	-	-	1	-
29	Thrust Bearing 12B	CR02900-B12	12B, 12WB	-	-	-	1	-	-	1
29	Thrust Bearing (old)	CR02910-B	B, WB (old type)	-	-	-	-	-	-	-
29-1	Thrust Ball Bearing	CR70800-B	B, WB (NH3) 51126	1	1	1	1	1	1	1
29-1	Thrust Roller Bearing	CR70900-B	B, WB (Freon)	1	1	1	1	1	-	1
29-3	O-ring for Thrust Bearing	PA11-145	JISB2401 P145 NBR	-	-	-	-	2	2	2
30	Washer for Thrust Bearing Fastening Bolt	CR03000-SF62	For M12 (small round washer)	6	6	6	-	6	6	6
30	Washer for Thrust Bearing Fastening Bolt	ND320-012		-	-	-	6	-	-	6
31	Thrust Bearing Fastening Bolt	NB14012-035	M12×35	6	6	6	6	6	6	6
31	Thrust Bearing Fastening Bolt	NB1401/2-035	S45C 1/2×35	-	-	-	-	-	-	-
32	Mechanical Seal Assembly B (HNBR)	CR03209-NB	B, WB (HNBR)	1	1	1	-	1	1	1

No.	Name	Item Code	Remarks	Qty						
				4	6	8	12	42	62	12·4
32	Mechanical Seal Assembly 12, 124B (HNBR)	CR03200-WBLH	12B, 12·4B (HNBR)	-	-	-	1	-	-	1
33	Double Seal Collar with O-ring	CR0339-FB	B, WB (Freon) with O-ring	1	1	1	1	-	-	-
33	Seal Collar with O-ring	CR0339-NB	B (NH3) with O-ring	1	1	1	1	-	-	-
33	Double Seal Collar with O-ring	CR0339-WB	WB with O-ring	1	1	1	1	-	-	-
34	Double Seal Collar Fixing Ring	-		1	1	1	1	1	1	-
35	Double Seal Collar Floating Seat	-		1	1	1	1	1	1	-
36	Double Seal Collar Lock Pin	-	φ5×14spring pin	1	1	1	1	1	1	-
37	O-ring for Double Seal Collar	PC61-053	AS568A 426 FKM	1	1	1	1	1	1	-
38	Double Seal Collar Spring	CR03800-AB	B, WB, A, WA	8	8	8	8	8	6	-
38	Double Seal Collar Spring Set	CR0389-B	B, WB	-	-	-	-	-	-	-
39	O-ring for Shaft Seal Collar	PC61-047	AS568A 344 FKM	-	-	-	-	-	-	-
39	O-ring for Shaft Seal Collar	PAH82-344	AS568A 344 HNBR	1	1	1	1	1	1	-
40	Lock Nut	CR04000-B	M95(P=1)	2	2	2	2	1	1	1
41	Shaft Seal Ring	CR04100-B	B, WB	1	1	1	1	1	1	-
42	O-ring for Shaft Seal Ring	PA61-051	AS568A 348 NBR	-	-	-	-	-	-	-
42	O-ring for Shaft Seal Ring	PC61-051	AS568A 348 FKM	-	-	-	-	-	-	-
42	O-ring for Shaft Seal Ring	PAH82-348	AS568A 348 HNBR	1	1	1	1	1	1	-
43	Helical Spring	CR04300-B	B, WB	10	10	10	10	10	10	10
43	Helical Spring Set	CR0439-B	B, WB	1	1	1	1	1	1	1
44	Spring Pin	NE3203-020	φ3×20	1	1	1	1	1	1	1
45	Hand Hole Cover (with window)	CR0459-B01	B, WB with Gasket	1	1	1	-	1	1	-
46	Hand Hole Cover (without window/with hole)	CR0459-B02	B, WB with Gasket	1	1	1	-	1	1	-
46	Hand Hole Cover (without window/without hole)	CR0459-B03	B, WB with Gasket	1	1	1	-	1	1	-
45 /46	Hand Hole Cover (former type B head cover)	CR04909-B12A	Tap,with Gasket	-	-	-	4	-	-	4
47	Gasket, Hand Hole Cover	CR04700-BN	B, WB	2	2	2	-	2	2	-
47	Gasket, Hand Hole Cover (WB head cover gasket)	CR05100-BN		-	-	-	4	-	-	4
48	Hand Hole Cover Fastening Bolt	NB14016-055	M16×55	32	32	32	-	32	32	-
48	Hand Hole Cover Fastening Bolt	NB15516-060S	SCM3/11T M16×60	-	-	-	88	-	-	-
48	Hand Hole Cover Fastening Bolt	NB111016-060	10.9T M16×60	-	-	-	88	-	-	88
48	Hand Hole Cover Fastening Bolt	NB1405/8-055	SS400 W5/8×55	-	-	-	-	-	-	-
49	Head Cover (air cooled) B	CR0499-BA	B with Gasket	2	3	4	6	3	4	-
49	Head Cover (air cooled) WB	CR0499-WBA	WB with Gasket	2	3	4	6	3	4	-
49	Head Cover (air cooled) 12B	CR04909-B12A	Tap, with Gasket	-	-	-	-	-	-	4
50	Head Cover (water cooled) B	CR0499-BW	B with Gasket	2	3	4	6	3	4	-
50	Head Cover (water cooled) WB	CR0499-WBW	WA with Gasket	2	3	4	6	3	4	-
50	Head Cover (water cooled) WBH	CR04902-MBWH	WBH	-	-	-	-	-	-	8

No.	Name	Item Code	Remarks	Qty						
				4	6	8	12	42	62	12·4
50	Head Cover (water cooled) Assembly	CR0509-WB1	WB MYCOM1	2	3	2	-	-	-	-
50	Head Cover (water cooled) Assembly	CR0509-WB2	WB MYCOM2	2	3	2	-	-	-	-
50	Head Cover (sea water) Assembly	CR0509-WBK1	WB MYCOM1	2	3	2	-	-	-	-
50	Head Cover (sea water) Assembly	CR0509-WBK2	WB MYCOM2	2	3	2	-	-	-	-
50	Head Cover (refrigerant) Assembly	CR0509-WBR1	WB MYCOM1	2	3	2	-	-	-	-
50	Head Cover (refrigerant) Assembly	CR0509-WBR2	WB MYCOM2	2	3	2	-	-	-	-
51	Gasket, Head Cover	CR05100-BN	B, WB	2	3	4	10	3	4	12
52	Head Cover Fastening Bolt	NB111016-045	10. 9T M16×45	-	-	-	132	-	-	176
52	Head Cover Fastening Bolt	NB14016-060	M16×60	44	66	88	132	66	88	88
-	Head Cover Marking Plate	CR05300-B1	B, WB MYCOM	2	3	4	6	3	4	8
-	Gasket, Head Cover Marking Plate	CR05500-B		2	3	4	6	3	4	8
53	Head Jacket Cover (water cooled)	CR0539-WB1	WB MYCOM1 with Gasket	-	-	-	-	-	2	4
53	Head Jacket Cover (water cooled)	CR0539-WB2	WB MYCOM2 with Gasket	-	-	-	-	-	2	4
53	Head Jacket Cover (sea water)	CR0539-WBK1	WB MYCOM1 with Gasket	-	-	-	-	-	2	4
53	Head Jacket Cover (sea water)	CR0539-WBK2	WB MYCOM2 with Gasket	-	-	-	-	-	2	4
54	Head Jacket Cover Fastening Bolt	NB17010-025	M10×25	24	36	48	72	36	48	96
55	Gasket, Head Jacket Cover (water cooled)	CR05500-WBW		2	3	4	6	3	4	8
-	Water Cooled Head Cover, Zinc ZAP WB	CR85400-WB		-	-	-	-	-	-	-
-	Gasket, Water Cooled Head Cover, Zinc ZAP WB	CR85500-WB		-	-	-	-	-	-	-
55	Gasket, Head Jacket Cover (refrigerant)	CR05500-WBR		2	3	4	6	3	4	8
56	Oil Pump B with Gasket	CR0569-B2	B, WB No. 2	1	1	1	-	-	-	-
56	Oil Pump 12, 16B with Gasket	CR0569-B3	12B, 12WB	-	-	-	1	-	-	1
56	Oil Pump B with Gasket	CR0569-B25	B, WB No. 2.5	-	-	-	-	1	1	-
58	O-ring for Oil Pump	PA61-043	AS568A 340 NBR	1	1	1	-	1	1	-
58	O-ring for Oil Pump	PC61-043	AS568A 340 FKM	1	1	1	-	1	1	-
59	Gasket, Oil Pump	CR05900-BN		1	1	1	-	1	1	-
59	Gasket, Oil Pump 12B	CR05900-B12N	12B, 12WB	-	-	-	1	-	-	1
60	Oil Pump Fastening Bolt	NB14012-035	M12×35	6	6	6	-	6	6	-
60	Oil Pump Fastening Bolt	NB14016-040	S45C M16×40	-	-	-	6	-	-	6
60	Oil Pump Fastening Bolt	NB111016-040	10.9T M16×40	-	-	-	6	-	-	6
60	Oil Pump Fastening Bolt	NB1405/8-040	S45C 5/8×40	-	-	-	-	-	-	-
61	Cylinder Sleeve B	CR0619-B2	B, WB with Gasket	4	6	8	12	6	8	16
61	Cylinder Sleeve Assembly Left	CR0619-ZBL	B, WB with Gasket	2	2	2	4	4	4	6
61	Cylinder Sleeve Assembly with Gasket, Right	CR0619-ZBR	B, WB	2	2	4	4	-	2	6
62	Cam Ring (left down)	CR06200-BL	B, WB	2	2	2	4	4	4	6
63	Cam Ring (right down)	CR06200-BR	B, WB	2	2	4	4	-	2	6

No.	Name	Item Code	Remarks	Qty						
				4	6	8	12	42	62	12·4
65	Retaining Ring	CR06500-B	B, WB	4	4	6	8	4	6	12
66	Gasket, Cylinder Sleeve	CR06600-B	B, WB	4	6	8	12	6	8	16
67	O-ring for Cylinder Sleeve	PC61-062	AS568A 435 FKM	-	-	-	-	2	2	4
67	O-ring for Cylinder Sleeve	PA61-062	AS568A 435 NBR	-	-	-	-	2	2	4
68	Lift Pin	CR06800-B	B, WB	24	24	36	48	24	36	72
69	Lift Pin Spring	CR06900-B	B, WB	24	24	36	48	24	36	72
70	Split Cotter Pin for Lift Pin	CR07000-AB	A, WA, B, WB	24	24	36	48	24	36	72
71	Suction Valve	CR07100-B	B, WB	4	6	8	12	6	8	16
71	Suction Valve Assembly	CR0719-NB	B, WB (NH3)	4	6	8	12	6	8	16
71	Suction Valve Assembly	CR0719-FB	B, WB (Freon)	4	6	8	12	6	8	16
72	Suction Valve Spring	CR11600-AB4	A/B type 4 single stage/high-stage	32	48	64	96	16	16	32
72	Suction Valve Spring	CR11600-AB4	A/B type 4 (R134a, R404A, R507A)	32	48	64	96	48	64	128
72	Suction Valve Spring	CR07200-AB	A/B type 2 low-stage	-	-	-	-	18	18	36
-	Suction Valve Spring Set	CR0729-WB4	WB CR11600-AB4×8 springs	4	6	8	12	48	64	128
-	Suction Valve Spring Set	CR0729-B2	B-2 CR07200-AB×9 springs	-	-	-	-	4	6	12
73	Valve Plate	CR07300-NWB	WB/NH3 single stage/high-stage	4	6	8	12	2	2	4
73	Valve Plate	CR07300-NWB	R134a, R404A, R507A low-stage	-	-	-	-	4	6	12
73	Valve Plate	CR07300-FWB	WB/R single stage/high-stage	4	6	8	12	2	2	4
74	Discharge Cage Guide WB	CR07400-B	WB	4	6	8	12	6	8	16
75	Discharge Cage Guide Fastening Bolt	NB14012-060	M12×60 (P=1.25)	20	30	40	60	30	30	80
75	Discharge Cage Guide Fastening Bolt	NB111012-060	10.9T M12×60	-	-	-	60	-	-	-
75	Discharge Cage Guide Fastening Bolt	NB1401/2-060	S45C 1/2×60 fine thread	-	-	-	-	-	-	-
76	Connecting Rod (for high-stage)	CR07600-BN	B, WB needle bearing	-	-	-	-	2	2	4
77	Connecting Rod (for low-stage)	CR07600-BM	B, WB bushing	4	6	8	12	4	6	12
78	Crank Pin Fastening Bolt	CR07800-B	B, WB	8	12	16	24	12	16	32
78	Rod Fastening Bolt Set	CR0789-B	B, WB	8	12	16	24	12	16	32
79	Washer for Crank Pin Fastening Bolt	CR07900-B	B, WB	8	12	16	24	12	16	32
80	First Nut, Crank Pin Fastening	CR08000-B1	B, WB	8	12	16	24	12	16	32
81	Second Nut, Crank Pin Fastening	CR08000-B2	B, WB	8	12	16	24	12	16	32
82	Connecting Rod Bushing	CR08200-BF	B, WB BP8-2F low-stage	4	6	8	12	4	6	12
83	Connecting Rod Bushing (needle bearing)	CR8300-B	A, WA TAW40 high-stage	-	-	-	-	2	2	4
84	Bearing Halves (top/bottom set)	CR0849-B	B, WB	4	6	8	12	6	8	16
84	Bearing Halves (top/bottom set)	CR0849-B05	B, WB 0.5 mm	-	-	-	-	-	-	-
84	Bearing Halves (top/bottom set)	CR0849-B10	B, WB 1.0 mm	-	-	-	-	-	-	-

No.	Name	Item Code	Remarks	Qty						
				4	6	8	12	42	62	12·4
85	Piston	CR08500-ALBMH	B, WB AL	4	6	8	12	6	8	16
86	Piston Pin	CR08600-B	B, WB	4	6	8	12	6	8	16
87	Lock Spring, Piston Pin Locking	CR08700-B	B, WB	8	12	16	24	12	16	32
87	Piston Pin Lock Spring Set	CR0879-B	B, WB	4	6	8	12	6	8	16
88	Piston Ring Set	CR0899-FB	B, WB (Freon), SF	4	6	8	12	6	8	16
88	Piston Ring Set	CR0899-NB	B, WB (NH3)	4	6	8	12	-	-	-
88	Piston Ring Set	CR0899-NB2	B, WB (NH3) two stage machine	-	-	-	-	6	8	16
88	Piston Ring Set	CR0899-WB1	WB	4	6	8	12	6	8	16
88	Piston Ring Set	CR0899-WB12	WB (Propane)	-	-	-	-	-	-	-
89	Piston Ring (B, FC-PC-BFG1)	CR08900-BFCBFG1	1st	4	6	8	12	6	8	16
90	Piston Ring (B, FC-P)	CR08900-BFCP	2nd	4	6	8	12	6	8	16
90	Piston Ring (B, FC-UC)	CR08900-BFCUC	2nd	-	-	-	-	-	-	-
90	Piston Ring (B, GA-P)	CR08900-BGAP	2nd for R23, Propane	-	-	-	-	-	-	16
100	Piston Ring (B, FC-PC-BC3P)	CR08900-BFCBC3P	3rd	4	6	8	12	6	8	16
101	Piston Ring (B, FC-PC-BC3)	CR08900-BFCBC3	4th	4	6	8	12	6	8	16
108	Discharge Valve Assembly (WB, CN)	CR10800-WBCN	NH3 single stage/high-stage	4	6	8	12	2	2	4
108	Discharge Valve Assembly (WB, CR)	CR10800-WBCR	R22, R23 single stage/high-stage	4	6	8	12	2	2	4
108	Discharge Valve Assembly (WB, CR)	CR10800-WBCR	Propane	4	6	8	12	6	8	16
108	Discharge Valve Assembly (WB, WCRH)	CR10800-WBCRH	R134a, R404A, R507A single stage/high-stage	4	6	8	12	2	2	4
108	Discharge Valve Assembly (B, SN)	CR10800-BSN	NH3 low-stage	-	-	-	-	4	6	4
108	Discharge Valve Assembly (B, SR)	CR10800-BSR	Freon low-stage	-	-	-	-	4	6	4
109	Discharge Valve Cage (WB, CN)	CR10900-WBCN	NH3 single stage/high-stage	4	6	8	12	2	2	4
109	Discharge Valve Cage (WB, CR)	CR10900-WBCR	R22, R23 single stage/high-stage	4	6	8	12	2	2	4
109	Discharge Valve Cage (WB, CR)	CR10900-WBCR	Propane	4	6	8	12	6	8	16
109	Discharge Valve Cage (WB, WCRH)	CR10900-WBCRH	R134a, R404A, R507A single stage/high-stage	4	6	8	12	2	2	4
109	Discharge Valve Cage (B, SN)	CR10900-BSN	NH3 low-stage	-	-	-	-	4	6	12
109	Discharge Valve Cage (B, SR)	CR10900-BSR	Freon low-stage	-	-	-	-	4	6	12
110	Discharge Valve (SFW)	CR11000-SFW	R134a, R404A, R507A single stage/high-stage	4	6	8	12	2	2	4
110	Discharge Valve	CR11000-B14	R134a, R404A, R507A low-stage	-	-	-	-	4	6	12
110	Discharge Valve	CR11000-B14	NH3, R22, R23, Propane	4	6	8	12	6	8	16
111	Discharge Valve Seat	CR11100-B	B, WB	4	6	8	12	6	8	16
112	Discharge Valve Fastening Bolt	CR11200-B	B, WB	4	6	8	12	6	8	16
112	Discharge Valve Fastening Bolt Set	CR1129-B	B, WB	4	6	8	12	6	8	16

No.	Name	Item Code	Remarks	Qty						
				4	6	8	12	42	62	12·4
113	First Nut, Discharge Valve Fastening	CR11300-B1		4	6	8	12	6	8	16
114	Second Nut, Discharge Valve Fastening	CR11300-B2		4	6	8	12	6	8	16
116	Discharge Valve Spring	CR11600-AB4	AB Type 4 NH3, Freon single stage, high-stage	48	72	96	144	24	24	48
116	Discharge Valve Spring	CR11600-AB4	AB Type 4 Propane	48	72	96	144	72	96	192
116	Discharge Valve Spring	CR11600-AB3	AB Type 3 NH3, Freon low-stage	-	-	-	-	36	54	108
-	Discharge Valve Spring Set	CR1169-WB4	WB Type 4 12springs/set	4	6	8	12	2 or 6	2 or 8	4 or 12
-	Discharge Valve Spring Set	CR1169-B3	B Type 3 9springs/set	-	-	-	-	4	6	12
117	Head Spring	CR11700-B	B, WB	4	6	8	12	6	8	16
118	Oil Strainer Holder	CR11800-B	B, WB	1	1	1	-	1	1	-
118	Oil Strainer Holder 12B	CR11800-B12	12B	-	-	-	1	-	-	1
119	Oil Strainer Wire Mesh	CR11900-B	B, WB	1	1	1	-	1	1	-
119	Oil Strainer Wire Mesh 12B	CR11900-B12	12B	-	-	-	1	-	-	1
121	Oil Strainer Cover with Hole	CR12100-B01	B, WB for marine	1	1	1	1	1	1	1
121	Oil Strainer Cover without Hole	CR12100-B	B, WB	1	1	1	1	1	1	1
122	Gasket, Oil Strainer Cover	CR12200-BN	B, WB	1	1	1	1	1	1	1
123	Oil Strainer Cover Fastening Bolt	NBH114010-030	M10×30 (small head)	4	4	4	4	4	4	4
123	Oil Strainer Cover Fastening Bolt	NB1403/8-030	S45C 3/8×30	-	-	-	-	-	-	-
-	Oil Strainer Assembly with Gasket B	CR1239-B	B, WB	1	1	1	-	1	1	-
-	Oil Strainer Assembly with Gasket 12B	CR1239-B12	12B	-	-	-	1	-	-	1
125	Intermediate Shaft Bearing Assembly 12B	CR12609-B12		-	-	-	1	-	-	1
126	Intermediate Shaft Bearing Fastening Bolt	NB114016-050	8.8T M16×50	-	-	-	4	-	-	4
126	Washer, Tapered Pin	ND110-16	SS400 M16	-	-	-	4	-	-	4
128	Intermediate Shaft Bearing Half (A)	CR12800-B12A		-	-	-	2	-	-	2
129	Intermediate Shaft Bearing Half (B)	CR12800-B12B		-	-	-	2	-	-	2
131	Tapered Pin 12B	CR13400-12B	8×100	-	-	-	4	-	-	4
133	Tapered Pin Fastening Nut	NB114016-050	S45C M16	-	-	-	4	-	-	4
134	Tapered Pin for Intermediate Shaft Bearing, with Screw	CR13100-B12		-	-	-	4	-	-	4
135/141	Push Rod, Unloader Slide Valve	CR13509-B061	6B/6WB -1	-	1	-	-	1	-	-
135/141	Push Rod, Unloader Slide Valve	CR13509-B062	6B/6WB -2	-	1	-	-	-	-	-
135/141	Push Rod, Unloader Slide Valve	CR13509-B063	6B/6WB -3	-	-	-	-	1	-	-
135/141	Push Rod, Unloader Slide Valve	CR13509-B081	8B/8WB -1	1	-	1	1	-	1	1
135/141	Push Rod, Unloader Slide Valve	CR13509-B082	8B/8WB -2	-	-	1	-	-	1	1
135/141	Push Rod, Unloader Slide Valve	CR13509-B083	8B/8WB -3	1	-	1	-	-	1	1

No.	Name	Item Code	Remarks	Qty						
				4	6	8	12	42	62	12·4
135/141	Push Rod, Unloader Slide Valve	CR13509-B084	8B/8WB -4	-	-	-	-	-	1	1
135/141	Push Rod, Unloader Slide Valve	CR13509-B162	16B-2	-	-	-	-	-	-	1
135/141	Push Rod, Unloader Slide Valve	CR13509-B163	16B-3	-	-	-	1	-	-	1
135/141	Push Rod, Unloader Slide Valve	CR13509-B164	16B-4	-	-	-	-	-	-	-
142	Unloader Device Spring	CR14200-B	B, WB	2	2	3	4	2	3	6
143	Push Rod Washer	CR14300-B	B, WB/ 38*10*3	2	2	3	4	2	3	6
144	Push Rod Fastening Bolt	NB12010-020	M10×20 (small head)	2	2	3	4	2	3	6
145	Unloader Piston	CR14500-FCB	B, WB	2	2	3	4	2	3	6
146	Unloader Piston Cover B	CR14600-B	B, WB	2	2	3	4	2	3	-
146	Unloader Piston Cover 12, 12-4B	CR14600-B12	12B, 12WB, 12·4B, 12·4WB	-	-	-	4	-	-	6
147	Gasket, Unloader Piston Cover	CR14700-BN	B, WB	2	2	3	-	2	3	-
147	Gasket, Unloader Piston Cover	CR14700-B12N	12B, 12WB, 12·4B, 12·4WB	-	-	-	4	-	-	2
149	Unloader Piston Cover Fastening Bolt	NB14010-035	M10×35	12	12	18	24	12	18	42
149	Unloader Piston Cover Fastening Bolt	NB12010-040	SS400 M10×40	-	-	-	-	-	-	30
150	Hexagon Socket Head Cap Screw, Unloader Piston Cover	NB3541/4-015	SCM3 W1/4L15	2	2	3	4	2	3	6
150-1	Washer, Hexagon Socket Head Cap Screw	ND113-065	6.5×13×1	2	2	3	4	2	3	6
154	Suction Strainer B	CR15401-B	B, WB	1	2	2	-	-	-	-
154	Suction Strainer 12B	CR15400-B12	12B, 12WB	-	-	-	2	-	-	-
154	Suction Strainer 12·4B long (old)	CR15400-B124L	12·4B (long) old type	-	-	-	-	-	-	1
154	Suction Strainer 12·4B long	CR15401-B124L	12·4B/12·4WB (long)	-	-	-	-	-	-	1
154	Suction Strainer 12·4B short (old)	CR15400-B124S	12·4B (short) old type	-	-	-	-	-	-	1
154	Suction Strainer 12·4B short	CR15401-B124S	12·4/B12·4WB (short)	-	-	-	-	-	-	1
156	Suction Strainer Canvas B	CR15600-B	B, WB	1	2	2	-	-	-	-
156	Suction Strainer Canvas 12B	CR15600-B12	12B/12WB/12·4B	-	-	-	2	-	-	1
156	Suction Strainer Canvas 12·4B long	CR15600-B124L	12·4WB	-	-	-	-	-	-	1
158	Suction Strainer Holding Spring 4B	CR15800-B04	4B/4WB	1	-	-	-	-	-	-
158	Suction Strainer Holding Spring	CR15800-B068S	68B, short	-	2	2	-	-	-	-
159	Suction Strainer Lock Spring B	CR15900-B	B, WB	1	2	2	-	-	-	-
159	Suction Strainer Lock Spring 12B	CR15900-B12	12B/12WB/12·4B /12·4WB	-	-	-	4	-	-	4
161	Suction End Cover B	CR16100-B	B, WB	-	2	2	-	-	-	-
161	Suction End Cover 4B	CR16100-B04	4B/4WB	1	-	-	-	-	-	-
161	Suction End Cover 12B	CR16100-B12	12B/12WB/12·4B /12·4WB	-	-	-	2	-	-	2
162	Gasket, Suction End Cover B	CR16200-BN	B, WB	1	2	2	-	-	-	-

No.	Name	Item Code	Remarks	Qty						
				4	6	8	12	42	62	12·4
162	Gasket, Suction End Cover 12B	CR16200-B12N	12B/12WB/12·4B /12·4WB	-	-	-	2	-	-	2
163	Suction End Cover Fastening Bolt	NB14012-040	S45C M12×40	6	16	16	16	-	-	16
163	Suction End Cover Fastening Bolt	NB111012-040	10. 9T M12×40	-	-	-	-	-	-	16
164	Oil Sight Glass	CR16400-AB	70D A, WA, B, WB	1	1	1	2	1	1	2
165	O-ring for Oil Sight Glass	PA61-035	AS568A 332 NBR	2	2	2	4	2	2	4
165	O-ring for Oil Sight Glass	PC61-035	AS568A 332 FKM	2	2	2	4	2	2	4
166	Oil Sight Gland	CR16600-AB	70D 3/8	1	1	1	2	1	1	2
167	Oil Sight Gland Fastening Bolt	NB14010-030	M10×30 (small head)	4	4	4	8	4	4	8
168	Discharge Elbow	CR16800-A04	4AE1	-	-	-	-	-	-	2
168	Discharge Elbow	CR16800-B06	6BE1 (NH3, Freon) B	-	1	-	2	-	-	2
168	Discharge Elbow	CR16800-B08	8BE1 (Freon)	-	1	1	-	-	-	-
168	Discharge Elbow	CR16800-B082	8BE2 (Freon)	-	-	1	-	-	-	-
168	Discharge Elbow (high-stage discharge)	CR16800-B062	62BE1 B, WB	-	-	-	-	1	1	-
168	Discharge Elbow (low-stage discharge)	CR16800-BN06	Domestic land use, 6BE1N (NH3)	-	1	-	-	-	-	-
168	Discharge Elbow	CR16800-BN08	Domestic land use, 8BE2N (NH3)	-	-	1	-	-	-	-
169	Gasket, Discharge Elbow	CR72000-065N	MYCOM flange gasket 65A	-	-	-	-	1	1	2
169	Gasket, Discharge Elbow	CR72000-080N	MYCOM flange gasket 80A	-	-	-	-	1	1	2
169	Gasket, Discharge Elbow	CR72000-090N	MYCOM flange gasket 90A	-	1	1	-	-	-	-
169	Gasket, Discharge Elbow	CR72000-100N	MYCOM flange gasket 100A	-	-	1	-	-	-	-
170	Discharge Elbow Fastening Bolt	NB14016-055	S45C M16×55	-	-	-	-	6	4	8
170	Discharge Elbow Fastening Bolt	NB114016-055	8.8T M16×55	-	-	-	-	-	-	8
170	Discharge Elbow Fastening Bolt	NB14016-090	S45C M16×90	-	-	-	-	2	2	-
170	Discharge Elbow Fastening Bolt	NB14020-060	S45C M20×60	-	4	4	8	-	4	8
170	Discharge Elbow Fastening Bolt	NB114020-060	8.8T M20×60	-	-	-	8	-	-	8
-	Tooth Washer, Discharge Elbow Fastening	ND422-16	for M16	-	-	-	-	8	8	8
-	Tooth Washer, Discharge Elbow Fastening	ND422-20	for M20	-	4	4	8	-	4	8
171	Needle Valve	KA2130-010	AS 10A	-	1	-	2	2	2	4
171	Needle Valve	KA2132-010	VS-03PO3-OA	1	1	1	-	-	-	4
172	Gasket, Discharge	CR72000-050N	MYCOM flange G 50A	-	-	-	-	2	2	4
172	Gasket, Discharge	CR72000-065N	MYCOM flange G 65A	-	-	-	-	2	2	-
172	Gasket, Discharge	CR72000-080N	MYCOM flange G 80A	3	2	-	4	-	-	2
172	Gasket, Discharge	CR72000-090N	MYCOM flange G 90A	-	2	2	2	-	-	-
173	Discharge Stop Valve	CR72300-W050	MYK GVF ASSY W 50A	-	-	-	-	1	1	2

No.	Name	Item Code	Remarks	Qty						
				4	6	8	12	42	62	12·4
173	Discharge Stop Valve	CR72300-W065	MYK GVF ASSY W 65A	-	-	-	-	1	1	-
173	Discharge Stop Valve	CR72300-W080	MYK GVF ASSY W 80A	1	1	-	2	-	-	2
173	Discharge Stop Valve	CR72300-W090	MYK GVF ASSY W 90A	-	1	1	-	-	-	-
173	Discharge Stop Valve	CR72300-W100	MYK GVF ASSY W100A	-	-	1	-	-	-	-
173-1	Companion Flange, Discharge Stop Valve	CR74000-050	MYCOM 50A (male)	-	-	-	-	2	1	2
173-1	Companion Flange, Discharge Stop Valve	CR74000-065	MYCOM 65A (male)	-	-	-	-	2	1	-
173-1	Companion Flange, Discharge Stop Valve	CR74000-080	MYCOM 80A (male)	1	1	1	2	-	-	2
173-1	Companion Flange, Discharge Stop Valve	CR74000-090	MYCOM 90A (male)	1	1	1	-	-	-	-
173-1	Companion Flange, Discharge Stop Valve	CR74000-100	MYCOM 100A (male)	-	1	1	-	-	-	-
173 B	Companion Flange Fastening Bolt, Discharge Stop Valve	NB12016-075	SS400 M16×75	-	-	-	-	4	4	8
173 B	Companion Flange Fastening Bolt, Discharge Stop Valve	NB12016-090	SS400 M16×90	-	-	-	-	4	4	-
173 B	Companion Flange Fastening Bolt, Discharge Stop Valve	NB12020-090	SS400 M20×90	4	4	-	8	-	-	8
173 B	Companion Flange Fastening Bolt, Discharge Stop Valve	NB12022-110	SS400 M22×110	-	-	4	-	-	-	-
173 B	Companion Flange Fastening Nut, Discharge Stop Valve	NC120-16	SS400 M16	-	-	-	-	8	8	8
173 B	Companion Flange Fastening Nut, Discharge Stop Valve	NC120-20	SS400 M20	4	4	-	-	-	-	8
173 B	Companion Flange Fastening Nut, Discharge Stop Valve	NC120-22	SS400 M22	-	-	4	-	-	-	-
174	Companion Flange Fastening Bolt, Discharge Stop Valve	NB12016-080	SS400 M16×80	-	-	-	-	4	4	8
174	Companion Flange Fastening Bolt, Discharge Stop Valve	NB12016-090	SS400 M16×90	-	-	-	-	4	4	-
174	Companion Flange Fastening Bolt, Discharge Stop Valve	NB114016-080	8.8T M16×80	-	-	-	-	-	-	8
174	Companion Flange Fastening Bolt, Discharge Stop Valve	NB114020-100	8.8T M20×100	-	-	-	-	-	-	8
174	Companion Flange Fastening Bolt, Discharge Stop Valve	NB12020-090	SS400 M20×90	4	-	-	-	-	-	-
174	Companion Flange Fastening Bolt, Discharge Stop Valve	NB12020-100	SS400 M20×100	-	-	-	-	-	-	8
174	Companion Flange Fastening Bolt, Discharge Stop Valve	NB13020-100	S25C M20×100	-	-	-	8	-	-	-
174	Companion Flange Fastening Bolt, Discharge Stop Valve	NB14020-100	S45C M20×100	-	4	-	-	-	-	-
174	Companion Flange Fastening Bolt, Discharge Stop Valve	NB12022-100	SS400 M22×100	-	-	4	8	-	-	-
174	Companion Flange Fastening Bolt, Discharge Stop Valve	NB12022-110	SS400 M22×110	-	-	4	-	-	-	-
174	Discharge Stop Valve Fastening Nut	NC120-16	SS400 M16	-	-	-	-	8	8	8
174	Discharge Stop Valve Fastening Nut	NC120-20	SS400 M20	4	4	-	-	-	-	8
174	Discharge Stop Valve Fastening Nut	NC120-22	SS400 M22	-	-	4	8	-	-	-
175	Scale Trap	CR17500-A061	6AT1 high-stage suction	-	-	-	-	1	1	-
175	Scale Trap	CR17500-A081	8AT1 low-stage suction	-	-	-	-	1	-	-
175	Scale Trap	CR17500-AN061	6AT1N (NH3) domestic land use	-	-	-	-	1	-	-

No.	Name	Item Code	Remarks	Qty						
				4	6	8	12	42	62	12·4
175	Scale Trap	CR17500-AN081	8AT1N (NH4) domestic land use	-	-	-	-	1	-	-
175	Scale Trap	CR17500-B06	6BT1 (NH3)	-	1	-	-	-	1	-
175	Scale Trap	CR17500-B081	8BT1 (NH3, freon)	-	1	-	-	-	1	-
175	Scale Trap	CR17500-BN081	8BT1N (NH3) domestic land use	-	1	1	-	-	-	-
175	Scale Trap	CR17500-BN082	8BT2N	-	-	1	-	-	-	-
176	Gasket, Scale Trap Main Body	CR72000-065N	MYCOM flange gasket 65A	-	-	-	-	1	1	-
176	Gasket, Scale Trap Main Body	CR72000-080N	MYCOM flange gasket 80A	-	-	-	-	1	1	-
176	Gasket, Scale Trap Main Body	CR72000-100N	MYCOM flange gasket 100A	-	1	1	-	-	-	-
177	Scale Trap Fastening Bolt	NB14020-060	S45C M20×60	-	-	-	-	8	8	-
177	Scale Trap Fastening Bolt	NB14022-065	S45C M22×65	-	4	4	-	-	-	-
177	Tooth Washer, Scale Trap Fastening	ND422-20	M20	-	-	-	-	8	8	-
177	Tooth Washer, Scale Trap Fastening	ND422-22	M22	-	4	4	-	-	-	-
178	Scale Trap Wire Mesh	CR17800-A	A, WA, 42B, 42WB, 62B, 62WB	-	-	-	-	2	1	-
178	Scale Trap Wire Mesh	CR17800-B	B, WB	-	1	1	-	-	1	-
178	Scale Trap Wire Mesh	CR17800-B08R	8BR	-	-	1	-	-	-	-
179	Scale Trap Cover	CR17900-A068	for 6AT1, 6AT2, 8AT1	-	-	-	-	2	1	-
179	Scale Trap Cover	CR17900-B068	for 6BT1, 8BT1	-	1	1	-	-	1	-
179	Scale Trap Cover	CR17900-B08T2	for 8BT2 (Freon)	-	-	1	-	-	-	-
180	Gasket, Scale Trap Cover 68A	CR18000-A068N	for 6AT1, 6AT2, 8AT1	-	-	-	-	2	1	-
180	Gasket, Scale Trap Cover	CR18000-BN	for 6BT1, 8BT1	-	1	1	-	-	-	-
180	Gasket, Scale Trap Cover 8BR	CR18000-B08RN	8BR	-	-	1	-	-	-	-
181	Scale Trap Cover Fastening Bolt	NB14012-040	M12×40	-	8	8	-	8	8	-
182	Suction Stop Valve 65A	CR72300-W065	MYK GVF ASSY W 65A	-	-	-	-	1	1	-
182	Suction Stop Valve 80A	CR72300-W080	MYK GVF ASSY W 80A	1	-	-	-	1	-	1
182	Suction Stop Valve 90A	CR72300-W090	MYK GVF ASSY W 90A	1	1	-	1	-	1	-
182	Suction Stop Valve 100A	CR72300-W100	MYK GVF ASSY W100A	-	1	1	-	-	1	-
182	Suction Stop Valve 125A	CR72300-W125	MYK GVF ASSY W125A	-	-	1	1	-	-	1
182-1	Companion Flange, Suction Stop Valve	CR74000-065	MYCOM 65A (male)	-	-	-	-	1	1	-
182-1	Companion Flange, Suction Stop Valve	CR74000-080	MYCOM 80A (male)	-	-	-	-	1	-	1
182-1	Companion Flange, Suction Stop Valve	CR74000-090	MYCOM 90A (male)	1	1	-	1	-	1	-
182-1	Companion Flange, Suction Stop Valve	CR74000-100	MYCOM 100A (male)	-	1	1	-	-	1	-
182-1	Companion Flange, Suction Stop Valve	CR74000-125	MYCOM 125A (male)	-	-	1	1	-	-	1
182 B	Companion Flange Fastening Bolt, Suction Stop Valve	NB12016-060	SS400 M16×60	-	-	-	-	4	4	-
182 B	Companion Flange Fastening Bolt, Suction Stop Valve	NB12020-080	SS400 M20×80	-	-	-	-	4	4	-

No.	Name	Item Code	Remarks	Qty						
				4	6	8	12	42	62	12·4
182 B	Companion Flange Fastening Bolt, Suction Stop Valve	NB12020-090	SS400 M20×90	4	-	-	8	-	-	12
182 B	Companion Flange Fastening Bolt, Suction Stop Valve	NB12020-105	SS400 M20×105	-	-	4	-	-	-	-
182 B	Companion Flange Fastening Bolt, Suction Stop Valve	NB12022-100	SS400 M22×100	-	4	-	-	-	-	-
182 B	Companion Flange Fastening Bolt, Suction Stop Valve	NB10420-100	SNB7 M20×100	-	-	-	10	-	-	-
182 B	Companion Flange Fastening Bolt, Suction Stop Valve	NC120-16	SS400 M16	-	-	-	-	4	4	-
182 B	Companion Flange Fastening Bolt, Suction Stop Valve	NC120-20	SS400 M20	4	-	4	10	4	4	12
182 B	Companion Flange Fastening Bolt, Suction Stop Valve	NC120-22	SS400 M22	-	4	-	-	-	-	-
183	Suction Stop Valve Mounting Bolt	NB12016-090	SS400 M16×90	-	-	-	-	4	4	-
183	Suction Stop Valve Mounting Bolt	NB12020-090	SS400 M20×90	4	4	-	-	-	-	-
183	Suction Stop Valve Mounting Bolt	NB10420-100	SNB7 M20×100	-	-	-	-	-	-	10
183	Suction Stop Valve Mounting Bolt	NB12020-100	SS400 M20×100	-	4	4	8	4	4	-
183	Suction Stop Valve Mounting Bolt	NB12020-110	SS400 M20×110	-	-	4	-	-	-	-
183	Suction Stop Valve Mounting Bolt	NB12022-105	SS400 M22×105	-	4	-	-	-	-	-
183	Nut for Suction Stop Valve Mounting Bolt	NC120-16	SS400 M16	-	-	-	-	4	4	-
183	Nut for Suction Stop Valve Mounting Bolt	NC120-20	SS400 M20	4	4	4	8	4	4	12
183	Nut for Suction Stop Valve Mounting Bolt	NC120-22	SS400 M22	-	4	-	-	-	-	-
184	Gasket, Centering Location, Suction Stop Valve Mount	CR72000-065N	MYCOM flange gasket 65A	-	-	-	-	4	2	-
184	Gasket, Centering Location, Suction Stop Valve Mount	CR72000-080N	MYCOM flange gasket 80A	-	-	-	-	4	2	1
184	Gasket, Centering Location, Suction Stop Valve Mount	CR72000-090N	MYCOM flange gasket 90A	3	2	-	-	-	-	-
184	Gasket, Centering Location, Suction Stop Valve Mount	CR72000-100N	MYCOM flange gasket 100A	-	1	2	-	-	-	-
184	Gasket, Centering Location, Suction Stop Valve Mount	CR72000-125N	MYCOM flange gasket 125A	-	-	2	1	-	-	1
184-1	Spacer	CR75500-090	90A	1	-	-	1	-	-	-
184-1	Spacer	CR75500-125	125A	-	-	-	-	-	-	1
185	Oil Cooler Assembly (water cooled, forward)	CR18500-BS	B, WB SUS (forward)	1	1	1	-	1	1	-
185	Oil Cooler Assembly (water cooled, reverse)	CR18500-RBS	B, WB SUS (reverse)	1	1	1	-	1	1	-
185	Oil Cooler Assembly (water cooled, forward) 12B	CR18500-B12	12B, 16B, 12·4B (forward)	-	-	-	1	-	-	1
185	Oil Cooler Assembly (water cooled)	CR18500-TBK	B T-TCFB-0.25-0617 P	-	-	-	-	-	-	-
185	Oil Cooler Assembly (water cooled)	CR18500-TBW	B T-TCF-0.25-0617P	1	1	1	-	1	1	-
186	Oil Cooler Shell (water cooled, forward)	CR18507-B	B, WB (forward)	-	-	-	-	-	-	-
186	Oil Cooler Shell (water cooled, reverse)	CR18507-RB	B, WB (reverse)	-	-	-	-	-	-	-
192	Oil Cooler Assembly (refrigerant type, forward)	CR18600-B	B, WB (forward)	1	1	1	-	1	1	-

No.	Name	Item Code	Remarks	Qty						
				4	6	8	12	42	62	12·4
192	Oil Cooler Assembly (refrigerant type, forward) 12B	CR18600-B12	12B/12WB (forward)	-	-	-	1	-	-	1
192	Oil Cooler Assembly (refrigerant type, reverse)	CR18600-RB	B, WB (reverse)	1	1	1	-	1	1	-
195	Gasket, End Cover A	CR18500-GA	T-FCF end cover A	-	1	1	-	1	1	-
196	Gasket, End Cover B	CR18500-GB	T-FCF end cover B	-	1	1	-	1	1	-
195	Gasket, End Cover A 12B Water Cooled	CR19500-BW12	12B, 12·4B water cooled	-	-	-	1	-	-	1
196	Gasket, End Cover B 12B Water Cooled	CR19600-BW12	12B, 12·4B water cooled	-	-	-	1	-	-	1
195	Gasket, End Cover A Direct Type N/A	CR19500-BDN	B refrigerant cooled	1	-	1	-	-	-	-
196	Gasket, End Cover B Direct Type N/A	CR19600-BDN	B refrigerant cooled	1	-	1	-	-	-	-
195	Gasket, End Cover A Direct Type N/A 12B	CR19500-BD12N	F12·4B refrigerant cooled	-	-	-	-	-	-	1
195	Gasket, End Cover B Direct Type N/A 12B	CR19600-BD12N	F12·4B refrigerant cooled	-	-	-	-	-	-	1
-	Gasket, Oil Cooler Mouth Piece	CR18800-ABN	A, WA, B, WB	-	1	1	1	1	1	1
190	Gasket, Oil Cooler Flange	CR19000-B	B, WB	-	1	1	1	1	1	1
-	Oil Cooler Zap, with Gasket	CR1929-B	B, WB	-	-	-	-	-	-	-
198	Thermometer and Case	LC1102312	I/45 0 + 100	-	-	-	-	1	1	2
198	Thermometer and Case	LC1103314	L/45 0 + 200	1	-	-	-	1	1	2
198	Thermometer and Case	LC1102314	I/45 0 + 200	-	1	1	1	-	-	-
199/ 201	Thermometer and Case	LC1103311	L/45 -50 + 50	1	-	-	1	-	-	1
199/ 201	Thermometer and Case	LC1102311	I/45 -50 + 50	-	1	1	-	1	2	-
205	Solenoid Valve	KF221-1	SX-7 100V	1	1	1	1	1	1	1
205	Solenoid Valve	KF221-2	SX-7 200V	1	2	3	1	1	1	1
205	Solenoid Valve	KF221-3	SX-7 220V	1	1	1	1	1	1	1
205	Solenoid Valve	KF221-4	SX-7 240V	1	1	1	1	1	1	1
205	Solenoid Valve	KF711-XOF1	SPOLAN XOF-120V	-	-	-	1	-	-	1
207	Manual Unloader Valve	NL142-NL	JO-5990	1	1	1	-	1	1	-
207	Manual Unloader Valve	NL142-NS	JO-6000 (NH3)	1	1	1	-	1	1	-
207	Manual Unloader Valve	CR71500	MV10-03G (Freon)	1	1	1	-	-	-	-
208	Eye Bolt	NB600-20	M20	-	2	2	-	2	2	-
208	Eye Bolt	NB600-24	M24	1	-	-	-	-	-	-
208	Eye Bolt	NB600-30	M30	-	-	-	2	-	-	2
213	External Safety Valve	CR21300-006P300	5602 3/4 300P	1	1	1	2	2	2	4
213	Safety Valve	KC02R013-040	KC02R013-040	-	-	-	-	-	1	-
213	Safety Valve	KC02R013-050	RTK SVF50A 1.31 MPa	-	-	1	-	-	1	-
213	Safety Valve	KC02R013-032	RTK SVF32A 1.31 MPa	-	-	-	-	1	-	-
213	Safety Valve	KC02R017-025	RTK SVF25A 1.72 MPa	-	-	-	-	1	1	-
213	Safety Valve	KC02R017-050	RTK SVF50A 1.72 MPa	-	-	1	-	-	-	-
234	Oval Flange for Water Cooled Head Cover	CR71800-1	HF-20	4	6	8	-	3	3	16

No.	Name	Item Code	Remarks	Qty						
				4	6	8	12	42	62	12·4
235	Gasket, Oval Flange for Water Cooled Head Cover	CR71900-1	HF-20	4	6	8	-	7	9	-
236	Oval Flange for Water Cooled Head Cover Fastening Bolt	NB17010-020	SUS M10×20	8	12	16	-	6	6	32
236	Oval Flange for Water Cooled Head Cover Fastening Bolt	NB17010-025	SUS M10×25	-	-	-	-	-	16	-
245	Oil Heater	LF1202-110	Cartridge heater MKCP-1102	-	-	1	1	-	-	1
245	Oil Heater	LF1202-220	Cartridge heater MKCP-2202	1	1	1	1	1	1	1
245	Thermo Heater	LF2202-110	Cartridge heater MKCP-T1102	-	-	1	1	-	-	1
245	Thermo Heater	LF2202-220	Cartridge heater MKCP-T2202	-	-	1	1	-	-	1
-	O-ring Set, F4B/6B/8B	CR7109-FB4		-	-	-	-	-	-	-
-	O-ring Set, F42B/62B	CR7109-FB6		-	-	-	-	-	-	-
-	O-ring Set, F12B	CR7109-FBA		-	-	-	-	-	-	-
-	O-ring Set, F12-4B	CR7109-FBB		-	-	-	-	-	-	-
-	O-ring Set, N4B/6B/8B	CR7109-NB4		-	-	-	-	-	-	-
-	O-ring Set, N42B/62B	CR7109-NB6		-	-	-	-	-	-	-
-	O-ring Set, N12B	CR7109-NBA		-	-	-	-	-	-	-
-	O-ring Set, N124B	CR7109-NBB		-	-	-	-	-	-	-
-	O-ring Set for WB Single Stage Machine	CR7109-WB1		-	-	-	-	-	-	-
-	O-ring Set for WB Two Stage Machine	CR7109-WB2		-	-	-	-	-	-	-
-	Gasket Set F6WB	CR7117-FB6		-	-	-	-	-	-	-
-	Gasket Set F8WB	CR7117-FB8		-	-	-	-	-	-	-
-	Gasket Set N4WB/F4WB	CR7117-NB4		-	-	-	-	-	-	-
-	Gasket Set N6WB	CR7117-NB6		-	-	-	-	-	-	-
-	Gasket Set N42WB/F42WB	CR7117-NB7		-	-	-	-	-	-	-
-	Gasket Set N8WB	CR7117-NB8		-	-	-	-	-	-	-
-	Gasket Set N62WB/F62WB	CR7117-NB9		-	-	-	-	-	-	-
-	Gasket Set N12WB/F12WB	CR7117-NBA		-	-	-	-	-	-	-
-	Gasket Set N12·4WB/ F12·4WB	CR7117-NBB		-	-	-	-	-	-	-
-	Gasket Set F6B	CR7118-FB6		-	-	-	-	-	-	-
-	Gasket Set F8B	CR7118-FB8		-	-	-	-	-	-	-
-	Gasket Set N4B/F4B	CR7118-NB4		-	-	-	-	-	-	-
-	Gasket Set N6B	CR7118-NB6		-	-	-	-	-	-	-
-	Gasket Set N42B/F42B	CR7118-NB7		-	-	-	-	-	-	-
-	Gasket Set N8B	CR7118-NB8		-	-	-	-	-	-	-
-	Gasket Set N62B/F62B	CR7118-NB9		-	-	-	-	-	-	-
-	Gasket Set N12B/F12B	CR7118-NBA		-	-	-	-	-	-	-
-	Gasket Set N124B/F124B	CR7118-NBB		-	-	-	-	-	-	-
-	Set of Consumables for Mechanical Seal	CR7129-NA	B/R	-	-	-	-	-	-	-
-	Set of Consumables for Mechanical Seal	CR7129-NB	B/NH3	-	-	-	-	-	-	-

No.	Name	Item Code	Remarks	Qty						
				4	6	8	12	42	62	12･4
-	Rod Bushing Attachment/Removal Tool A/B	CR70100-AB	A, WA, B, WB	-	-	-	-	-	-	-
-	Discharge Valve Disassembly Tool A/B	CR70200-AB	A, WA, B, WB	-	-	-	-	-	-	-
-	Disassembly Tool Set BM02	CR70400-BM02	B, WB	-	-	-	-	-	-	-
-	Disassembly Tool Set BM02/ME	CR70400-BM02ME	B, WB (for ME)	-	-	-	-	-	-	-

7.3 Configuration of Plate Valves and Associated Parts

This section lists the configuration of various types of suction/discharge valves and associated parts according to the different types of refrigerant. The item code for the spring in the table shows that of a set of the necessary number of springs.

Table 7-3 Component Parts for WA-type Suction Plate Valves

Refrigerant	High/Low Stage	Item Name	Specification	Item Code
NH_3	Single High	Valve Plate	WN	CR07300-NWA
		Spring	Type IV × 6	CR0729-WA4
		Plate Valve		CR07100-A
	Low	Valve Plate	N	CR07300-NA
		Spring	Type II × 6	CR0729-A2
		Plate Valve		CR07100-A
Freon and Propane	Single High	Valve Plate	WR	CR07300-FWA
		Spring	Type IV × 6	CR0729-WA4
		Plate Valve		CR07100-A
	Low	Valve Plate	N	CR07300-NA
		Spring	Type II × 6	CR0729-A2
		Plate Valve		CR07100-A

Table 7-4 Component Parts for WA-type Discharge Plate Valves

Refrigerant	High/Low Stage	Item Name	Specification	Item Code
NH_3	Single High	DV Cage	WCN	CR10900-WACN
		Spring	Type IV × 6	CR1169-WA4
		Plate Valve		CR11000-A
	Low	DV Cage	CN	CR10900-ACN
		Spring	Type III × 7	CR1169-A3
		Plate Valve		CR11000-A
Freon	Single High	DV Cage	WCR	CR10900-WACR
		Spring	Type IV × 8	CR1169-WA4
		Plate Valve		CR11000-A
	Low	DV Cage	SR	CR10900-ASR
		Spring	Type III × 7	CR1169-A3
		Plate Valve		CR11000-A
Propane	Single High/Low	DV Cage	WCR	CR10900-WACR
		Spring	Type IV × 8	CR1169-WA4
		Plate Valve		CR11000-A

Table 7-5 List of Component Parts for WB-type Suction Plate Valves

Refrigerant	High/Low Stage	Item Name	Specification	Item Code
NH_3	Single High	Valve Plate	WN	CR07300-NWB
		Spring	Type IV × 8	CR0729-WB4
		Plate Valve		CR07100-B
	Low	Valve Plate	N	CR07300-NB
		Spring	Type II × 9	CR0729-B2
		Plate Valve		CR07100-B
R22 R23	Single High	Valve Plate	WR	CR07300-FWB
		Spring	Type IV × 8	CR0729-WB4
		Plate Valve		CR07100-B
	Low	Valve Plate	R	CR07300-FB
		Spring	Type II × 9	CR0729-B2
		Plate Valve		CR07100-B
R134a, R404A, R507A	Single High	Valve Plate	WR	CR07300-FWB
		Spring	Type IV × 8	CR0729-WB4
		Plate Valve		CR07100-B
	Low	Valve Plate	WN	CR07300-NWB
		Spring	Type IV × 8	CR0729-WB4
		Plate Valve		CR07100-B
Propane	Single High	Valve Plate	WR	CR07300-FWB
		Spring	Type IV × 8	CR0729-WB4
		Plate Valve		CR07100-B
	Low	Valve Plate	N	CR07300-NB
		Spring	Type II × 9	CR0729-B2
		Plate Valve		CR07100-B

Table 7-6 Component Parts for WB-type Discharge Plate Valves

Refrigerant	High/Low Stage	Item Name	Specification	Item Code
NH_3	Single High	DV Cage	WCN	CR10900-WBCN
		Spring	Type IV × 12	CR1169-WB4
		Plate Valve		CR11000-B14
	Low	DV Cage	SN	CR10900-BSN
		Spring	Type III × 9	CR1169-B3
		Plate Valve		CR11000-B14
R22 R23	Single High	DV Cage	WCR	CR10900-WBCR
		Spring	Type IV × 12	CR1169-WB4
		Plate Valve		CR11000-B14
	Low	DV Cage	SR	CR10900-BSR
		Spring	Type III × 9	CR1169-B3
		Plate Valve		CR11000-B14
R134a, R404A, R507A	Single High	DV Cage	WCRH	CR10900-WBCRH
		Spring	Type IV × 12	CR1169-WB4
		Plate Valve		CR11000-SFW
	Low	DV Cage	SR	CR10900-BSR
		Spring	Type III × 9	CR1169-B3
		Plate Valve		CR11000-B14
Propane	Single High/Low	DV Cage	WCR	CR10900-WBCR
		Spring	Type IV × 12	CR1169-WB4
		Plate Valve		CR11000-B14

7.4 List of Tightening Torques for Bolts and Nuts

Table 7-7 Tightening Torques for Bolts and Nuts (WA-type)

No.	Item Name	Size	Tightening Torque	
			N·m	kg·cm
7	Pulley Set Bolt	M27×50 (P=1.5)	380	3800
10	Main Bearing Head Fastening Bolt	M12×40	80	800
11	Main Bearing Head Fastening Bolt	M12×120	80	800
16	CUNO Filter Cover Fastening Bolt	M10×30 P=1.5 (small head)	40	400
25	Bearing Head Fastening Bolt	M12×30 Hexagon Socket Head Cap Screw	80	800
28	Cover Plate Fastening Bolt	M12×80	80	800
31	Thrust Bearing Fastening Bolt	M10×30 (small head)	40	400
48	Hand Hole Cover Fastening Bolt	M12×40	80	800
52	Head Cover Fastening Bolt	M12×40	80	800
54	Head Jacket Cover Fastening Bolt	M10×25	40	400
60	Oil Pump Fastening Bolt	M10×30 (small head)	40	400
75	Discharge Cage Guide Fastening Bolt	M10×45 (P=1.0) (small head)	40	400
80	First Nut, Crank Pin Fastening	3/8"-24 UNF (special nut)	60	600
81	Second Nut, Crank Pin Fastening	3/8"-24 UNF (special nut)	45	450
113	First Nut, Discharge Valve Fastening	1/2"-20 UNF (special nut)	110	1100
114	Second Nut, Discharge Valve Fastening	1/2"-20 UNF (special nut)	80	800
123	Oil Strainer Cover Fastening Bolt	M10×30 (small head)	40	400
144	Push Rod Fastening Bolt	M10×20 (small head)	40	400
149	Unloader Piston Cover Fastening Bolt	M10×35	40	400
150	Unloader Piston Cover Fastening Bolt	W1/4×15 Hexagon Socket Head Cap Screw	-	-
153	Unloader Piston and Suction Cover Fastening Bolt	M10×35 for 8WA	40	400
163	Suction End Cover Fastening Bolt	M10×35 single stage machine	40	400
167	Oil Sight Gland Fastening Bolt	M10×30 (small head)	40	400
170	Discharge Elbow Fastening Bolt	M12×50 high-stage	80	800
170	Discharge Elbow Fastening Bolt	M12×80 high-stage	80	800
170	Discharge Elbow Fastening Bolt	M12×50 high-stage	80	800
170	Discharge Elbow Fastening Bolt	M16×80 high-stage	120	1200
170	Discharge Elbow Fastening Bolt	M16×55 low-stage	120	1200
170	Discharge Elbow Fastening Bolt	M20×60 for 8WA	220	2200
177	Scale Trap Fastening Bolt	M12×50	80	800
177	Scale Trap Fastening Bolt	M12×80	80	800
177	Scale Trap Fastening Bolt	M16×55 low-stage suction	120	1200
177	Scale Trap Fastening Bolt	M20×60	220	2200
181	Scale Trap Cover Fastening Bolt	M12×40	80	800
236	Oval Flange for Water Cooled Head Cover Fastening Bolt	SUS M10×25	40	400

Table 7-8 Tightening Torques for Bolts and Nuts (WB-type)

No.	Item Name	Remarks	Tightening Torque	
			N·m	kg·cm
7	Pulley Set Bolt	M27×50 (P=1.5)	380	3800
10	Main Bearing Head Fastening Bolt	SCM3, M16×40	120	1200
10	Main Bearing Head Fastening Bolt	S45C, M16×55	120	1200
16	CUNO Filter Cover Fastening Bolt	M10×30 P=1.5 (small head)	40	400
-	CUNO Filter Case Fastening Bolt	S45C M16×90	120	1200
25	Bearing Head Fastening Hexagon Socket Head Cap Screw	SCM3 M16×35	120	1200
25	Bearing Head Fastening Hexagon Socket Head Cap Screw	SCM3 M16×40	120	1200
28	Cover Plate Fastening Bolt	S45C M16×90	120	1200
31	Thrust Bearing Fastening Bolt	M12×35 40?	80	800
48	Hand Hole Cover Fastening Bolt	M16×55	120	1200
48	Hand Hole Cover Fastening Bolt	10.9T M16×60	120	1200
52	Head Cover Fastening Bolt	10.9T M16×45	120	1200
54	Head Jacket Cover Fastening Bolt	M10×25	-	-
60	Oil Pump Fastening Bolt	M12×35	80	800
60	Oil Pump Fastening Bolt	S45C M16×40	120	1200
75	Discharge Cage Guide Fastening Bolt	M12×60(P=1.25)	80	800
80	First Nut, Crank Pin Fastening	1/2-20 UNF (special nut)	120	1200
81	Second Nut, Crank Pin Fastening	1/2-20 UNF (special nut)	80	800
113	First Nut, Discharge Valve Fastening	5/8-18 UNF (special nut)	120	1200
114	Second Nut, Discharge Valve Fastening	5/8-18 UNF (special nut)	80	800
123	Oil Strainer Cover Fastening Bolt	M10×30 (small head)	-	-
126	Intermediate Shaft Bearing Fastening Bolt	8.8T M16×50	120	1200
133	Tapered Pin Fastening Nut	S45C M16	120	1200
144	Push Rod Fastening Bolt	M10×20 (small head)	-	-
149	Unloader Piston Cover Fastening Bolt	M10×35	40	400
150	Hexagon Socket Head Cap Screw, Unloader Piston Cover	SCM3 W1/4×15	-	-
163	Suction End Cover Fastening Bolt	S45C M12×40	80	800
167	Oil Sight Gland Fastening Bolt	M10×30 (small head)	40	400
170	Discharge Elbow Fastening Bolt	S45C M16×55	120	1200
170	Discharge Elbow Fastening Bolt	S45C M16×90	120	1200
170	Discharge Elbow Fastening Bolt	S45C M20×60	220	2200
177	Scale Trap Fastening Bolt	S45C M20×60	220	2200
177	Scale Trap Fastening Bolt	S45C M22×65	300	3000
181	Scale Trap Cover Fastening Bolt	M12×40	80	800
236	Oval Flange for Water Cooled Head Cover Fastening Bolt	SUS M10×20	40	400
236	Oval Flange for Water Cooled Head Cover Fastening Bolt	SUS M10×25	40	400

7.5 Criteria for Replacement of Parts

7.5.1 Filters and the Like

When cleaning the wire mesh, check for any broken mesh or separation of soldered parts. If any defect is found, be sure to repair it or replace it with a new one.

[POINT]

- Soldering of stainless steel parts requires the use of a special flux.

- If any foreign matter is caught in the fine mesh and cannot be removed, use compressed air to blow it out from the downstream side of the liquid flow.
- The suction strainer/oil strainer is a corrugated cylindrical filter with a wide area of passage. If any clogging is found, use compressed air to blow it out from the inside of the filter element.
- If any clogging is found in the external oil filter, replace the filter element.
- For the CUNO filter, check that it can smoothly spin and that the scraper plate is functioning perfectly. If it cannot spin smoothly, remove any foreign matter between plates one by one, using a thin plate (e.g., razor-blade).

7.5.2 Crankshaft

CAUTION

- **Padding of the crankshaft cannot be made due to the nature of the material. Any padding (e.g., by welding or plating) can cause the crankshaft to break.**

a) Check that each bearing point of the crankshaft is not excessively worn. A significant wear will develop a step between the sliding part and the non-sliding part of the bearing. Check for any step visually or by touching the surface.

b) Use a micrometer to measure the shaft diameter at various worn points of the bearings. If the measured diameter is less than the limit shown in the table below, replace the crankshaft.

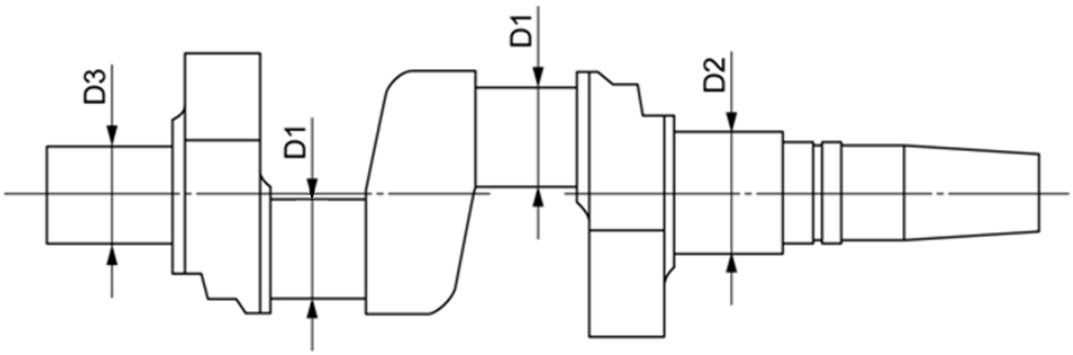

(mm)

Measurement Point		WA-type		WB-type	
		Nominal Dimension	Use Limit	Nominal Dimension	Use Limit
Crank pin	D1	70	69.85	90	89.82
Thrust bearing	D2	82.5	82.40	112	111.85
Main bearing	D3	67	66.90	92	91.85

c) Check that there is no flaw on each sliding surface of the crankshaft. If any flaw is found, use a piece of sand paper (#800 or finer) or grind stone to correct the flaw.

d) Remove all plugs attached to the crankshaft and clean the oil holes. After they have been cleaned, check that oil can flow through the holes. Attach each plug as soon as the check is done. Missing to attach any plug can result in a seizure accident due to insufficient oil pressure.

e) Check that the shaft seal attachment portion of the crankshaft is free from any flaw. If any flaw is found, use a piece of sand paper (#800 or finer) or fine oilstone to correct the flaw.

7.5.3 Connecting Rod

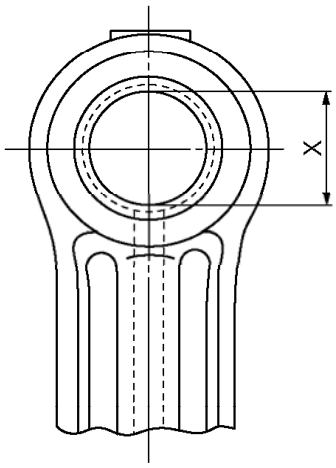

■ **Roll bushing**

Measure the inner diameter of the small end hole of the connecting rod. If the measured inner diameter exceeds the use limit, replace the roll bushing.

(mm)

Measurement Point	WA-type		WB-type	
	Nominal Dimension	Use Limit	Nominal Dimension	Use Limit
X in the right figure	25.15	25.25	40.0	40.10

■ **Needle bearing**

Needle bearings must always be replaced at each overhaul. When replacing the needle bearing, use a special tool to press fit, by fitting a metal block on the side of the bearing marking, for not to deform the outer ring.

CAUTION
● **Never use a hammer to drive in the bearing, as it can damage the needle bearing.**

■ **Bearing halves**

a) Check the sliding surface of the large end bearing halves. If any foreign matter is found, replace the bearing halves. In particular, if the crank shaft is worn, pay very careful attention to the surface of the metal upon inspection.

b) Also be careful about the tension of the bearing halves. The internal radius of the bearing halves is larger than the internal radius of the large end of the connecting rod, when they are manufactured. As it is designed to make a perfect circle only after the top and bottom halves are combined together and tightened, the measurement between the ends of disassembled bearing halves should become longer due to the tension. If this tension is not present, replace the bearing halves even if they are not worn.

c) Measure the thickness of the bearing halves at the central point. If the thickness is less than the use limit, replace the bearing halves.

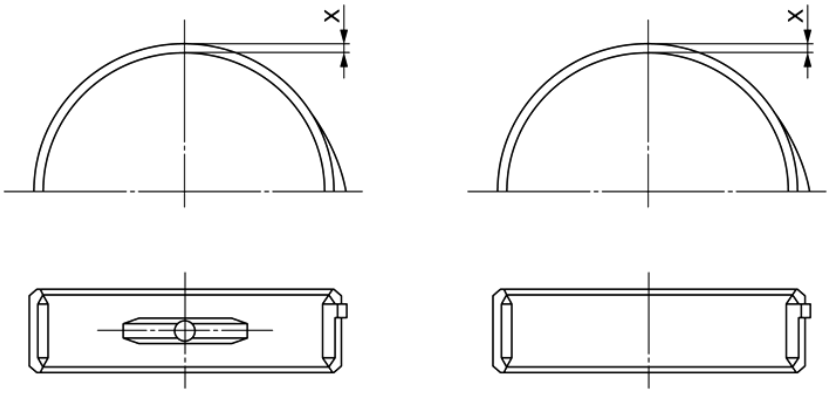

(mm)

Measurement Point	WA-type		WB-type	
	Nominal Dimension	Use Limit	Nominal Dimension	Use Limit
X in the above figure	2.47	2.37	3.46	3.31

7.5.4 Piston, Piston Pin, and Piston Ring

a) Check the piston for any flaw mainly on the outer surface. If any flaw is present, correct it using a grindstone. The direction of grinding shall be perpendicular to the sliding direction. Measure the outer diameter of the piston skirt. If the measured diameter is less than the use limit, replace the piston.

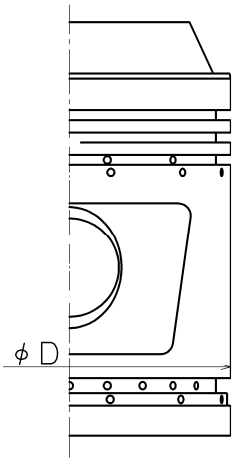

(mm)

Measurement Point	Use Limit	
	WA-type	WB-type
Outer diameter at D	94.75	129.63

b) Measure the outer diameter of the piston at three places.
If any of the measured outer diameters is less than the use limit, replace the piston.

(mm)

Measurement Point	Use Limit	
	WA-type	WB-type
Outer diameter	25.08	39.90

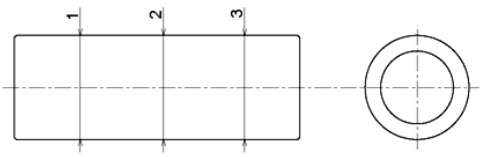

c) For piston rings, besides checking the condition of the outer sliding surface including any flaw or abnormal wear, check the normal wear at the same time.

To check the condition of wear, measure the gap between both ends of the piston ring. For this, place the piston ring at a distance of 3 mm from the top of the cylinder sleeve and measure the gap. If the measured gap exceeds the use limit, replace the piston ring.

(mm)

Measurement Point	WA-type		WB-type	
	Nominal Dimension	Use Limit	Nominal Dimension	Use Limit
Gap between both ends	0.5	1.5	0.7	2.0

[POINT]

- The piston rings must be regularly replaced according to the recommended use period even if the wear is within the use limit.

d) If any burr (circular ridge) is formed on the top and bottom of the sliding surface of the piston ring, use a grind stone or other tool to chamfer the edges before using it.

Depending on the use condition, the piston ring grooves may also be worn. If the groove has become considerably wide, i.e., if a 0.1 mm thickness gauge can be inserted to the groove with a new ring, replace the piston as it can cause oil loss.

7.5.5 Cylinder Sleeve

a) Inspect the upper surface of the suction valve seat. If any flaw is found, correct the flaw by polishing or grinding. As the top clearance will change due to the correction, add the required number of cylinder sleeve gaskets for the corrected amount. The thickness of each cylinder sleeve gasket is 0.1 mm.

b) Measure the height of the seat portion. If it exceeds the use limit, replace the sleeve.

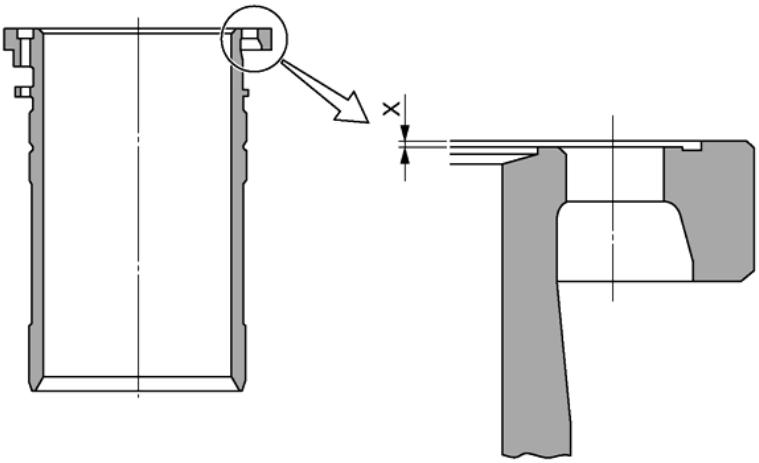

(mm)

Measurement Point	Use Limit	
	WA-type	WB-type
X in the above figure	0.15	0.15

c) If the inside surface of the cylinder sleeve has any flaw, use fine GC (green carbonite) grinding stone or fine sandpaper to correct the defect.

d) The top 3 mm of the cylinder sleeve will not be worn. The most significant wear will occur at about 5 to 7 mm from the top. Measure the inside diameter of the cylinder, and replace it if it exceeds the use limit.

(mm)

Measurement Point	WA-type		WB-type	
	Nominal Dimension	Use Limit	Nominal Dimension	Use Limit
Internal diameter of cylinder sleeve	95	95.10	130	130.15

[**POINT**]

- When you see the inside surface of the cylinder by reflecting light, it will look like a rainbow when the condition is good.

7.5.6 Discharge Valve Assembly/Suction Valve Assembly

The discharge valve, suction valve, and valve springs must be regularly replaced.
While the service life depends on the conditions of use, refer to Chapter 5, Section 5.2.3.1 of this manual for the typical replacement period.

a) Measure the thickness of the seat portion (M). If the wear on the seat portion exceeds 0.1 mm, the valve needs to be replaced even if it has not reached the typical replacement period.

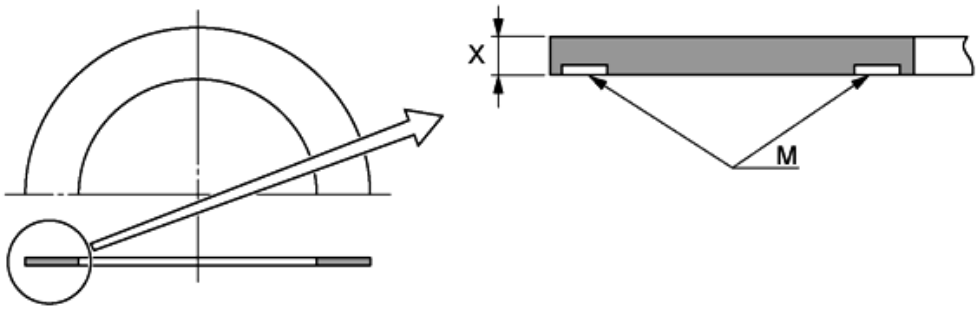

(mm)

Measurement Point	WA-type		WB-type	
	Nominal Dimension	Use Limit	Nominal Dimension	Use Limit
X in the above figure	1.3	1.2	1.4	1.3

b) Even if the seat portion is not excessively worn, replace the valve if the spring mating surface is unevenly worn or distorted. If any flaw exists, it should be replaced as it may develop a crack due to cyclic fatigue.

c) Regarding the inspection of springs, if any broken spring is found, also check the bottom of the spring hole of the valve plate and cage. A broken spring can hit the bottom of the hole to make it sink.

d) Measure the seat height of the valve plate and discharge valve seat. If the seat height is less than 0.1 mm, replace the valve plate and discharge valve seat.

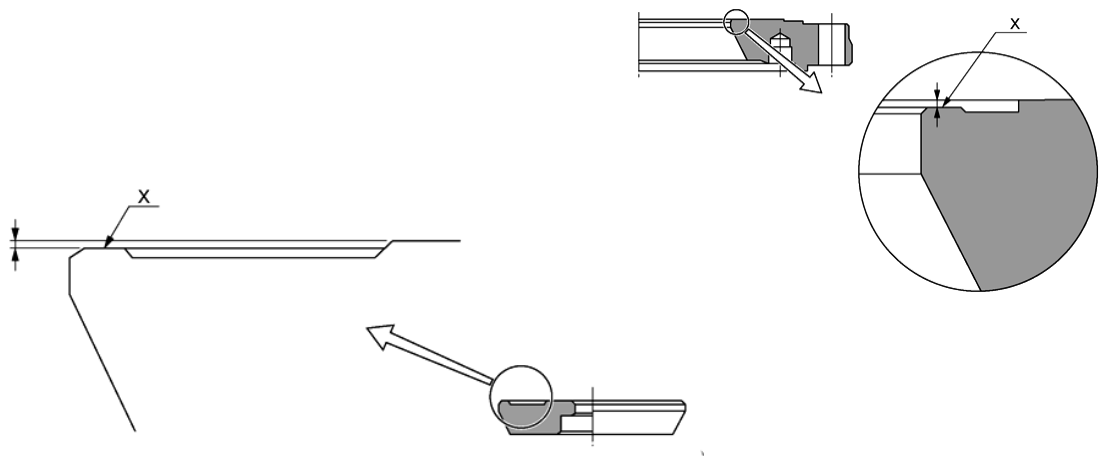

7.5.7 Main Bearing and Thrust Bearing

Measure the internal diameter of the main bearing and thrust bearing. If the use limit is exceeded, replace it.

(mm)

Measurement Point	Use Limit	
	WA-type	WB-type
Main bearing	67.15	92.18
Thrust bearing	82.65	112.18

[**POINT**]

- When belt drive is used, the thrust bearing on the motor side can be easily worn. As such, be careful not to apply excessive tension of the V-belts.

7.5.8 Shaft Seal

Inspect the sliding surface of the stationary ring and rotating ring.
Although the shaft seal assembly is to be replaced after any abnormality is found by the inspection, because only visually checking the sliding surface may be insufficient in determining any abnormality, it is recommended to replace the seal assembly with a new one in such a case, as in the case of O-rings.
The O-rings must always be replaced with new ones.

7.5.9 Oil Pump

If the oil pressure is still low when the oil pressure control valve is closed during operation, and it is not due to the clogging of the oil filter, the gear, metal, and/or shaft of the oil pump may be worn.

Remove the oil pump from the compressor. Then, hold the pump shaft and check if there is any play in the axial and/or lateral direction. If any play is found, replace the oil pump assembly.

7.5.10 Bolts and Other Hardware

The crank pin fastening bolts and discharge valve fastening bolts must be carefully and thoroughly inspected. In particular, these bolts must be very carefully checked after any oil hammering, liquid hammering, or seizure accident. If any defect is found on the thread, be sure to replace it.

7.5.11 Gaskets and O-rings

All gaskets and O-rings must be replaced with new ones whenever disassembly and inspection is performed.

While synthetic rubbers are used for O-rings, the O-rings of different material may be used according to the type of the refrigerant, lubricant, and operating conditions. For details, please contact one of our sales offices or service centers.

■ Gaskets

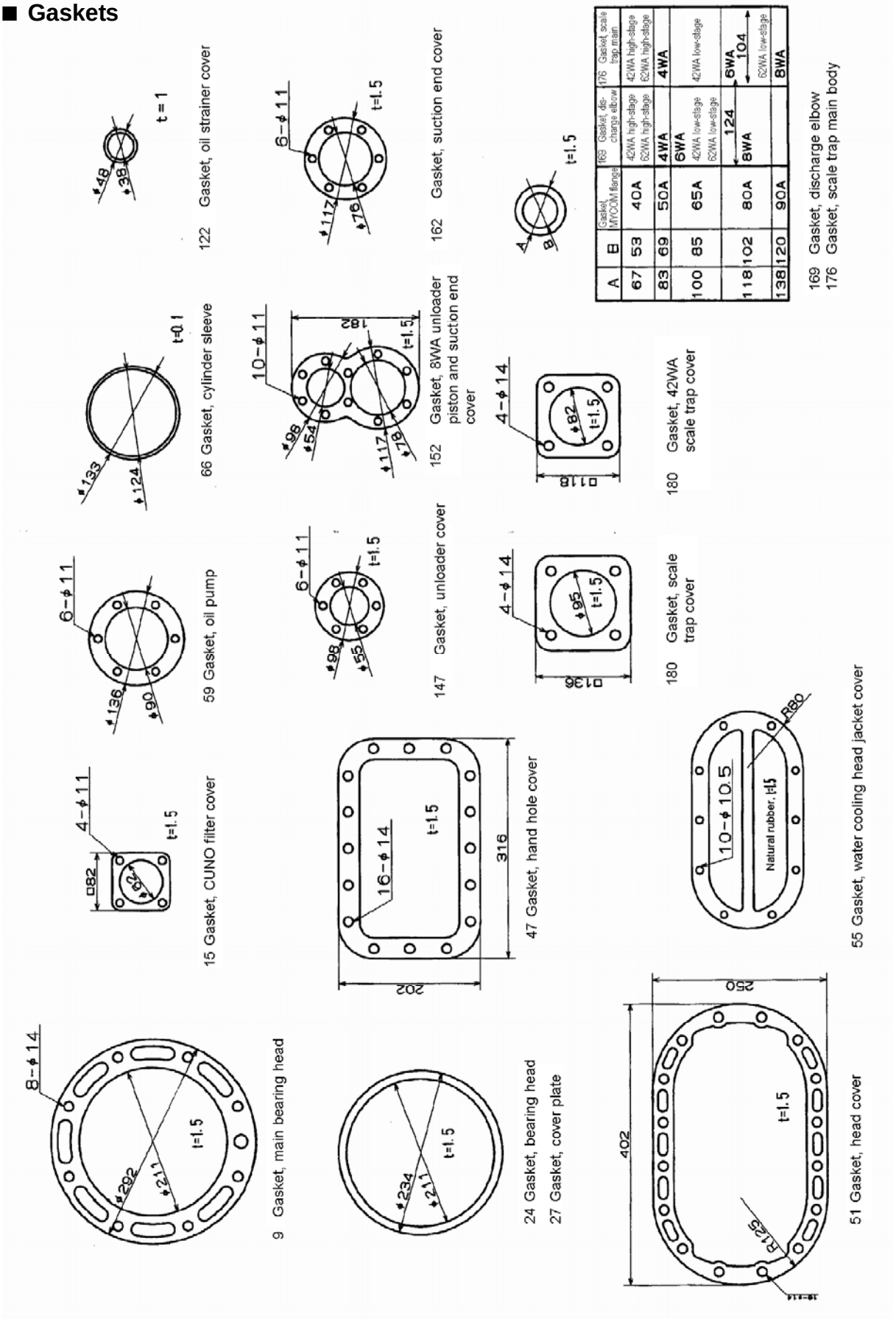

A	B	Gasket, MYCOM flange	169 Gasket, discharge elbow	176 Gasket, scale trap main
67	53	40A	42WA high-stage 62WA high-stage	42WA high-stage 62WA high-stage
83	69	50A	4WA	4WA
100	85	65A	6WA 42WA low-stage 62WA low-stage	42WA low-stage
118	102	80A	124 8WA	6WA 104 62WA low-stage
138	120	90A		8WA

Figure 7-5 Gaskets for WA-type Compressors

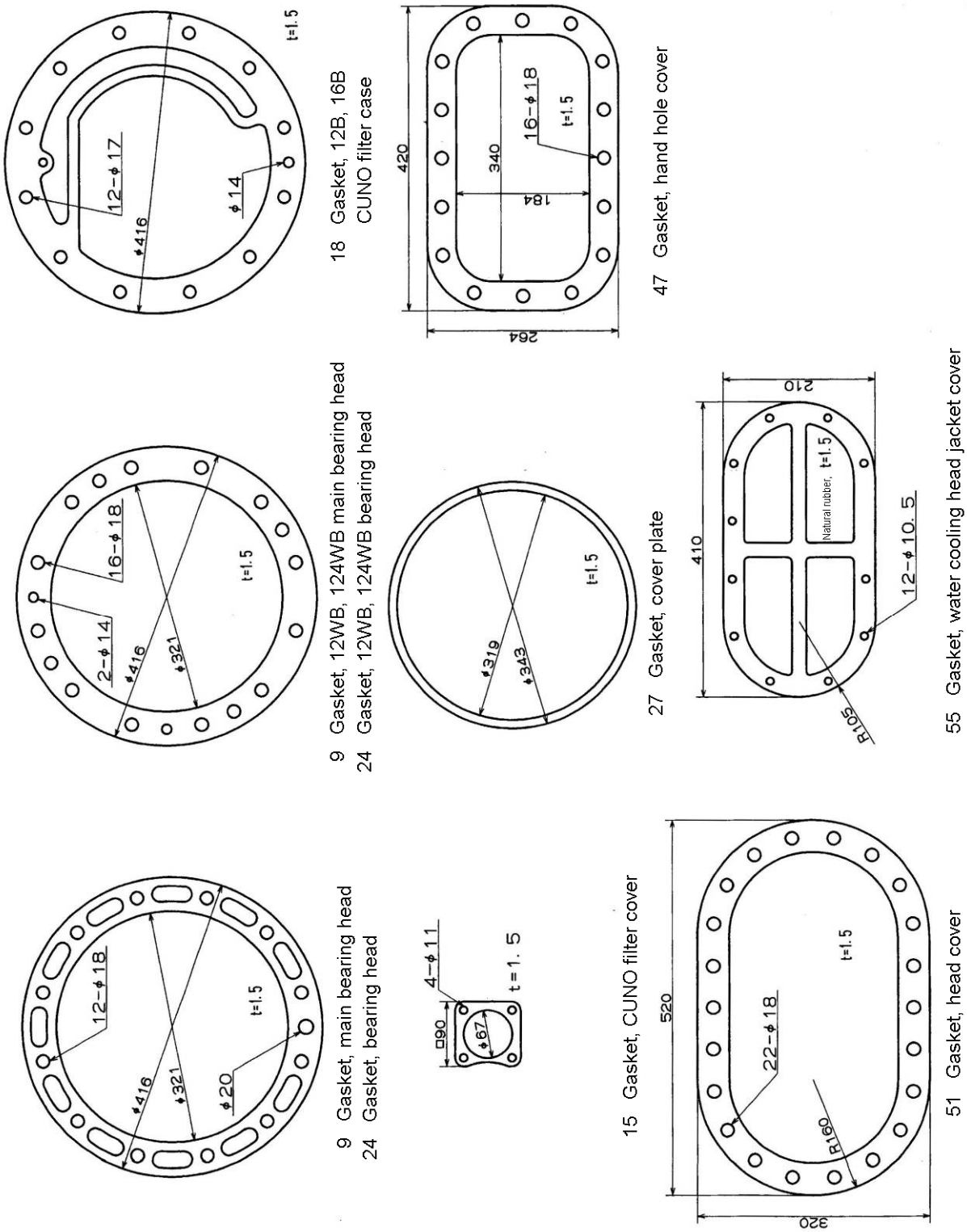

Figure 7-6 Gaskets for WB-type Compressors (1/2)

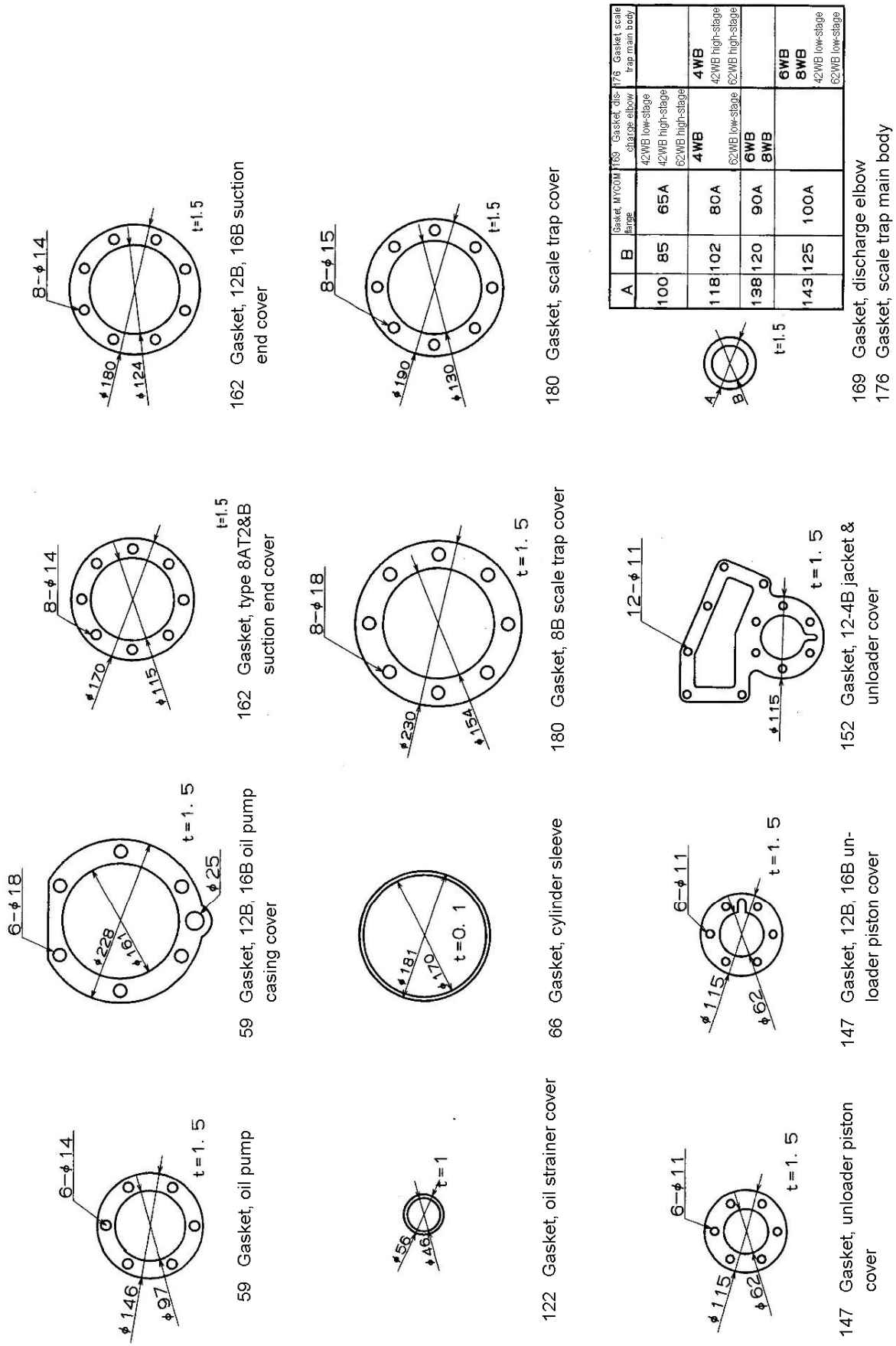

A	B	Gasket, MYCOM flange	169 Gasket, discharge elbow	176 Gasket, scale trap main body
100	85	65A	42WB low-stage 42WB high-stage 62WB high-stage	
118	102	80A	4WB 62WB low-stage	4WB 42WB high-stage 62WB high-stage
138	120	90A	6WB 8WB	
143	125	100A		6WB 8WB 42WB low-stage 62WB low-stage

Figure 7-7 Gaskets for WB-type Compressors (2/2)

7.6 Standard Assembly Clearance

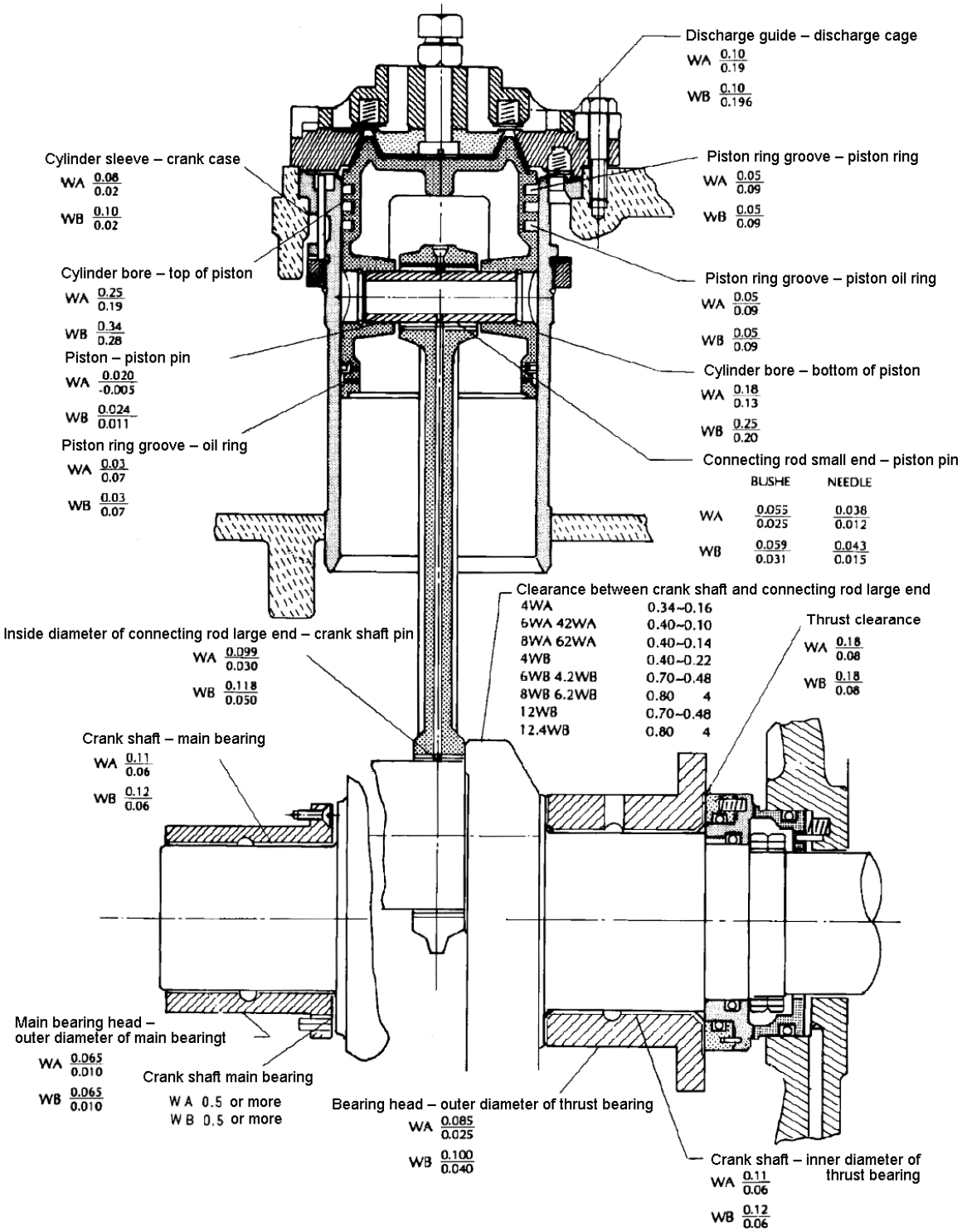

Figure 7-8 Standard Initial Assembly Clearance for WA/WB Type Compressors

7.7 Vibration Criteria

■ Vibration criteria and their application

The vibration assessment criteria are used to evaluate the vibration level of the reciprocating compressor installed in the unit. Note that these criteria are applicable only when the pedestal, any pipe line, or other parts are not mechanically resonated when the compressor is running at the rated speed.

■ Measurement point

Compressor: Any point near the shaft bearing opposite to the loading side (at the oil pump) shall be used, for measuring the vibration in the three mutually perpendicular directions, i.e., vertical, horizontal and axial directions.

■ Vibration velocity criteria

- The vibration severity is defined by the rms (root-mean-square) value of the vibration velocity (mm/s min^{-1}).
- The class is determined by the rated power of the motor that drives the compressor.
- It is applicable to both the belt drive and direct drive systems.
- If the vibration severity is to be represented by the displacement (D: μm P-P), use the following conversion formula:

  $D = 30000 \times \sqrt{2} \div (\pi N) \cdot Vrms$

  (N: rotation speed in min^{-1}, V min^{-1}: Vibration severity represented by the vibration speed - mm/s min^{-1})
- If the vibration performance is in the region of A or B, there should be no particular problems.
- If it is in the region of C, the action to take shall be determined through discussion between the parties concerned.
- If it is in the region of D, immediately stop the operation and perform investigation.

Table 7-9 Vibration Velocity Criteria (mm/s min^{-1})

A: Excellent, B: Good, C: Caution, D: Unacceptable

Vibration severity range		Motor rated power					
		Fixed base			Anti-vibration base		
Class	Vibration velocity rms (mm/s min^{-1})	Less than 50 kW	50 to 100 kW	100 kW or higher	Less than 50 kW	50 to 100 kW	100 kW or higher
1.1	1.12	A/B	A/B	A/B	A/B	A/B	A/B
1.8	1.78						
2.8	2.82						
4.5	4.46						
7.1	7.07	C					
11	11.2		C		C		
18	17.8	D		C		C	
28	28.2		D		D		C
45	44.6			D		D	
71	70.7						D

7.8 Disassembly Tools

The following table 7-10 lists the items included in the disassembly tool set listed in Table 7-1 "Parts for WA-type Compressors" and Table 7-2 "Parts for WB-type Compressors" in this chapter. (Item codes are CR70400-AM02 for WA-type and CR70400-BM02 for WB-type compressors.)

Table 7-10 Items Included in the Disassembly Tool Set

Name	Outline	Specification	Qty		Remarks
			WA	WB	
Socket wrench		WAF 14 mm	1	1	
		17 mm	1	1	
		19 mm	1	1	
		21 mm long	-	1	
		24 mm	-	1	
		24 mm long	-	1	
Nut spinner handle		300 mm 12.7 square drive	1	1	
Hexagon wrench		WAF 5 mm	1	1	For unloader cover and bearing head cover
		10 mm	1	-	
		14 mm	-	1	
Double ended wrench		14 - 17 mm	1	1	
		17 - 19 mm	1	1	
Pulley extractor	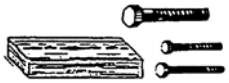	Bolts M20×10 M12×70	1	1	
Lock nut wrench (MYCOM special)		270 mm	1	-	For shaft seal collar
		320 mm	-	1	
Eye bolt		1/4”	1	1	For piston and unloader piston
		5/16”	-	1	
Adjustable wrench		250 mm	1	1	
Extension bar		152 mm	1	-	
		250 mm	-	1	
DV disassembly tool (MYCOM special)	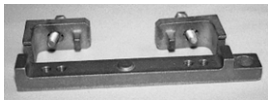	For Type A	1	-	With two bolts
		For Type B	-	1	With two bolts

Name	Outline	Specification	Qty		Remarks
			WA	WB	
Ratchet handle		1/4”	1	1	For JO valve and oil pressure control valve
Stud bolt		M12×70	1	-	For head cover
		M16×60	-	1	
Sponge		20×160×160 mm	1	1	For cleaning
Hose		φ15×20×750 mm	1	1	For supplying lubricant

Table 7-11 Other Recommended Tools (for reference only)

Name	Outline	Specification	Qty		Remarks
			WA	WB	
Torque wrench		20 - 50 N·m	1	1	
		50 - 200 N·m	1	1	
		200 - 500 N·m	1	1	
Outside micrometer		0 - 25 mm	1	1	For WB-type. It is recommended to prepare a complete set as shown in the outline.
		25 - 50 mm	1	1	
		75 - 100 mm	1	1	
		100 - 125 mm	-	1	
		125 - 150 mm	-	1	
Cylinder gauge		50 - 150 mm	1	1	
		100 - 160 mm	-	1	
Vernier caliper		0 - 150 mm	1	-	
		0 - 200 mm	-	1	
Thickness gauge		0.04 - 0.30×100	1	1	

Contact Information

How to Order MYCOM Genuine Parts

Confirm the target parts by referring to 7.1 "Development View of Parts" and 7.2 "Parts Configuration Table" in Chapter 7 "Related Documents" of this manual.
Please inform the Model Name and Serial Number, Part Name, Cord No., and required quantity to our local sales offices or service centers.
When you need more information about the compressor or have questions, apart from the ordering of parts, please contact our sales offices or service centers.

Sales Offices/Service Centers

■ Sales Offices in Japan (as of April 10, 2014)

Description	Location	Phone/Fax
Head Office	3–14–15 BOTAN KOTO-KU, TOKYO 135-8482	TEL: 03-3642-8181 FAX: 03-3643-7094
Hokkaido Branch	2-5-1, 3-JYO NIJYUUYONKEN NISHI-KU, SAPPORO-CITY, HOKKAIDO 063-0803	TEL: 011-631-2052 FAX: 011-631-2053
Tohoku Branch	8-72, ROKUTYONO-MEMINAMI-MACHI, WAKABAYASHI-KU, SENDAI-CITY, MIYAGI 984-0013	TEL: 022-288-5001 FAX: 022-288-5155
Kanto Branch	3–14–15 BOTAN, KOTO-KU, TOKYO 135-8482	TEL: 03-3642-8968 FAX: 03-3641-8468
Chubu Branch	2-9-6, MARUNOUCHI, NAKA-KU, NAGOYA CITY, AICHI 460-0002	TEL: 052-218-3307 FAX: 052-218-3308
Kansai Branch	1-4-27, EBIE, FUKUSHIMA-KU, OSAKA CITY, OSAKA 553-0001	TEL: 06-4795-6000 FAX: 06-4795-6033
Chushikoku Branch	2-3-40, TAKAYADAI, HIGASHIHIROSHIMA CITY, HIROSHIMA 739-2117	TEL: 082-491-1830 FAX: 082-491-1838
Kyushu Branch	FUKUOKA-FUJILAND-BUILD. 10F, 2-3, NAKASHIMA-MACHI, NAKASU, HAKATA-KU, FUKUOKA CITY, FUKUOKA 810-0802	TEL: 092-262-0016 FAX: 092-262-0115

■ Manufacturing Bases in Japan (as of April 10, 2014)

Description	Location	Phone/Fax
Moriya Plant	2000, TATSUZAWA MORIYA-CITY, IBARAKI 302-0118	TEL: 0297-48-1361 FAX: 0297-48-5269
Higashi-Hiroshima Plant	2-3-40, TAKAYADAI, HIGASHIHIROSHIMA CITY, HIROSHIMA 739-2117	TEL: 082-491-1828 FAX: 082-491-1838

■ Global Network (as of April 10, 2014)

Description	Location	Telephone and facsimile No.
NORTH AMERICA		
MAYEKAWA CANADA INC. (VANCOUVER OFFICE)	12180 RIVERSIDE WAY, RICHMOND, B.C., V6W 1K5, CANADA	TEL: (1) 604-270-1544 FAX: (1) 604-270-9870
MAYEKAWA CANADA INC. (TORONTO OFFICE)	1745 BONHILL ROAD, UNIT #6&7 MISSISSAUGA, ONTARIO, L5T 1C1, CANADA	TEL: (1) 905-564-0664 FAX: (1) 905-564-7614
MAYEKAWA CANADA INC. (CALGARY OFFICE)	4525 6A STREET N.E., CALGARY, ALBERTA, T2E 4B2, CANADA	TEL: (1) 403-250-1554 FAX: (1) 403-250-1504
MAYEKAWA U.S.A. INC. (CHICAGO OFFICE)	1850 JARVICE AVENUE, ELK GROVE VILLAGE, IL 60007, U.S.A.	TEL: (1) 773-516-5070 FAX: (1) 773-516-5071
MAYEKAWA U.S.A. INC. (NEW YORK OFFICE)	250 WEST NYACK ROAD,SUITE 230,WEST NYACK, NY 10994, U.S.A.	TEL: (1) 914-301-9770 FAX: (1) 914-332-0400
MAYEKAWA U.S.A. INC. (HEAD QUARTERS) (NASHVILLE PLANT)	130 SMART PARK DRIVE, LEBANON, TN 37090, U.S.A.	TEL: (1) 615-773-2859 FAX: (1) 615-444-1995
MAYEKAWA U.S.A. INC. (LA OFFICE)	19475 GRAMERCY PLACE, TORRANCE, CA 90501, U.S.A.	TEL: (1) 310-328-1362 FAX: (1) 310-782-6759
MAYEKAWA U.S.A. INC. (SEATTLE OFFICE)	2615 W CASINO ROAD, UNIT-3D, EVERETT, WA 98204, U.S.A.	TEL: (1) 425-645-9400 FAX: (1) 425-353-3344
MAYEKAWA U.S.A. INC. (PORTLAND OFFICE)	4700 SW MACADAM AVENUE, SUITE 201 PORTLAND, OREGON 97239, U.S.A.	TEL: (1) 971-230-1795 FAX: (1) 503-224-9259
MAYEKAWA U.S.A. INC. (COVINA OFFICE)	1272 CENTER COURT DR, SUITE 106, COVINA, CA 91724, U.S.A.	TEL: (1) 626-598-5030 FAX: (1) -
MAYEKAWA U.S.A.INC. (SAN ANTONIO OFFICE)	1219 SAFARI, SAN ANTONIO, TX 78216, U.S.A.	TEL: (1) 210-599-4536 FAX: (1) 210-599-4538
MAYEKAWA U.S.A. INC. (YORK OFFICE)	3395 FARMTRAIL ROAD YORK, PA 17406, U.S.A.	TEL: (1) 717-779-0138 FAX: (1) 717-779-0109
MAYEKAWA U.S.A. INC. CHEMICAL PROCESS DIVISION (LA OFFICE & MANUFACTURING)	19475 GRAMERCY PLACE, TORRANCE, CA 90501, U.S.A.	TEL: (1) 310-328-6279 FAX: (1) 310-328-8487
MAYEKAWA U.S.A. INC. CHEMICAL PROCESS DIVISION (HUSTON SERVICE OFFICE)	3222 PASADENA FREEWAY PASADENA, TX 77503, U.S.A.	TEL: (1) 281-447-2599 FAX: (1) 281-447-6623
EUROPE / AFRICA		
N.V.MAYEKAWA EUROPE S.A. (HEAD OFFICE, FACTORY)	LEUVENSESTEENWEG 605, 1930 ZAVENTEM, BELGIUM	TEL: (32) 2-757-9075 FAX: (32) 2-757-9023
MAYEKAWA DEUTSCHLAND GMBH	UNTER-BOHNHOF-STRASSE 38A, D-82110 GERMERING, DEUTSCHLAND	TEL:(49) 89-5527-989-0 FAX:(49)89-5527-989-19

Description	Location	Telephone and facsimile No.
MAYEKAWA DEUTSCHLAND GMBH (HUMBURG OFFICE)	WEIDESTRASSE 122A, 22083 HAMBURG, DEUTSCHLAND	TEL:(49)40-2788-9149-0 FAX:(49)40-2788-9149-9
N.V.MAYEKAWA EUROPE S.A.(UK)	16 OAKHURST GARDENS, BEXLEYHEATH, KENT DA7 5JP, UNITED KINGDOM	TEL: (44) 1322-433558 FAX: (44) 1322-433164
MAYEKAWA. S.L.	CALLE MONTEVIDEO 5, NAVE 13 POL. INDUSTRIAL CAMPORROSO 28806 ALCALA DE HENARES, MADRID, SPAIN	TEL: (34) 91-830-0392 FAX: (34) 91-830-0397
MAYEKAWA FRANCAISE SARL	9, RUE MICHAEL FARADAY, 78180 MONTIGNY-LE-BRETONNEUX, FARNCE	TEL: (33) 1-30-58-26-00 FAX: (33) 1-30-58-19-37
MAYEKAWA MFG. CO., LTD. MOSCOW LIAISON OFFICE	KOROVY VAL ST., 7, OFFICE 228, 119049, MOSCOW,RUSSIA	TEL: (7) 499-230-01-76 FAX: (7) 499-230-21-12
MAYEKAWA INTERTEC AG	ROSENBERGSTRASSE 31, CH-6300 ZUG, SWITZERLAND	TEL: (41) 41-726-8626 FAX: (41) 41-726-8620
MAYEKAWA INTERTEC AG - EGYPT	P.O.BOX 341 NEW CAIRO - 5th SETTLEMENT, NORTH 90th St. THE 47th BUILDING - 4th FLOOR, OFFICE 419, EGYPT	TEL: (20) 22-503-2925 FAX: (20) 22-503-2801
MAYEKAWA MIDDLE EAST FZCO	P.O.BOX 61349, PBU: RA08-UC05, JEBEL ALI FREE ZONE, DUBAI, U.A.E.	TEL: (971) 4-888-6363 FAX: (971) 4-888-6373
MAYEKAWA TURKEY SOGUTMA SANAYI VE TICARET LIMITED SIRKETI	ISTANBUL DUNYA TICARET MERKEZI A-2 BLOK KAT 10 No:325 YESILKOY 34149, ISTANBUL, TURKEY	TEL: (90) 212-4653631 FAX: (90) 212-4653635
N.V. MAYEKAWA EUROPE S.A. （BULGARIA）	24,KAMEN ANDREEV STR. 1303, SOFIA, BULGARIA	TEL: (359) 2-8910130 FAX: (359) 2-8910131
MAYEKAWA ITALIA S.R.L. （MILANO OFFICE）	VIA RICCARDO LOMBARDI 19/12, 20153 MILANO, ITALY	TEL: (39) 02-4892-9159 FAX: (39) 02-453-1728
MAYEKAWA ITALIA S.R.L. （BOLOGNA OFFICE）	VIA PRADAZZO 7,40012 CALDERARA DI RENO, BOLOGNA, ITALY	TEL: (39) 051-726-364 FAX: (39) 051-726-804
MAYEKAWA SOUTH AFRICA (PTY) LTD. （CAPE TOWN OFFICE）	WEST END, UNIT 3 PRIME PARK, PRINTERS WAY, MONTAGUE GARDENS 7441, REPUBLIC OF SOUTH AFRICA	TEL: (27) 21-551-1434 FAX: (27) 86-546-3618
ASIA PACIFIC		
MAYEKAWA AUSTRALIA PTY.LTD.	UNIT 2, 44 MCCAULEY STREET MATRAVILLE NSW 2036, AUSTRALIA	TEL: (61) 2-9695-7000 FAX: (61) 2-9695-7001
MAYEKAWA AUSTRALIA PTY. LTD.(NEW ZEALAND OFFICE)	UNIT 2, 30 TUI STREET, OTAHUHU, AUCKLAND 2024, NEW ZEALAND	TEL: (64) 9-276-2305 FAX: (64) 9-276-2306
MAYEKAWA INDIA PVT.LTD. (GURGAON OFFICE)	545, 1st FLOOR, SECTOR-20,VILLAGE DUNDAHERA GURAGAON-122016, HARYANA, INDIA	TEL: (91) 12-4651-0181 FAX: (91) 12-4651-0188
MAYEKAWA INDIA PVT.LTD. (CHENNAI FACTORY)	RS No.225/226/238,NAYAPAKKAM VILLAGE, PUDDUVALLUR PANCHAYAT, VALARPURAM POST THIRUVALLUR DISTRICT, TAMIL NADU 602105, INDIA	TEL: (91) 92-8258-2508 FAX: -

Description	Location	Telephone and facsimile No.
MAYEKAWA INDIA PVT. LTD. (KOLKATA OFFICE)	OMER MANSION, ROOM No. 2c, 3RD FLOOR, 29 A WESTON STREET, KOLKATA, WEST BENGAL 700012, INDIA	TEL: (91) 33-40038043 FAX: (91) 33-40038044
MAYEKAWA INDIA PVT. LTD. (JALANDHAR OFFICE)	SHOP NO. 3, OPP. TV TOWER, NIKODAR ROAD, JALANDHAR, PUNJAB 144201, INDIA	TEL: (91) 9711303865 FAX: —
MAYEKAWA INDIA PVT. LTD. (AGRA OFFICE)	CS-9 SECOND FLOOR, RASHMI PALACE, SULTAN GANJ KI PULIA, KAMLA NAGAR, AGRA, U.P. 282005, INDIA	TEL: (91) 89-5450-2937 FAX: (91) 97-1130-3865
P.T.MAYEKAWA INDONESIA	GRAHA PRATAMA BUILDING, 9TH FLOOR JL. M.T. HARYONO KAV.15 JAKARTA 12810, INDONESIA	TEL: (62) 21-8370-9484 FAX: (62) 21-8370-9483
P.T.MAYEKAWA INDONESIA (MEDAN OFFICE)	JL. SUTRISNO No.274 MEDAN-20215, INDONESIA	TEL: (62) 61-7323627 FAX: (62) 61-7358848
P.T.MAYEKAWA INDONESIA (SURABAYA OFFICE)	BUMI MANDIARI BUILDING, 7TH FLOOR SUITE 702B, JL. JEND. BASUKI RACHMAT No. 129-137, SURABAYA-INDONESIA	TEL: (62) 31-531-6613 FAX: (62) 31-532-4341
MAYEKAWA (M) SDN. BHD.	No.3, JALAN PJU 3/50, SUNWAY DAMANSARA TECHNOLOGY PARK, 47810 PETALING JAYA, SELANGOR, MALAYSIA	TEL: (60) 3-78051406 FAX: (60) 3-78051409
MAYEKAWA PHILIPPINES CORP.	4/F UNIT A AND B SUNTREE TOWER, 13 MERALCO AVENUE, SAN ANTONIO, ORTIGAS CENTER, PASIG CITY 1605, PHILIPPINES	TEL: (63) 2-706-0473 FAX: (63) 2-706-0475
MAYEKAWA PHILIPPINES CORP. (GENARAL SANTOS OFFICE)	ROOM 4, LEAH DAPROZA BUILDING FISCAL DAPROZA AVENUE GENERAL SANTOS CITY 9500, PHILIPPINES	TEL: (63) 83-552-3282 FAX: (63) 83-301-2698
MAYEKAWA SINGAPORE PTE.LTD.	6 TAGORE LANE SINGAPORE 787470	TEL: (65) 6451-1565 FAX: (65) 6451-4932
MAYEKAWA (TAIWAN) CO., LTD.	No.2-1,XINZHAN RD.,QIANZHEN DIST., KAOHSIUNG CITY,80672 TAIWAN , REP.OF CHINA	TEL: (886) 7-821-0886 FAX: (886) 7-821-4688
MAYEKAWA (TAIWAN) CO., LTD. (CHEMICAL DEPARTMENT)	1F., NO.2, SHIN JANN ROAD, CHIEN CHEN DIST., KAOHSIUNG, TAIWAN 80672, REP.OF CHINA	TEL: (886) 7-812-7709 FAX: (886) 7-812-9019
MAYEKAWA (TAIWAN) CO., LTD. (TAIPEI BRANCH)	8F, NO, 421, SUNG-SHAN ROAD, TAIPEI, TAIWAN 11083, REP. OF CHINA	TEL: (886) 2-2727-9711 FAX: (886) 2-2759-8484
MAYEKAWA (TAIWAN) CO., LTD. (TAICHUNG BRANCH)	NO. 19, SEC.3, HUANJUNG RD., TAICHUNG, TAIWAN, REP. OF CHINA	TEL: (886) 4-2251-4128 FAX: (886) 4-2251-4129

Description	Location	Telephone and facsimile No.
MAYEKAWA CHINA INDUSTRIES CO., LTD. (SHANGHAI BRANCH)	ROOM 3001, NANZHENG BUILDING, NO.580 WEST NANJING RD., 200041 SHANGHAI, P.R. CHINA	TEL: (86) 21-5234-1988 FAX: (86) 21-5234-1788
MAYEKAWA CHINA MFG.CO., LTD.	201700 PLANT 1, NO.39, WEST XIQING ROAD, QINGPU, SHANHAI, P.R. CHINA	TEL: (86) 21-6920-7718 FAX: (86) 21-6920-7719
MAYEKAWA CHINA MFG.CO., LTD. (GUANGZHOU BRANCH)	266701 RM.1205, BUILDING H, R&F TIANHE PROSPEROUS PLACE, EAST LINHE ROAD, TIANHE DISTRICT, GUANGZHOU, P.R., CHINA	TEL: (86) 20-8527-6161 FAX: (86) 20-8527-6165
MAYEKAWA CHINA MFG. CO., LTD. (QINGDAO BRANCH)	ROOM 601, FULIN BUILDING NO.87 SOUTH FUZHOU ROAD, SOUTH DISTRICT, QINGDAO CITY, 266071, CHINA	TEL: (86) 532-8602-6169 FAX: (86) 532-8602-6269
MAYEKAWA MFG. CO., LTD (BEIJING LIAISON OFFICE)	NO.643 HANWEI PLAZA, NO.7 GUANGHUA ROAD, CHAOYANG DISTRICT, BEIJING 100004, P.R. CHINA	TEL: (86) 10-6561-7811 FAX: (86) 10-6561-1997
MAYEKAWA CHINA MFG. CO., LTD. (DALIAN BRANCH)	RM.A13-5, No.1 BUILDING, AREA A , WUCAI CITY, DALIAN ECO-TECH DEVELOPMENT ZONE, DALIAN 116100, CHINA	TEL: (86) 411-8753-9620 FAX: (86)411-8757-9620
MAYEKAWA (THAILAND) CO., LTD.	2/3 MOO 14, 3RD FLOOR BANGNA TOWER BLDG., TOWER A, BANGNA-TRAD RD, K.M.6.5, BANGKAEW BANGPLEE, SAMUTPRAKARN 10540, THAILAND	TEL: (66) 2-751-9610 FAX: (66) 2-751-9565
MAYEKAWA (THAILAND) CO., LTD. (TRANG BRANCH)	1/7 TRANG-PALIAN RD., MUANG, TRANG 92000, THALAND	TEL: (66) 75-224-784 FAX: (66) 75-224-351
MAYEKAWA VIETNAM ONE MEMBER CO., LTD.	ROOM 305, 3FL, TUOI TRE TOWER, 60A HOANG VAN THU, WARD 9, PHU NHUAN DIST., HO CHI MINH CITY, VIETNAM	TEL: (84) 8-3997-5284 FAX: (84) 8-3997-5287
MYCOM KOREA CO., LTD. (HEAD OFFICE)	2F, 345, CHEONGRA-RO , YONGSAN-KU, SEOUL, 140-710, REP.OF KOREA	TEL: (82) 2-796-1766 FAX: (82) 2-798-7715
MYCOM KOREA CO., LTD. CHANGWON FACTORY	19, BANGYE-RO, UICHANG-KU, CHANGWON-SI, GYEONGSANGNAM-DO 641-847, REP.OF KOREA	TEL: (82) 55-294-8678 FAX: (82) 55-299-7678
MYCOM KOREA CO., LTD. (BUSAN BRANCH)	5F, 26, JUNGANG-DAERO, JUNG-GU, BUSAN 600-714, REP.OF KOREA	TEL: (82) 51-242-3737 FAX: (82) 51-243-8542

Description	Location	Telephone and facsimile No.
MYCOM KOREA CO., LTD. (YEOSU BRANCH)	2F, YFC F/D, 57, SICHEONG-RO, YEOSU-SI, JEOLLANAM-DO, 555-807, REP. OF KOREA	TEL: (82) 61-685-5559 FAX: (82) 61-685-7773
MAYEKAWA INTERTECH KOREA CO., LTD	2F, 345, CHEONGPA-RO, YONGSAN-GU, SEOUL, 140-710, REP. OF KOREA	TEL: (82) 2-796-1766 FAX: (82) 2-798-7715
LATIN AMERICA		
MAYEKAWA ARGENTINA S.A. (BUENOS AIRES OFFICE)	AV. VELEZ SARSFIELD 670/74 C1282 AFT-CAPITAL FEDERAL BUENOS AIRES, REPUBLICA ARGENTINA	TEL: (54) 11-4302-2791 FAX: (54) 11-4304-3015
MAYEKAWA ARGENTINA S.A. (PUERTO MADRYN OFFICE)	OFICINA PTO. MADRYN LEOPOLDO LUGONES 45 (U9129KDA)-PUERTO MADRYN PCIA DE CHUBUT REPUBLICA ARGENTINA	TEL: (54) 2965-475414 FAX: (54) 2965-475414
MYCOM PERU S.A.C.	CALLE LUIS PASTEUR 1490, LINCE, LIMA, PERU	TEL: (51) 1-205-5400 FAX: (51) 1-222-1543
MAYEKAWA CHILE S.A.C.el. (SANTIAGO OFFICE)	CORDILLERA No.331, MODULO D14, FLEX CENTER, PUERTO VESPUCIO, QUILICURA, SANTIAGO, CHILE	TEL: (56) 2-739-0202 FAX: (56) 2-739-2700
MAYEKAWA CHILE S.A.C.el. (CONCEPCION OFFICE)	ANIBAL PINTO No.215, OFICINA 403, CONCEPCION, CHILE	TEL: (56) 41-223547 FAX: (56) 41-212443
MAYEKAWA CHILE S.A.C.el. (PUERTO MONTT OFFICE)	BERNARDINO 1057 MODULO 6, PARQUE INDUSTRIAL SAN ANDRES PUERTO MONTT, CHILE	TEL: (56) 65-257570 FAX: (56) 65-288073
MAYEKAWA ECUADOR S.A.	CALLE 15B Y AV. GUILLERMO PAREJA C.C.STEFANY LOCAL #4, CALLA.LA GARZOTA 1 MZ.28 SOLOR 13, GUAYAQUIL, ECUADOR	TEL: (593)4-262-9108 FAX: -
MAYEKAWA COLOMBIA S.A.S	TRANSVERSAL 93 NO.53-48 INTERIOR 37, PAQUE INDUSTRIAL EL DORADO, BOGOTA, COLOMBIA	TEL: (57) 1-430-9980 FAX: (57) 1-437-0988
MAYEKAWA COLOMBIA S.A.S. (MEDELLIN OFFICE)	DIRECCION CR 43B No. 8 SUR 10 OFICINA 404 EDF. OVIEDO MEDELLIN, COLOMBIA	TEL: (57) 4-313-4343 FAX: (57) 4-313-4343
MAYEKAWA DO BRASIL EQIPAMENTOS INDUSTRIAIS LTDA.	RUA LICATEM 250, BLOCO B/C, JARDIM PEROVA-ARUJA-SP CEP:07428-280, BRASIL	TEL: (55) 11-4654-8000 FAX: (55) 11-4654-8002
MAYEKAWA DO BRASIL LTDA. (BAHIA BRANCH)	RUA DR. JOSE PEROBA, 275 - SALA 902 EDIFICIO METROPOLIS - BAIRRO STIEPE, SALVADOR – BA,CEP:41770-235, BRASIL	TEL: (55) 71-3341-0737 FAX: —

Description	Location	Telephone and facsimile No.
MAYEKAWA DO BRASIL EQIPAMENTOS INDUSTRIAIS LTDA. (CHAPECO BRANCH)	AV. NEREU RAMOS, 75D, SALA 503A, EDIFICIO CENTRO PROFISSIONAL CEP:89801-023 C.P.:177 CHAPECO-SC, BRASIL	TEL: (55) 49-3324-0681 FAX: (55) 49-3322-4241
MAYEKAWA DO BRASIL EQIPAMENTOS INDUSTRIAIS LTDA. (CUIABA BRANCH)	AVENIDA ISSAC POVOAS, 586 – SALA 405 EDIFICIO WALL STREET - CENTRO CUIABA-MT, CEP 78055-560, BRASIL	TEL: (55) 65-3023-7559 FAX: —
MAYEKAWA DO BRASIL EQIPAMENTOS INDUSTRIAIS LTDA. (CURITIBA BRANCH)	RUA XV DE NOVEMBRO, 2175 6 ANDAR SALA 30 SHOPPING CELLI CEP:83005-000 SAO JOSE DOS PINHAIS-PR, BRASIL	TEL: (55) 41-3383-1518 FAX: (55) 41-3383-1987
MAYEKAWA DO BRASIL EQIPAMENTOS INDUSTRIAIS LTDA. (GOIANIA BRANCH)	RUA C, 255 – QUADRA 588 – LOTE 4/8 SALA 104 – CENTRO EMPRESARIAL SEBBA GOIANIA-GO, CEP 74280-010, BRASIL	TEL: (55) 62-3093-5062 FAX: —
MAYEKAWA DO BRASIL EQIPAMENTOS INDUSTRIAIS LTDA. (OESTE PAULISTA BRANCH)	AV. FRANCISCO DE CHAGAS OLIVEIRA, 344 JARDIM PINHEIRO SAO JOSE DO RIO PRETO-SP, CEP 15091-330, BRASIL	TEL: (55) 17-3227-0235 FAX: (55) 17-3227-3120
MAYEKAWA DO BRASIL EQIPAMENTOS INDUSTRIAIS LTDA. (RECIFE BRANCH)	RUA AGENOR LOPES, 292 SALA 305 CEP:51021-110 BOA VIAGEM RECIFE-PE, BRASIL	TEL: (55) 81-3342-7670 FAX: -
MAYEKAWA DO BRASIL EQIPAMENTOS INDUSTRIAIS LTDA. (RIO GRANDE DO SUL BRANCH)	RUA MUCK, 298 – SALA 601 EDIFICIO SANTA HELENA CEP:92010-250 CANOAS-RS, BRASIL	TEL: (55) 51-3429-1860 FAX: —
MAYEKAWA DO BRASIL EQIPAMENTOS INDUSTRIAIS LTDA. (LINHARES BRANCH)	AV. GOVERNADOR CARLOS LINDENBERG, 873/107 CENTRO CEP:29900-020 LINHARES-ES, BRASIL	
MAYEKAWA DO BRASIL EQIPAMENTOS INDUSTRIAIS LTDA. (MACAE)	RUA PROFESSOR MARIETA PEIXOTO, 62 CENTRO - MACAE – RJ, CEP 27910-250, BRASIL	TEL: (55) 22-2772-6069 FAX: (55) 22-2759-3112
MAYEKAWA DO BRASIL EQIPAMENTOS INDUSTRIAIS LTDA. (RIO DE JANEIRO BRANCH)	AV.LUIZ CARLOS PRESTES, 350-SALA 313-EDIFICIO BARRA TRADE II, BARRA DA TIJUCA, RIO DE JANEIRO-RJ CEP:22775-055, BRASIL	TEL: (55) 21-2431-3600 FAX: (55) 21-2430-8882
MYCOM CENTROAMERICA S.A	BODEGA #63, CONDOMINIO COMERCIAL TIERRA DOS, EL CACIQUE DE RIO SEGUNDO, ALAJUELA, COSTA RICA	TEL: (506) 2441-4464 FAX: (506) 2441-4465
MYCOM VENEZUELA SALES & SERVICES,C.A. (CARACAS OFFICE)	CALLE LOS MANGOS, EDIFICIO SELEMAR, PISO 8, SABANA GRANDE, CARACAS, VENEZUELA	TEL: (58) 212-216-6026 FAX: (58) 212-216-0608

Description	Location	Telephone and facsimile No.
MYCOM VENEZUELA SALES & SERVICE, C.A. (MARACAY OFFICE)	AV.INTERCOMUNAL TURMERO, EDF.TECHOMAT METROPOLITANO, PISO 1, OFICINA 3, MARACAY, EDO.ARAGUA, VENEZUELA	TEL: (58) 243-269-4913 FAX: (58) 243-269-3952
MYCOM VENEZUELA SALES & SERVICE, C.A. (MARACAIBO OFFICE)	CALLE 148,CENTRO EMPRESARIAL SAN FRANCISCO NIVEL 1 LOCAL 5 Y 6, ZONA INDUSTRIAL IIETAPA,SAN FRANCISCO EDO.ZUILIA, VENEZUELA	TEL: (58) 261-418-1760 FAX: -
MYCOM VENEZUELA SALES & SERVICE, C.A. (BARCELONA OFFICE)	AV. MUNICIPAL DE PTO. LA CRUZ, EDIF. LOCAL NRO.57, PLANTA ALTA, MUNICIPIO SOTILLO, PUERTO LA CRUZ, VENEZUELA	TEL: (58) 261-765-1059
MYCOM CHEMICAL PROCESS CORP. DE VENEZUELA S.A.	CALLE 148,CENTRO EMPRESARIAL SAN FRANCISCO NIVEL 1 LOCAL 5 Y 6, ZONA INDUSTRIAL IIETAPA,SAN FRANCISCO EDO.ZUILIA, VENEZUELA	TEL: (58) 261-418-1760 FAX: -
MAYEKAWA DE MEXICO, S.A. DE C.V. (CUERNAVACA OFFICE)	AV.DE LOS 50MTS.NO.381, CIVAC. JIUTEPEC MORELOS, C.P.62578, MEXICO	TEL: (52) 77-73-19-0925 FAX: (52) 77-73-20-5762
MAYEKAWA DE MEXICO, S.A. DE C.V. (MEXICO CITY OFFICE)	AV.COYOACAN #945 COL .DEL VALLE DEL. BENITO JUAREZ C.P.03100, MEXICO, D.F. MEXICO	TEL: (52) 55-5062-0870 FAX: (52) 55-5062-0898
MAYEKAWA DE MEXICO, S.A. DE C.V. (GUADALAJARA OFFICE)	SANTA MARIA No.3086, COL. VALLARTA SAN LUCAS GUADALAJARA, JALISCO, C.P.44690, MEXICO	TEL: (52) 3336-15-5765 FAX: (52) 3336-15-1307
MAYEKAWA DE MEXICO, S.A. DE C.V. (MONTERREY OFFICE)	AV.CHAPULTEPEC NO.2233 OTE. FRACC, BUENOS AIRES MONTERREY N.L. C.P.64800, MEXICO	TEL: (52) 81-8347-3085 FAX: (52) 81-8347-5830
MAYEKAWA DE MEXICO, S.A. DE C.V. (HERMOSILLO OFFICE)	CALLE FRAY TORIBIO DE BENAVENTE #38 COL. LOS ARCOS CD. HERMOSILLO, SONORA, C.P.83250, MEXICO	TEL: (52) 662-216-2047 FAX: (52) 662-216-2047
MAYEKAWA DE MEXICO, S.A. DE C.V. (IRAPUATO OFFICE)	CALLE AGUSTIN ZARAGOZA NO.219 LOCAL-2 COL.DEPORTIVA, C.P.36612, IRAPUATO, GTO. MEXICO	TEL: (52) 462-624-9353 FAX: (52) 462-624-9264
MAYEKAWA DE MEXICO, S.A. DE C.V. (CULIACAN OFFICE)	AV. NICOLAS BRAVO 1572, LOCAL 1 COL.MORELOS CULIACAN, SINALOA, C.P.80170, MEXICO	TEL: (52) 66-7715-4199 FAX: (52) 66-7715-4150

MAYEKAWA MFG. CO., LTD.

3-14-15 Botan, Koto-ku, Tokyo 135-8482
TEL : 03-3642-8181
URL : http://www.mayekawa.com/