RBT011-01_2008.10.
First edition: 2008/10/01

MAYEKAWA

Reciprocating Compressor
WBHE Series Operation Manual

4WBHE/6WBHE/8WBHE/8WBHEH
6WBHEU/8WBHEU/8WBHEHU
42WBHE/62WBHE

CAUTION

Before installing, operating, inspecting, or servicing the compressor, read this manual thoroughly to fully understand the contents.

Keep this operation manual in a safe, designated place for future reference whenever the manual is needed.

Descriptions in this manual and specification of this compressor are subject to change without notice.

MYCOM MAYEKAWA MFG. CO., LTD.

3–14–15 Botan Koto-ku, Tokyo 135-8482, Japan

Preface

Thank you for having purchased our WBHE series reciprocating compressor (hereinafter indicated as "this compressor").

This operation manual (hereinafter indicated as "this manual") describes safety information, and operational and maintenance procedures in detail for safe and effective use of this compressor.

Before installing or using this compressor, make sure to read this manual.

Keep this manual in a safe place near the compressor for quick reference.

WBHE series is a modified compressor of WBH series. The compressor configuration of the applicable WBH series is described below.

4WBH/6WBH/8WBH/8WBHH

6WBHU/8WBHU/8WBHHU

42WBH/62WBH

Warranty and Disclaimer

Warranty Clauses

If malfunctions occur related to design or manufacture of the product under a normal limitation of use condition following documents such as operation manual of this product, and if it is within the warranty period, we will repair or replace the product.

The warranty period is "12 months from factory shipment of this product". If there is an article of agreement, the description written on the agreement takes precedence in principle.

Disclaimer Clauses (Exclusion of Warranty Clauses)

Please note that we assume no product liability for the following disclaimer clauses for this product.

- Malfunction or damage which has been caused by accidental forces such as natural disasters (windstorm, intense rainfall, flood, tidal wave, earthquake, land sinkage, thunderbolt, fire disaster, etc.)
- Malfunction, damage, or defect of this product which has been subjected to abnormal use, improper use (such as keeping this product outside the building or in locations subject to high temperatures and high humidity, excessive liquid back operation, and repeating start-up/stoppage of the product excessively.)
- Malfunction or damage which has been caused by devices or equipment that is not delivered by us or by operation control method of those devices.
- Malfunction or damage which has been caused by using refrigerant (or gases), lubricant, and use condition (design condition) that are not approved for this product.
- Malfunction or damage which has been caused by performing maintenance and inspection that is not recommended by us.
- Malfunction or damage which has been caused by redesigning this product that has not instructed by Mayekawa/Mycom.
- Malfunction or damage which has been caused by remodeling this product that are not instructed by us.
- Production warranty or any other related warranty of this product.
- Warranty of all human disasters related to the disclaimer clauses above.

Important Information

Intended Use of Compressor

The WBHE series compressor is a reciprocating compressor for refrigerating, cold storage, and air conditioning systems by using refrigerant. Do not use the compressor for any other purposes that are not intended or departing from the specifications. For the specification of this compressor, refer to "2.2 Specification of Compressor".

When performing maintenance described we ask that you use qualified refrigeration personal.

Important Information for Safe Use of Compressor

MAYEKAWA cannot anticipate all possible hazards including any potential hazards caused by human errors, and hazards due to the environmental conditions where the compressor is used.

There are plenty of guidelines that must be observed for operating the compressor the warnings in this manual and safety labels on the compressor are, not all inclusive. When operating this compressor, use extreme caution on required personal safety as well as on the items described in this manual.

Listed below are the important rules for safety work with the compressor that apply to all workers including managers and supervisors.

Before using this compressor, carefully read and fully understand the contents written in this manual and reliably follow the safety procedures.

- Operation, maintenance, and inspection of this compressor should only be performed by qualified personal educated about the fundamentals of the compressor and trained about the hazards involved and the measures to avoid danger.
- Do not allow any person other than those who are educated about fundamental expertise of the compressor and trained about the hazards involved and the measures to avoid dangers to approach the compressor while it is operating or while performing maintenance.
- Observe all related federal/national and local codes and regulations and instructions of our sales offices, service centers or agencies.
- This compressor may be modified without any prior notice. Therefore, the appearance of actual compressor may slightly differ from the descriptions in this manual. If you have any questions contact your sales offices or service centers.
- To prevent an accident, do not attempt to carry out any operation or maintenance other than those described in this manual, or use the compressor for any unapproved purpose.
- Replace the parts with the MAYEKAWA genuine parts.
- Every worker including managers and supervisors should actively participate in activities to insure health and safety in the workplace.

Observe the following precautions when performing maintenance work on electrical control.

- Electrical maintenance of the compressor must be performed by certified/qualified personal and only those educated about the electrical control of the compressor.
- Before servicing or inspecting the electrical equipment or devices, turn "OFF" the motor main power and control power, and perform lockout/tag out to prevent them from being turned on during the work.

Even when the motor main power and control power are turned "OFF", the compressor may be alive if the power is supplied from outside of the refrigeration system, cold storage, and air conditioning systems. In such cases, be sure to shut off the power supply on the power source side, and perform lockout/tag out to prevent the compressor from being turned on during the work.

About This Manual

- This manual is English. If any other language is required it is the customer's responsibility to prepare a manual for safety education and operation instructions.
- This manual is copyrighted. The drawings and technical references including this manual shall not, in whole or part, be copied, photocopied, or reproduced to any electronic medium or machine-readable form without any prior permission from MAYEKAWA.
- The photos or drawings included in this manual may slightly differ from the appearance of actual compressor.
- If this manual is lost or damaged, immediately place a purchase order to your local sales offices or service centers for a new manual. Using the compressor without the manual may result in safety issues.
- If you resell the compressor, never fail to attach this manual to the compressor.
- If there is an article of agreement regarding descriptions in this manual and specification of this compressor, the description written on that agreement takes precedence in principle.
- Descriptions in this manual and specification of this compressor is subject to change without notice.

Construction of This Manual

Title of Section and Chapter	Description Details
Preface	Describes the outline of this manual and how to read this manual.
Warranty and Disclaimer	Describes clauses and coverage of warranty. Exclusion of warranty clauses is described as disclaimer.
Important Information	Describes important information related to the compressor and this manual.
1. Safety	Describes safety information for the worker, safety rules for this compressor, and management details regarding the work safety that is required for handling the compressor.
2. Specification and Configuration of Compressor	Describes the main components of the compressor, functional information, specification, and operation limits.
3. Installation	Describes the installation procedure of the compressor.
4. Operation of the Compressor	Describes the precautions for operating the compressor.
5. Maintenance	Describes sections and period for inspecting, and disassembly and assembly of this product.
6. Troubleshooting	Describes the methods of the compressor in case of problem occurring during operation of the compressor.
7. Related Document	Describes supplemental documents such as illustrated parts breakdown and parts list.

How to Order MAYEKAWA Genuine Parts

Confirm the applicable parts in "7.1 Development View and Configuration Table of the Parts" of "Chapter 7, Related Document". Then, inform the product name, part number, part name, and required quantity to our sales offices or service centers.

Inquiry

If you need further information or have any questions, please contact your local sales offices or service centers.

Description	Location	Telephone and facsimile No.
MAYEKAWA MFG. CO., LTD (HEAD OFFICE)	3–14–15 BOTAN KOTO-KU, TOKYO 135-8482, JAPAN	TEL: (81) 3-3642-8181 FAX: (81) 3–3643-7094
MAYEKAWA MFG. CO., LTD (MORIYA PLANT)	2000, TAYSUZAWA MORIYA–SHI, IBARAKI–PREF., 302–0118, JAPAN	TEL: (81) 297–48–1361 FAX: (81) 297–48–5269
NORTH AMERICA		
MYCOM CANADA LTD. (VANCOUVER OFFICE)	UNIT 110, 6620 McMillan WAY, RICHMOND, B.C., V6W 1J7, CANADA	TEL: (1) 604-270-1544 FAX: (1) 604-270-9870
MYCOM CANADA LTD. (TORONTO OFFICE)	1745 BONHILL ROAD, UNIT 6 MISSISSAUGA, ON L5T 1C1	TEL: (1) 905-564-0664 FAX: (1) 905-564-7614
MAYEKAWA U.S.A. INC. (HEAD OFFICE)	8750 WEST BRYN MAWR AVENUE, SUITE 190 CHICAGO, IL 60631, U.S.A.	TEL: (1) 773-516-5070 FAX: (1) 773-516-5071
MAYEKAWA U.S.A. INC. INDUSTRIAL REFRIGERATION DIVISION (LA OFFICE, PLANT)	19475 GRAMERCY PLACE, TORRANCE, CA 90501, U.S.A.	TEL: (1) 310-328-1362 FAX: (1) 310-782-6759
MAYEKAWA U.S.A. INC. INDUSTRIAL REFRIGERATION DIVISION (SEATTLE OFFICE)	19730 64TH AVENUE WEST #302, LYNNWOOD, WA 98036, U.S.A.	TEL: (1) 425-977-4285 FAX: (1) 425-944-4359
MAYEKAWA U.S.A. INC. INDUSTRIAL REFRIGERATION DIVISION (MODESTO OFFICE)	4718 Green Leaf Court, Suite 5 Modesto, CA 95356, U.S.A.	TEL: (1) 209-545-9752 FAX: (1) 209-545-3654
MAYEKAWA U.S.A. INC. INDUSTRIAL REFRIGERATION DIVISION (NY OFFICE)	#210 SUMMIT AVENUE, SUITE C-12 MONTVALE, NEW JERSEY, 07645, U.S.A	TEL: (1) 201-307-9189 FAX: (1) 201-307-1566
MAYEKAWA U.S.A. INC. INDUSTRIAL REFRIGERATION DIVISION (MIAMI OFFICE)	1845 NW 112TH AVE., SUITE #206, MIAMI, FL 33172, U.S.A.	TEL: (1) 305-477-5741 FAX: (1) 305-477-5681
MAYEKAWA U.S.A. INC. INDUSTRIAL REFRIGERATION DIVISION (CHARLOTTE OFFICE)	15905 BROOKWAY DRIVE UNIT 4208 HUNTERSVILLE, NC 28078, U.S.A.	TEL: (1) 704-896-3632 FAX: (1) 704-896-3697
MAYEKAWA U.S.A. INC. INDUSTRIAL REFRIGERATION DIVISION (HUSTON OFFICE)	3222 PASADENA FREEWAY PASADENA, TX 77503, U.S.A	TEL: (1) 281-447-2599 FAX: (1) 281-447-6623
MAYEKAWA U.S.A.INC. MANUFACTURING DIVISION	16825 IH 35 NORTH SELMA, TX 78154, U.S.A.	TEL: (1) 210-599-4518 FAX: (1) 210-599-1788
MAYEKAWA U.S.A. INC. CHEMICAL PROCESS DIVISION	19475 GRAMERCY PLACE, TORRANCE, CA 90501, U.S.A	TEL: (1) 310-328-6279 FAX: (1) 310-328-8487

Description	Location	Telephone and facsimile No.
EUROPE		
N.V.MAYEKAWA EUROPE S.A.	LEUVENSESTEENWEG 605 1930 ZAVENTEM, BELGIUM	TEL: (32) 2-757-9075 FAX: (32) 2-757-9023
N.V. MAYEKAWA EUROPE S.A. ZWEIGNIEDERLASSUNG DEUTSCHLAND	NUERNBERGER STRASSE 118, 97076 WUERZBURG, DEUTSCHLAND	TEL: (49) 931-359388-0 FAX: (49) 931-359388-20
MAYEKAWA. S.L.	CALLE MONTEVIDEO 5,NAVE 13 POL.INDUSTRIAL CAMPORROSO 28806 ALCALA DE HENARES, MADRID, SPAIN	TEL: (34) 91-830-0392 FAX: (34) 91-830-0397
MAYEKAWA EUROPE S.A. SUCCURSALE FRANCAISE	9,RUE MICHAEL FARADAY, 78180 MONTIGNY-LE-BRETONNEUX, FRANCE	TEL: (33) 1-30-58-26-00 FAX: (33) 1-30-58-19-37
MAYEKAWA MFG. CO., LTD. MOSCOW LIAISON OFFICE	119049, MOSCOW, MYTNAYA ST. HOUSE 3, FLAT 54, RUSSIA	TEL: (7) 495-230-01-76 FAX: (7) 495-230-21-12
N.V. MAYEKAWA EUROPE S.A. SWITZERLAND ZUG REPRESENTATIVE OFFICE	ZUGERBERGSTRASSE 37, 6300 ZUG, SWITZERLAND	TEL: (41) 41-712-1855 FAX: (41) 41-712-1853
ASIA		
MAYEKAWA AUSTRALIA PTY. LTD.	UNIT 2, 44 McCauley Street MATRAVILLE NSW 2036, AUSTRALIA	TEL: (61) 2-9695-7000 FAX: (61) 2-9695-7001
P.T.MYCOM INDONESIA	GRAHA PRATAMA Building, 9TH Floor JI.M.T.HARYONO Kav.15 Jakarta 12810-INDONESIA	TEL: (62) 21-8370-9484 FAX: (62) 21-8370-9483
MAYEKAWA SINGAPORE PTE.LTD.	6 TAGORE LANE SINGAPORE 787470	TEL: (65) 6451-1565 FAX: (65) 6451-4932
MYCOM INDUSTRY CO., LTD.	NO.2, SHIN JANN ROAD, CHIEN CHEN DIST., KAOHSIUNG, TAIWAN, 806, REP.OF CHINA	TEL: (886) 7-821-0886 FAX: (886) 7-821-4688
MYCOM INDUSTRY CO., LTD. CHEMICAL DEPARTMENT	NO.2, SHIN JANN ROAD, CHIEN CHEN DIST., KAOHSIUNG, TAIWAN, 806, REP.OF CHINA	TEL: (886) 7-821-7709 FAX: (886) 7-821-9019
MAYEKAWA CHINA INDUSTRIES CO., LTD.	ROOM 705, WISE LOGIC INTERNATIONAL NO.66 NORTH SHANXI RD., 200041 SHANGHAI, CHINA	TEL: (86) 21-5116-8958 FAX:(86) 21-5116-8928
MAYEKAWA CHINA INDUSTRIES CO., LTD. QINGDAO OFFICE	ROOM 503, FULIN BUILDING NO.87 SOUTH FUZHOU ROAD, SOUTH DISTRICT QINGDAO CITY, CHINA 266071	TEL: (86) 532-8602-6169 FAX: (86) 532-8602-6269
MAYEKAWA MFG.CO., LTD SHANGHAI LIAISON OFFICE	ROOM 604 DONGHAI PLAZA #3 BUILDING NO.1486 NANJING RD(W). 200040 SHANGHAI, CHINA	TEL: (86) 21-6247-2388 FAX: (86) 21-6247-4064
MAYEKAWA (THAILAND) CO., LTD.	2/3 MOO 14,9TH FLOOR BANGNA TOWER BLDG., TOWER A, BANGNA-TRAD RD, K.M.6.5, BANGKAEW BANGPLEE, SAMUTPRAKARN 10540 THAILAND	TEL: (66) 2-751-9610 FAX: (66) 2-751-9565

Description	Location	Telephone and facsimile No.
MAYEKAWA HOLDING (THAILAND) CO., LTD.	2/3 MOO 14,9TH FLOOR BANGNA TOWER BLDG., TOWER A, BANGNA-TRAD RD, K.M.6.5, BANGKAEW BANGPLEE, SAMUTPRAKARN 10540 THAILAND	TEL: (66) 2-751-9610 FAX: (66) 2-751-9565
MAYEKAWA MFG.CO., LTD. HO CHI MINH CITY REPRESENTATIVE OFFICE	4FL,OSIC BUILDING No.8, NGUYEN HUE BLVD.DISTRICT 1, HO CHI MINH CITY-VIETNAM	TEL: (84) 8-8256917 FAX: (84) 8-8256919
MYCOM KOREA CO., LTD. HEAD OFFICE	BUILDING 10F, 40-17 3GA HANGANGRO, YONGSAN-KU SEOUL, 140-880 REP.OF, KOREA	TEL: (82) 2-796-1766 FAX: (82) 2-798-7715
MYCOM KOREA CO.,LTD. CHANGWON FACTORY	PALYONG DONG 24-20, CHANGWON KYUNGSANGNAM-DO 641847 REP.OF KOREA	TEL: (82)55-294-8678 FAX: (82)55-299-7678
MYCOM KOREA CO., LTD. PUSAN BRANCH	TONG YOUNG SU SAN 6F, 763-20 KAMCHEON-DONG, SAHA-KU, PUSAN 604-071 REP.OF KOREA	TEL: (82) 51-242-3737 FAX: (82) 51-243-8542
MYCOM REFRIGERATION INDIA PVT.LTD.	1ST FLOOR, BALAJI HOUSE, NR. MAHALAXMI HEIGHTS, MUMBAI-PUNE ROAD, PIMPRI, PUNE -411 018 MAHARASHTRA, INDIA	TEL: (91) 20-2746-4537 FAX: (91) 20-2746-4539
LATIN AMERICA		
MYCOM PERU S.A.C.	CALLE LUIS PASTEUR 1490, LINCE, LIMA, PERU	TEL: (51) 1-441-8552 FAX: (51) 1-222-1543
MAYEKAWA CHILE S.A.C.el. (SANTIAGO OFFICE)	CORDILLERA No.331, MODULO D14,FLEX CENTER, PUERTO VESPUCIO, QUILICURA, SANTIAGO, CHILE	TEL: (56) 2-739-0202 FAX: (56) 2-739-2700
MAYEKAWA DO BRASIL LTDA. (SAO PAULO)	RUA LICATEM 250, JARDIM FAZENDA RINCAO POLO INDUSTRIAL DE ARUJA-SP, BRASIL CEP:07400-000	TEL: (55) 11-4654-8000 FAX: (55) 11-4654-8002
MAYEKAWA DO BRASIL LTDA. (RIO DE JANEIRO BRANCH)	AV.LUIS CARLOS PRESTES NO.350, SALA 310 EDIFICIO BARRA TRADE 2, CEP: 22775-050 RIO DE JANEIRO, BRASIL	TEL: (55) 21-2430-8882 FAX: (55) 21-2430-8882
MAYEKAWA DO BRASIL LTDA. (MACAE)	AV.PAPA JOAO XXⅢ No.54, VILA CAOLINA CASA 22-IMBETIBA CEP: 27913-200 MACAE-RJ, BRASIL	TEL: (55) 22-2772-6069 FAX: (55) 22-2759-3112
MYCOM CENTROAMERICA S.A	350 METROS OESTE DEL SERVICENTRO SHEYZA, SAN ANTONIO DE BELEN, HEREDIA- COSTA RICA	TEL: (506) 2293-7656 FAX: (506) 2293-5991

Description	Location	Telephone and facsimile No.
MYCOM VENEZUELA SALES & SERVICES,C.A. (CARACAS OFFICE)	CALLE LOS MANGOS, EDIFICIO SELEMAR PISO 8, SABANA GRANDE CARACAS, VENEZUELA	TEL: (58) 212-216-6026 FAX: (58) 212-216-0608
MYCOM VENEZUELA SALES & SERVICE, C.A. (MARACAY OFFICE)	AV.INTERCOMUNAL TURMERO, EDF.TECHOMAT METROPOLITANO, PISO 1,OFICINA 3,MARACAY, EDO.ARAGUA, VENEZUELA	TEL: (58) 243-269-4913 FAX: (58) 243-269-3952
MAYEKAWA DE MEXICO, S.A.DE C.V. (CUERNAVACA OFFICE)	AV.DE LOS 50 MTS.NO.381, CIVAC. JIUTEPEC MORELOS, C.P.62578, MEXICO	TEL: (52) 77-73-19-0925 FAX: (52) 77-73-19-0947
MAYEKAWA DE MEXICO, S.A.DE C.V. (MEXICO CITY OFFICE)	AV.COYOACAN #945 COL.DEL VALLE DEL.BENITO JUAREZ C.P.03100, MEXICO, D.F. MEXICO	TEL: (52) 55-5062-0870 FAX: (52) 55-5062-0898

Revision Description

Operation manual name	WBHE Series Operation Manual	Document No.	RBT011-00_2008.10.	First edition issue date	2008/10/1

Revision No.	Issuance Date	Contents of revisions (modified clause, page, and details)	Created/approved by:

Table of Contents

Chapter 1 Safety

1.1 Observation/Prevention 1-1
1.1.1 Observance (Do's) 1-1
1.1.1.1 Do's on Operation 1-1
1.1.1.2 Do's on Maintenance 1-1
1.1.1.3 Do's on Lockout/Tag out after Shutting off the Power 1-1
1.1.1.4 Do's about Personal Protective Devices 1-2
1.1.1.5 Strict Do's about Handling of Hazardous and Toxic Substances 1-2
1.1.1.6 Strict Do's about Handling Emergency Situation 1-2
1.1.1.7 Strict Do's about Waste Oil, Fluid, and Materials 1-2
1.1.1.8 Other Strict Do's 1-2
1.1.2 Prohibition (Don'ts) 1-2
1.2 Warnings 1-3
1.2.1 Types and Meanings of Warnings 1-3
1.3 Remaining Hazard 1-4
1.4 Safety Devices 1-6
1.4.1 Emergency Stop Button 1-6
1.4.2 Breakers of Motor Main Power and Control Power (with Lockout/Tag out Mechanisms) 1-6
1.4.3 Safety Cover (Driving Section) 1-7
1.4.4 Safety Valve 1-8
1.4.5 Automatic Control and Protection Equipment of WBHE Compressor 1-9
1.4.6 Water Failure Alarm 1-11
1.4.7 Oil Heater and Thermometer Switch 1-12
1.5 Example of Material Safety Data Sheet (MSDS) 1-13

Chapter 2 Specification and Configuration of Compressor

2.1 Specification of Compressor 2-1
2.1.1 Identification 2-1
2.1.1.1 Compressor Configuration 2-1
2.1.1.2 Name Plate 2-1
2.1.1.3 Code Designation of WBHE Series 2-2
2.1.1.4 Refrigerant and its Cooling Method 2-2
2.1.2 Specification 2-3
2.1.2.1 Specification 2-3
2.1.2.2 Design Pressure 2-4
2.1.3 Operating Limit 2-5
2.1.4 External Dimensions 2-6
2.2 Configuration of Compressor 2-8
2.2.1 Updated Contents of Configuration 2-8
2.2.1.1 Crankcase 2-8
2.2.1.2 Shaft Seal 2-9
2.2.1.3 Thrust Load Bearing 2-10
2.2.1.4 Oil Infusing Route of Oil Pump 2-11
2.2.1.5 Piston Rings and Piston 2-12

2.2.1.6 Discharge Valve Cage and Valve Plate 2-13
2.2.1.7 Crankshaft of Single-stage Eight-cylinder Compressor 2-14
2.2.1.8 Application for 0% Load Operation (Optional Specification) 2-14
2.2.2 Development View and Parts List 2-15
2.2.3 Modified Parts 2-21
2.2.3.1 Modified Parts 2-21
2.2.3.2 Deleted Parts 2-21
2.2.4 Cross-Sectional View of Assembly 2-22
2.2.5 Oil Supply Mechanism 2-25
2.2.6 Unloader Mechanism 2-26

2.3 V-Belt and Direct Coupling 2-27

Chapter 3 Installation

3.1 Safety Precautions for Installation 3-1

3.2 Installation Works 3-2

3.2.1 Unpacking 3-2
3.2.2 Storage 3-2
3.2.3 Transfer 3-2
3.2.4 Preparation for Installation 3-4
3.2.5 Installation 3-6
3.2.5.1 Installation 3-6
3.2.5.2 Position of the Oil Returning Point in the Oil Separator / Procedure of Oil Returning 3-6
3.2.5.3 Protection Switch 3-6
3.2.5.4 Centering of the Compressor/Driving Machine and Attachment of the V-belt 3-7
3.2.5.5 Piping 3-10
3.2.5.6 Changing Rotational Direction of Compressor 3-13
3.2.5.7 Charging of Lubricating Oils 3-13
3.2.6 Check after Installation 3-13

Chapter 4 Operation of the Compressor

4.1 Lubricating Oils 4-1

4.1.1 Precautions for Selecting the Lubricating Oils 4-1
4.1.2 Initial Oil Charging Method 4-2
4.1.3 Replenishment of the Lubricating Oils 4-2
4.1.4 Set Oil Pressure 4-2
4.1.5 Oil Quantity 4-3

4.2 Initial Operation 4-4

4.2.1 Initial Operation Method 4-5

4.3 Capacity Control Order 4-6

4.4 Operation Notices 4-7

4.4.1 Start/Stop Limitation 4-7
4.4.2 Settings 4-7
4.4.3 Action for Stopping the Compressor for Long Period of Time 4-8
4.4.4 Operation after the Compressor has been Stopped for Long Period of Time 4-9

4.4.5 Lubricating the Mechanical Seal before Starting Operation 4-9
4.4.5.1 Initial Oil Supply to the Mechanical Seal Sliding Section 4-9
4.4.5.2 Initial Oil Supply to the Oil Passages in the Compressor (Rotating the Crankshaft) 4-9
4.4.6 Oil Pressure Regulating Valve 4-10
4.4.7 Starter 4-11
4.4.8 Operation after Replacing Oil Pump 4-11

Chapter 5 Maintenance

5.1 Safety Precautions for Maintenance 5-1
5.2 Periodic Inspection 5-2
5.2.1 Daily Inspection 5-2
5.2.2 Monthly Inspection 5-3
5.2.3 Biannual Inspection 5-3
5.3 Maintenance (Overhaul) 5-4
5.3.1 Maintenance Period and Operation Conditions 5-4
5.3.2 First Maintenance 5-5
5.3.3 Second Maintenance 5-5
5.3.4 Third Maintenance 5-6
5.4 Lubricating Oils Control Standard 5-7
5.5 Disassembly 5-8
5.5.1 Requirements for Disassembly 5-9
5.5.1.1 Interruption of All the Power Circuits 5-9
5.5.1.2 Disposal of Refrigerant and Oil from This System 5-9
5.5.1.3 Draining of Cooling Water 5-9
5.5.1.4 Removal of V-belt or Coupling 5-9
5.5.1.5 Ensuring of Proper Tools and Work Space 5-10
5.5.2 Flow of Work 5-11
5.5.2.1 Removal of Cooling Water Piping 5-12
5.5.2.2 Removal of the Head Cover 5-12
5.5.2.3 Removal of Safety Head Spring 5-13
5.5.2.4 Removal of Discharge Valve ASSY 5-14
5.5.2.5 Unloader Device 5-16
5.5.2.6 Oil Cooler and Hand Hole Cover 5-17
5.5.2.7 Disassembly of the Cylinder ASSY 5-18
5.5.2.8 Cylinder Sleeve 5-20
5.5.2.9 Pistons and Connecting Rod 5-20
5.5.2.10 Piston Ring 5-21
5.5.2.11 Cover Plate 5-22
5.5.2.12 Shaft Seal 5-23
5.5.2.13 Oil Pump 5-24
5.5.2.14 Drag Crank 5-24
5.5.2.15 Main Bearing Head 5-25
5.5.2.16 Main Bearing 5-25
5.5.2.17 Crankshaft 5-26
5.5.2.18 Thrust Bearing 5-27
5.5.2.19 Removal of Strainers 5-27

5.6 Assembly 5-31
5.6.1 List of Tightening Bolts 5-32
5.6.2 Work Flow 5-33
5.6.2.1 Thrust Bearing 5-34
5.6.2.2 Crankshaft 5-35
5.6.2.3 Main Bearing and Main Bearing Head 5-36
5.6.2.4 Drag Crank and Oil Pump 5-37
5.6.2.5 Shaft Seal and Cover Plate 5-38
5.6.2.6 Assembly of the Cylinder ASSY (Three Ring Specification) 5-41
5.6.2.7 Assembly of the Cylinder ASSY(WBH Series) 5-46
5.6.2.8 Mounting of the Cylinder ASSY in Crankcase 5-50
5.6.2.9 Adjustment of the Unloader Device 5-54
5.6.2.10 Valve Plate 5-55
5.6.2.11 Attachment of Strainers and Hand Hole Covers 5-57
5.6.2.12 5-57
5.6.2.13 Head Cover 5-59
5.6.2.14 Cooling Water Piping 5-62
5.6.2.15 Final Inspection 5-63

Chapter 6 Troubleshooting

6.1 Troubleshooting Table 6-1

Chapter 7 Related Document

7.1 Development View and Parts List 7-1
7.1.1 Compressor Assembly Development View 7-1
7.1.2 Development View of the Cylinder 7-2
7.1.3 Development View of the Thrust Bearing 7-3
7.1.4 Development View of the Main Bearing 7-3
7.1.5 Parts List 7-4
7.2 Specification of Discharge Elbow and Scale Trap 7-9
7.3 Specification of Oil Pump 7-10
7.4 Specification List of Suction Valve and Discharge Valve 7-11
7.4.1 Specification List of Suction Valve 7-11
7.4.2 Specification List of Discharge Valve 7-11
7.5 List of Tightening Torques for Bolts and Nuts 7-12
7.6 Part Replacement Standards 7-13
7.7 Standard Thrust Gap 7-21

1 Safety

1.1 Observation/Prevention

1.1.1 Observance (Do's)

1.1.1.1 Do's on Operation

- Attach safety and protection devices to the compressors operation sequence.
- Regularly inspect the safety and protective devices that they function properly.
- If safety and protective devices do not work properly or the compressor continues to run even during test of these devices, stop the operation! Inform your supervisor of it immediately.
- If the compressor stops for unknown reasons, immediately inform your supervisor of it and obtain his/her approval before restarting the compressor.
- Some refrigerants in use can generate bad smells or toxic gases. Make sure to ventilate the air during work.
- The properties of refrigerant and lubricating oils can be corrosive, decomposable, and toxic, ensure to obtain the Material Safety Data Sheet (MSDS) and follow its instructions.
- When stopping the operation of this compressor, turn "OFF" the motor (main power), heater power, and control power. Close the suction and discharge side shut-off valves. Follow proper compressor evacuation procedures.

1.1.1.2 Do's on Maintenance

- Before performing the work together with at least one other person, thoroughly confirm each other's work details.
- Always turn OFF and lock out/tag out the motor (main power), control power, and other devices before troubleshooting during operation, and before setup, cleaning, or maintenance and inspection of the compressor. Also, make sure that those powers are NOT turned on accidentally during the works.
- Always confirm that pressure is atmospheric on the inside of compressor,, cold storage, air conditioning systems before troubleshooting during operation, and before setup, cleaning, or maintenance and inspection of the compressor.
- Some refrigerants in use generate bad smells or toxic gases. Make sure to ventilate the air during work.
- The properties of refrigerant and lubricating oils can be corrosive, decomposable, and toxic, insure to obtain the Material Safety Data Sheet (MSDS) and follow its instructions.
- Return tools to their proper place after use.

1.1.1.3 Do's on Lockout/Tag out after Shutting off the Power

- Install lockout/tag out mechanisms on the main breakers of motor main power and control power. Performing lockout/tag out after shutting off the power is very effective for preventing the compressor being turned on accidentally and causing injury while two or more workers are working on compressor.
- If there are any possibilities of danger during the work (especially during cleaning, maintenance and inspection, and troubleshooting), turn "OFF" the motor main power and control power, and perform lockout/tag out.
- Some workers may neglect to shut off the power and perform lockout/tag out in the following situations. Clearly notify the workers of the work which require lockout/tagout and their necessity.
    - Some workers do not perform lockout/tag out before starting the work, because it is troublesome for them to turn "OFF" the motor main power and control power and perform lockout/tag out.
    - Some workers may judge lockout/tag out are not required for safety, and neglect them after turning "OFF" the motor main power and control power.

1.1.1.4 Do's about Personal Protective Devices

- Prepare and use protective devices complying with the safety standards of the regulations.
- Check the functioning of each protective device before using.
- Do not wear any neckties or jewelry as there is a possibility of being entangled by a movable part or rotating part. Put on a helmet or hat as your hair may become entangled.
- Do not have anything in your pocket to prevent objects from falling into the compressor, cold storage, air conditioning systems.

1.1.1.5 Strict Do's about Handling of Hazardous and Toxic Substances

- Obtain Material Safety Data Sheet (MSDS) from manufacturers of hazardous and toxic substances.
- Check the MSDS and follow the handling instructions recommended by the manufacturers to handle and store those substances.

【POINT】

- An example of Material Safety Data Sheet (MSDS) is provided as a reference at the end of this chapter.

1.1.1.6 Strict Do's about Handling Emergency Situation

- Formulate an emergency action plan complying with the regulations. Post it on a place so that the workers can always see the emergency action plan.

1.1.1.7 Strict Do's about Waste Oil, Fluid, and Materials

- Disposing of refrigerant and oil used for the compressor and cold storage, air conditioning systems are subject to a number of regulations for the environmental protection purposes. Follow the local, state, federal acts and regulations and your company's rules when disposing of such waste oil, fluid and materials.

1.1.1.8 Other Strict Do's

- Keep the floor clean around the compressor, cold storage, and air conditioning systems, and provide a safety aisle.
- During a work, use only the safety aisle to move around the equipment. Keep the safety aisle free from any tools and cleaning fluid.
- If water or oil is spilled on the compressor or the floor, immediately wipe it off to prevent workers from injury caused by slipping.

1.1.2 Prohibition (Don'ts)

- Do not remove or relocate any safety device, including electrical interfaces.
- Do not disable any safety device by short-circuiting or bypassing without any permission.
- Do not leave the compressor unsafe and unattended, by removing a safety cover or some other measures.
- Do not touch, clean, or lubricate any moving part of the compressor during operation
- Do not touch, clean, or lubricate the compressor during its operation.
- Do not touch relays or electric systems such as terminal block with bare hands when turning on the power.

1.2 Warnings

To alert workers to danger, the following two measures are always provided with the compressor.

- Warnings described in this manual
- Safety labels affixed on the compressor

1.2.1 Types and Meanings of Warnings

This manual includes the following four types of warnings to be used for expected hazards during operation and maintenance of the compressor.

Neglecting such warnings may cause accidents, resulting in personal injury or even death.

Also, the compressor or its auxiliary equipment may be heavily damaged. Therefore, be sure to always observe the instructions of the warnings.

DANGER	Indicates an imminently hazardous situation which, if not avoided, will result in serious injury or death.
WARNING	Indicates a potential hazardous situation which, if not avoided, could result in serious injury or death.
CAUTION	Indicates a potential hazardous situation which, if not avoided, may result in minor or moderate injury.
CAUTION	Indicates a potentially hazardous situation which, if not avoided, may result in property damage.
【POINT】	Emphasizes important items and indicates profitable information.

1.3 Remaining Hazard

The following information is provided on the assumption that this compressor is operated, inspected, and maintained while being used in general refrigerating, cold storage, and air conditioning systems. Note that all hazardous sources cannot be predicted for the systems you actually use.

Devise appropriate countermeasures for hazardous sources in your systems.

Table 1-1 Hazardous Sources

	Hazardous Parts	Predicted Hazard	Countermeasures in Operation	Countermeasures in Cleaning, Inspection, and Parts Exchange
A	Driving section	• Contact and entanglement in rotational part • Drop-off of moving part • Recovery after interruption of energy supply	• Installation of guard and cover	• Lockout/tag out of motor main power and control power
B	Head cover	• Damage caused by contacting hot part	• Installation of guard • Wearing protective devices	• Wearing protective devices • Operation with a temperature of 40 °C or less
C	Discharge piping	• Damage caused by contacting hot part	• Installation of guard • Wearing protective devices	• Wearing protective devices • Operation with a temperature of 40 °C or less
D	Unloader solenoid valve	• Electric Shock	• Installation of guard • Wearing protective devices	• Lockout/tagout of control power
E	Heater	• Electric Shock • Burns	• Installation of guard and cover • Wearing protective devices	• Lockout/tagout of the heater power • Wearing protective devices • Operation with a temperature of 40 °C or less
F	Suction (side) shut-off valve	• Contact with and inhale of toxic substances • Low temperature burns	• Wearing protective devices • Sufficient ventilation • Installation of guard	• Wearing protective devices • Sufficient ventilation
G	Discharge (side) shut-off valve	• Contact with and inhale of toxic substances • Burns	• Wearing protective devices • Sufficient ventilation • Installation of guard	• Wearing protective devices • Sufficient ventilation • Operation with a temperature of 40 °C or less
H	Gas purge valve	• Contact with and inhale of toxic substances	• Wearing protective devices • Sufficient ventilation	• Wearing protective devices • Sufficient ventilation
I	Oil drain	• Burns • Contact with toxic substances	• Do not contact with it during operation	• Wearing protective devices • Operation with a temperature of 40 °C or less

	Hazardous Parts	Predicted Hazard	Countermeasures in Operation	Countermeasures in Cleaning, Inspection, and Parts Exchange
J	Noise and vibration	• Damage caused by noise	• Wearing protective devices	—

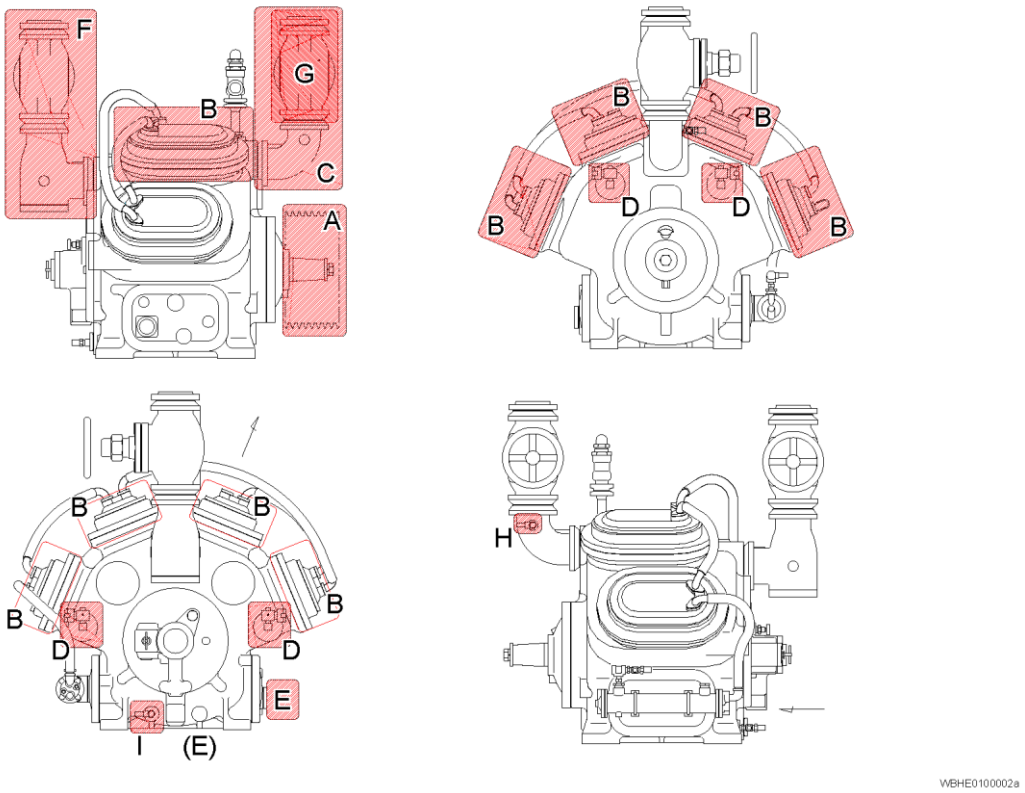

Fig. 1-1 Hazardous Sources

1.4 Safety Devices

For safe use and protection of the compressor, make sure to attach safety devices to your compressor, complying with the regulations and the following descriptions.

To keep safety devices continuously normal, proper and periodical maintenance and inspections are indispensable. They must be performed as an important part of the maintenance/inspection schedule. Provide users of your compressor with necessary information on types, attachment positions, functions, and related devices of the safety devices.

WARNING

- **Check the safety devices after turning on the power and before operation of the compressor. If they do not operate normally, immediately take countermeasures against it.**

1.4.1 Emergency Stop Button

■ Overview/Function/Purpose

Used to stop to the compressor immediately if an emergency occurs in the driving section of the compressor.

■ Installation Positions

In the control board on the compressor and in the operation control room

■ Stop/ Start Methods

Formulate the stop/ start methods of emergency stop button, and make sure to provide users of this compressor with them.

■ Inspection Method/Cycle

The emergency stop button requires operational tests before test operation of compressor and periodically after that. Formulate the inspection method and cycle of emergency stop button, and make sure to provide users of this compressor with the necessary information.

1.4.2 Breakers of Motor Main Power and Control Power (with Lockout/Tagout Mechanisms)

■ Overview/Function/Purpose

When performing work which maybe hazardous (especially during cleaning, maintenance, inspection, and troubleshooting) lockout/tag out mechanisms must be installed on the breakers of motor main power and control power.

■ Installation Positions

Breakers of motor main power and control power

■ Methods of Performing and Releasing Lockout/Tagout

Make sure to formulate methods of performing and releasing lockout/tagout referring to the regulations created by Occupational Safety & Health Administration (OSHA), and provide users of this compressor with necessary information.

■ Inspection Method/Cycle

Make sure to formulate the inspection method and cycle of lockout/tagout mechanisms, and provide users of this compressor with necessary information.

1.4.3 Safety Cover (Driving Section)

■ Overview/Function/Purpose

Preventing contact and entanglement in the driving section of this compressor.

■ Installation Positions

Driving section

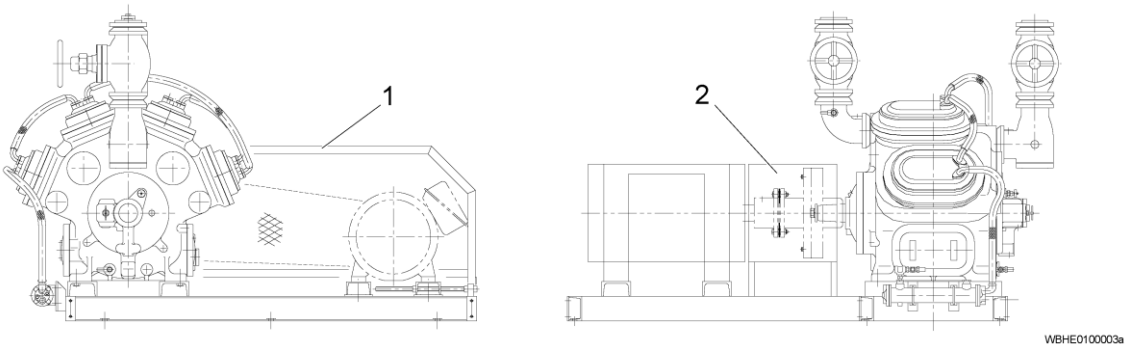

Fig. 1-2 Attachment of Driving Section Safety Cover

No.	Description
1	Driving section safety cover (for belt)

No.	Description
2	Driving section safety cover (for coupling)

■ Inspection Method/Cycle

Make sure to formulate an inspection method and cycle for the safety cover, and provide users of this compressor with necessary information.

1.4.4 Safety Valve

■ Overview/Function/Purpose

A safety valve is used to prevent the compressor from bursting when its internal pressure rises abnormally.

■ Installation Positions

Install a safety valve on discharge outlet between the shut-off valve (service valve) and the compressor. Set the safety valve so that it operates even when the shut-off valve is closed during operation.

⚠ WARNING

- **Properly process the discharge outlet of safety valve according to the type of refrigerant, following the local, state, federal acts and regulations. If ammonia is discharged into the atmosphere, it can cause irreparable health damage. And if it is discharged into enclosed space, such as inside of the machine room, it will cause serious problems such as the deficiency of oxygen.**

【POINT】

- The size of the safety valve required differs as the local, state, federal acts and regulations differ according to the country and regions where the compressor is used. If there are any questions about installing the safety valves, please contact your local sales offices or service centers.

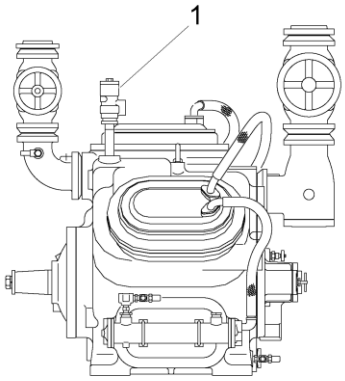

WBHE0100004a

Fig. 1-3 Attachment Example of Safety Valve

No.	Description
1	Safety valve

■ Settings

Set the pressure of safety valve to the design pressure of compressor or lower. Make sure to formulate the setting of safety valve, and provide users of this compressor with necessary information.

■ Inspection Method/Cycle

The safety valve requires periodical inspection. Formulate the inspection method and cycle of the safety valve, and make sure to provide users of this compressor with necessary information.

1.4.5 Automatic Control and Protection Equipment of WBHE Compressor

■ Overview/Function/Purpose

- Oil pressure protection equipment (OP)

  When the oil pressure in compressor (the subtraction of the suction pressure in crank case from the value on oil pressure gauge (apparent pressure)) is lowered by a deficiency in lubricating oils, clogging of the filter, and interfusion of refrigerant, automatically shuts off the motor circuit and stops the operation of compressor. Enabling the protection of the compressor.

- High pressure protection equipment (HP)

  When the discharge pressure on compressor becomes abnormally high because the compressor is operated incorrectly or the water supply from the condenser is stopped, the compressor motor circuit shuts off. Prevents repturing of the devices from occurring.

- Low pressure control equipment (LP)

  The number of capacity control steps in the compressor is determined by the number of cylinders.

  Generally two cylinders are considered one bank. Therefore, capacity control of four steps is available for eight cylinders, three steps for six cylinders, and two steps for four cylinders. Capacity control is performed by detecting suction pressure.

  For this detection, the low pressure control switch is used. It automatically controls opening/closing of the solenoid valve connected to the unloader piston in the capacity control mechanism of compressor.

■ Connecting Positions

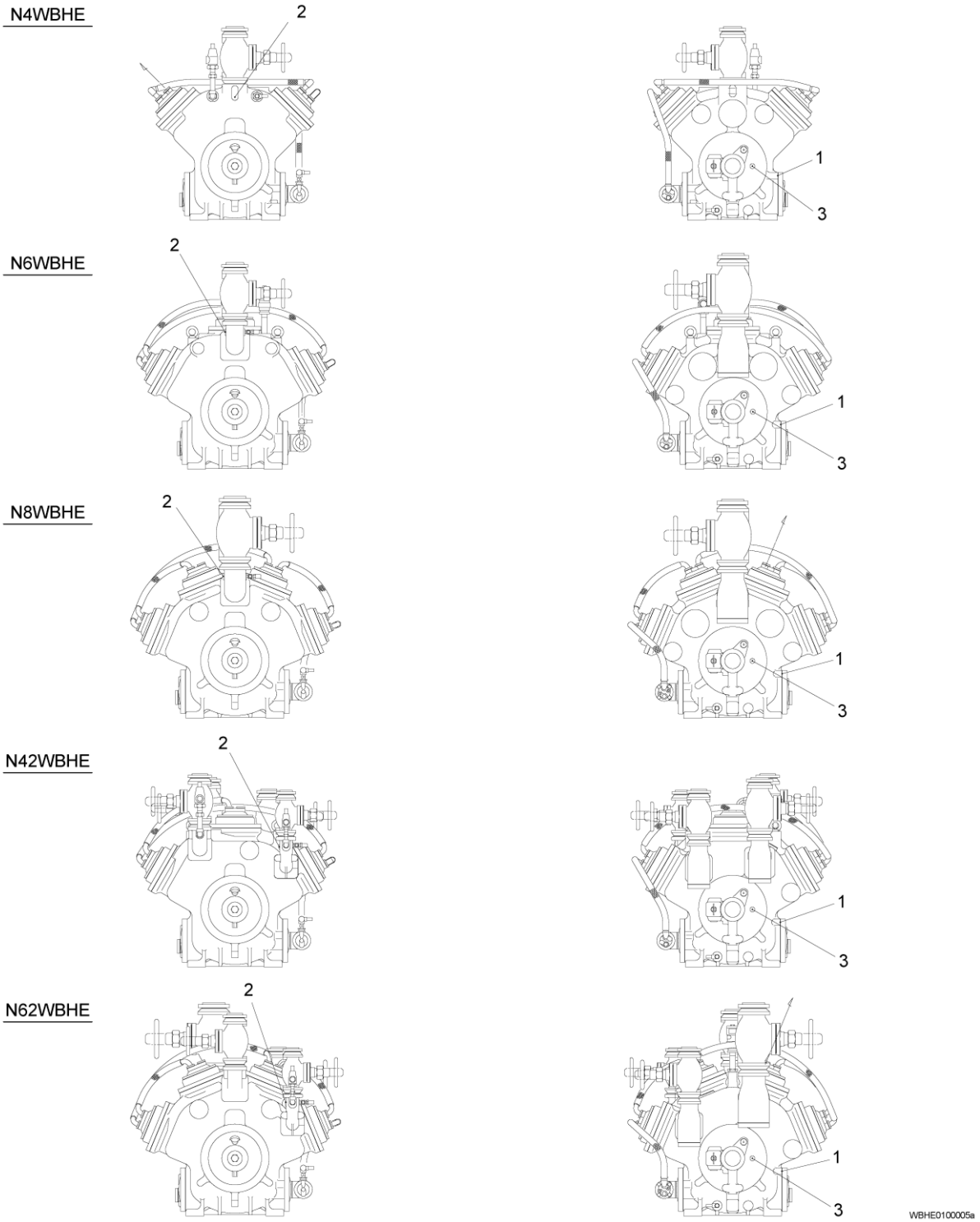

Fig. 1-4 Connections of Oil Pressure Protection Equipment (OP) High Pressure Protection Equipment (HP) Low Pressure Control Equipment (LP)

No.	Description
1	Low pressure gauge connection 3/8" × φ 6 (LP/OP)
2	High pressure gauge connection 3/8" × φ 6 (HP)

No.	Description
3	Oil pressure gauge connection 1/4" × φ 6 (OP)

■ Settings

Referring to the table below, formulate the settings of oil pressure protection equipment (OP) high pressure protection equipment (HP) low pressure control equipment (LP), and make sure to provide users of this compressor with necessary information. Refer to "4.4.2 Settings" for details on setting specification.

Table 1-2 Setting Examples

	Enabled (ON)	Disabled (OFF)	Timer	Recovery
Oil pressure decrease protection (OP)	Low pressure + 0.10 Mpa	Low pressure + 0.12 Mpa	30 seconds	Manual recovery
High pressure protection (HP)	2.6 MPaG or lower (North America is 1.96MPaG)	—	None	Manual recovery
Low pressure control (LP)	Depends on refrigerant and system in use			Automatic recovery

【POINT】

- For High pressure protection (HP), set lower value than the initial discharge pressure of the safety valve. Also, according to the refrigerant and system in use, set the value which enables protection equipment to detect an error immediately. Measuring pressure electrically and generating an alarm by a control circuit (such as sequencer), is one of the most effective methods to generate a pre-alarm when the pressure is approaching the abnormal value.

■ Inspection Method/Cycle

Protection equipment requires operational tests and checks of scale markings for set value before test operation of compressor and periodically after that. Formulate the inspection method and cycle of each piece of protection equipment, and make sure to provide users of this compressor with necessary information.

⚠ WARNING

- **If operational test of High pressure protection equipment (HP) is set to high it may cause the rupture of devices. Make sure to perform the test at the normal operation pressure or below.**

CAUTION

- **For operational test, use devices such as pressurize tester to check that alarms and switches operate normally. Do not operate the compressor with all the valves closed, or in any other dangerous conditions.**

CAUTION

- **If oil pressure protection (OP) or High pressure protection (HP) operates, make sure to eliminate the cause of it before re-starting the compressor.**

1.4.6 Water Failure Alarm

■ Overview/Function/Purpose

Prevents the head cover and lubricating oils from becoming too hot.

Installation Positions

Cooling water system

■ Settings

Set the water failure alarm, and make sure to provide users of this compressor with necessary information.

■ Inspection Method/Cycle

The water failure alarm requires operational test before test operation of compressor and periodically after that. Formulate the inspection method and cycle of water failure alarm, and make sure to provide users of this compressor with necessary information.

1.4.7 Oil Heater

CAUTION
● **If the heater is energized without oil, the heater becomes overheated, resulting in burnout (dry-burning). When energizing the heater, always pay attention to the oil level.**

■ Overview/Function/Purpose

The oil heater is a cartridge type sheathed heater. It is pressure-proof sealed type with heating wires wrapped with insulator and externally sealed with stainless tube. It is designed for maximum heat.

The oil heater is used to prevent refrigerant from dissolving in the oil and from condensing in the crankcase. It is used during stoppage of compressor, not during operation.

■ Installation Positions

The thermoswitch which controls temperature of heater is attached to the heater.

■ Settings

Formulate the setting of thermoswitch, and make sure to provide users of this compressor with necessary information.

■ Inspection Method/Cycle

The thermoswitch requires operational test before test operation of compressor and periodically after that. Formulate the inspection method and cycle of thermoswitch, and make sure to provide users of this compressor with necessary information.

1.5 Example of Material Safety Data Sheet (MSDS)

Material Safety Data Sheet for Chemical Substances

(NOTE: This material is an extract from the guidance regarding the indication on hazardousness/harmfulness of chemical substances for occupational safety and health (general rules).)

Prepared by (or name of corporation)

Address
Department/Section in charge : Staff in charge :
Phone number :
Fax number :
Phone No. in emergency :

Prepared/revised: (Date)

Name of chemical substance

Specification of substance
- Distinction of single substance or mixture
- Chemical name
- Component and content
- Chemical formula or structural formula
- Official gazette notice file No. (OSHA, Chemical Examination Law)
- CAS No.
- U.N. classification & U.N. No.

Type of hazardousness/harmfulness

Emergency measure
- When entered eyes
- When stuck on the skin
- When inhaled
- When swallowed

Measures at a fire
- Fire extinguishing method
- Fire extinguishing agent

Measures at leakage

Precautions for handling and storage
- Handling
- Storage

Exposure preventive measures
- Controlled density
- Allowable density
  - Japan Industrial Hygiene Institute (Edition)
  - ACGIH (Edition)
  - Other exposure limit value, reference value
- Measures for facility
- Protective equipment
  - Breathing protective equipment
  - Goggles
  - Protective gloves
  - Protective clothing

Physico-chemical property

Appearance						
Boiling point	°C	Steam pressure	Pa	(	°C)	Volatile
Melting point	°C	Specific gravity or bulk specific gravity		(	°C)	
Solubility Water			%	(	°C)	
Other solvent	( )		%	(	°C)	
Others						

Hazardousness information (Stability, reactivity)

Flash point	:	°C	Fire point	:	°C
Explosion limit Upper limit	:	%	Lower limit	:	%
Inflammability	:				
Flammability	: (Autogenous ignition, reactivity for water)				
Oxidization	:				
Self-reactivity/explosiveness	:				
Dust explosiveness	:				
Stability/Reactivity	:				
Others	:				

Harmfulness information (including a human case, epidemiological information)

Corrosiveness	:
Stimulativeness (Skin, eyes)	:
Sensitization	:
Acute toxicity (incl. 50% lethal dose)	:
Subacute toxicity	:
Chronic toxicity	:
Cancer source property	:
Variation source property (Micro-organism, chromosomal aberration)	:
Reproductive toxicity	:
Teratogenicity	:
Others (incl. toxic gas generation when reacted on water)	:

Environmental impact information

Precautions for scrapping

Precautions for transportation

Applicable laws

Others

(1) If description space is not enough, attach detailed information.

(2) Reference for inquiry on the contents of description, quoted references, etc.

2 Specification and Configuration of Compressor

2.1 Specification of Compressor

2.1.1 Identification

2.1.1.1 Compressor Configuration

The configuration of WBHE series is as follows.

Table 2-1 Compressor Configuration

		Model	Model Specification
Single-stage compressor		4WBHE/6WBHE/8WBHE/8WBHEH	Standard specification B.B specification Booster specification
	100% unload specification	6WBHEU/8WBHEU/8WBHEHU	
Single two-stage compressor		42WBHE/62WBHE	Standard specification

The B.B specification cannot be operated with suction pressure lower than atmospheric pressure.

2.1.1.2 Name Plate

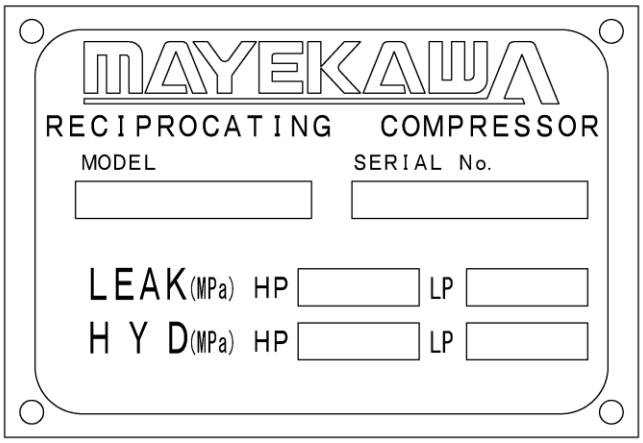

WBHE0200018a

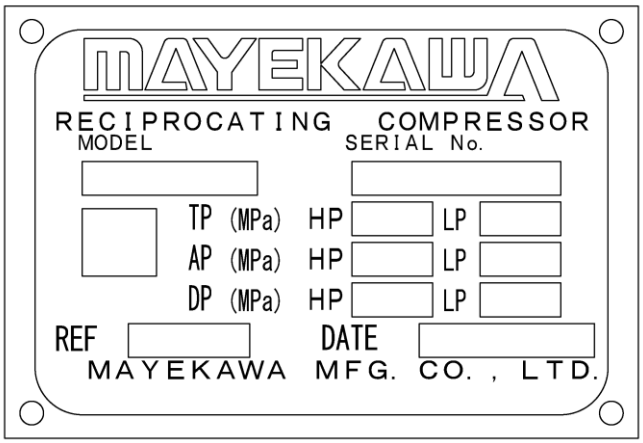

WBHE0200027a

【POINT】

- The name plate differs depending on the region, country, and regulation. (The above name plate is an example.)

2.1.1.3 Code Designation of WBHE Series

F 8 WBHE H U - BB S

(1) (2) (3) (4) (5) (6)

wbhe0200017a

Item	Designation	Code	Details
(1)	Refrigerant type	N	NH_3
		F	HFCs, R22
		P	Propane
(2)	Number of cylinders	4	Single-stage, four cylinders
		6	Single-stage, six cylinders
		8	Single-stage, eight cylinders
		42	Single two-stage, four cylinders (low stage)/two cylinders (high stage)
		62	Single two-stage, six cylinders (low stage)/two cylinders (high stage)
(3)	Discharge pressure	Not required	Standard
		H	High operation pressure (For single-stage with eight cylinders only)
(4)	Capacity control mechanism	Not required	Standard
		U	100% unload specification
(5)	Suction pressure	Not required	Standard and booster
		BB	High suction pressure (Rolling bearing)
(6)	Piston specification	Not required	Standard
		S	Four piston rings

【POINT】

- Refer to the specification document for details of the specification.
- The code for WBHE series is engraved in "MODEL" on a name plate.
- WBH series does not have "Piston Specification".

2.1.1.4 Refrigerant and its Cooling Method

The cooling specification for head cover and oil cooler is roughly classified as below depending on the type of refrigerant.

Table 2-2 Refrigerant. and Cooling Method

Refrigerant	Cooling Specification
NH_3	Water-cooling head cover + Water-cooling oil cooler
HFCs, R22, propane	Water-cooling head cover + Water-cooling oil cooler Water-cooling head cover + Direct expansive oil cooler Air-cooling head cover + Water-cooling oil cooler Air-cooling head cover + Direct expansive oil cooler

2.1.2 Specification

2.1.2.1 Specification

Table 2-3 Specification

Item	Unit	4WBHE	6WBHE/ 6WBHEU	8WBHE 8WBHEH/ 8WBHEU 8WBHEHU	42WBHE	62WBHE
Refrigerant	—	NH_3, HFCs (R404A, R507A, R134a, R407C, R23), R22, propane[1)]				
Number of Cylinders	—	4	6	8	4+2	6+2
Bore	mm	130				
Stroke	mm	100				
Minimum rotation	rpm	800				
Maximum rotation	rpm	1200				
Displacement (when the maximum rotation is 1200 rpm)	m^3/h	382	573	765	382	573
Rotational direction[2)]	—	Clockwise (when seen from shaft end)				
Capacity control range	%	100-50 (-0)	100-66-33/ 100-66-33-0	100-75-50-25/ 100-75-50-25-0	100-50	100-66-33
Oil filling amount (excluding the oil cooler)	ℓ	20	24	26	25	26
GD^2 (excluding the flywheel)	$kg \cdot m^2$	1.650	1.790	1.903	1.790	1.903
Product weight[3)] (Excluding the flywheel and other optional parts)	kg	1020	1200	1450	1260	1510
Product weight[3)] including the flywheel[4)] (excluding other optional parts)	kg	1100	1300	1570	1340	1610
Cooling water	—	Sweet water ethylene glycol (less than 50% concentration) propylene glycol (less than 50% concentration)				

1) When R23 is used, the special specification should be applied. Contact us for details.

2) This rotational direction is the positive rotation and the standard direction. This can be changed to the negative rotation to order or by adjustment.

3) This weight includes the water-cooling head cover, water-cooling oil cooler, and stop valve manufactured by Mayekawa.

4) For direct driving, install the flywheel.

【POINT】

- This product is designed to be used indoor and on land. Outdoor or shipboard application is possible with the correct options. Contact us for outdoor or shipboard application.
- The standard head cover and oil cooler are for use with potable water. Seawater specification is also available if requested. (The oil cooler for use with seawater is direct expansion type.)
- Our compressors come complete with Flywheels. Direct coupling can be used please contact your nearest Mayekawa location. (Refer to "2.3 V-Belt and Direct Coupling".)

2.1.2.2 Design Pressure

Table 2-4 Design Pressure

Item	Unit	High Pressure Section	Low Pressure Section
Design pressure	MPaG	2.6(*)	1.46

【POINT】

- The design pressure differs depending on the regulation of each district or country. "Design pressure" in "High Pressure Section" in this table refers to the maximum value attained by the compressor. Therefore, the actual design pressure in the high pressure section can be this value or less according to the regulations. Check the actual pressure referring to the name plate and the specification document.
- North America uses Mayekawa shut off valves which are rated at 1.96 MPaG
- For the low pressure section, pressure may be required to exceed the value in this table. Contact us in such case.

2.1.3 Operating Limit

The following is the operating limit of WBHE series reciprocating compressor.

Table 2-5 Operating Limit

Item	Applicable Model	Limit Value	Remarks
Maximum discharge pressure [MPaG]	Single-stage compressor	2.36(*)	8WBHE/8WBHEU ≤ 1.96 Booster specification < 0.6 North America MDP is 1.96 MPaG
	Single two-stage compressor	1.96	
Minimum discharge pressure [MPaG]	All models	0.6	Except the booster specification
Maximum suction pressure [MPaG]	Single-stage compressor	0.588 [2) 3)]	Standard specification ≤ 0.35 Booster specification ≤ 0.05
	Single two-stage compressor	0.35	
Maximum intermediate pressure [MPaG]	Single two-stage compressor	1 000 rpm: 0.822 1 100 rpm: 0.656 1 200 rpm: 0.538	HFCs, R22
Minimum suction pressure [MPaG]	All models	-0.0733	B.B specification > 0
Maximum differential pressure [MPa]	Single-stage compressor	2.00	= Pd – Ps [1)] 8WBHE/8WBHEU ≤ 1.47
	Single two-stage compressor	1.52	
Maximum compression ratio [-]	All models	NH_3: ≤ 9 HFCs: ≤ 10	Discharge temperature limit
Minimum compression ratio [-]	All models	≥ 1.5	
Minimum oil supply pressure [MPaG]	All models	Ps +0.15	
Maximum oil supply pressure [MPaG]	All models	Ps +0.4	
Maximum cooling water pressure [MPaG]	All models	0.5	
Minimum cooling water pressure [MPaG]	All models	0.2	
Maximum discharge temperature [deg.C]	All models	NH_3: 140 HFCs, R22, propane: 120	
Minimum suction temperature [deg.C]	All models	-60	
Maximum oil supply temperature [deg.C]	All models	50	Oil cooler outlet
Minimum oil supply temperature [deg.C]	All models	30	This should be higher than ambient temperature.
Suction superheat [K]	All models	> 0, ≤ 20	
Discharge superheat [K]	All models	≥ 15	
Maximum cooling water temperature [deg.C]	All models	50	Temperature at the jacket outlet Use limit of the cooling water hose
Minimum cooling water temperature [deg.C]	All models	15	Temperature at the jacket inlet
Maximum/minimum rotation speed (rpm)	All models	1200 / 800	The rotation speed can be controlled.
Maximum shaft power of belt-drive [kW]	All models	114	Differs depending on the belt type.

1) Ps: Suction pressure, Pd: Discharge pressure

2) Standstill is included. Standstill of booster specification is the same as the one of standard specification.

3) If this value exceeds 0.35 MPa, B.B specification should be applied.

【POINT】

- Contact us if you have any questions about operation limits.

2.1.4 External Dimensions

【POINT】

- There is no change in the external dimensions for WBHE and WBH series.

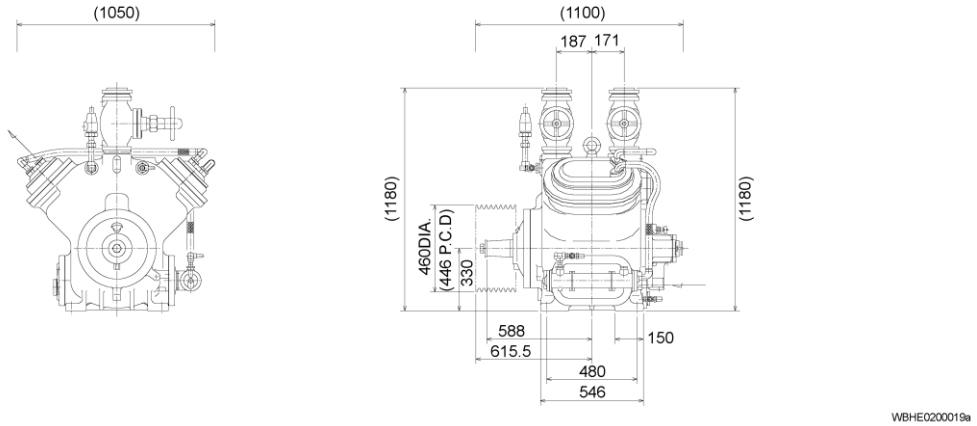

Fig. 2-1 External Dimensions of N4WBHE

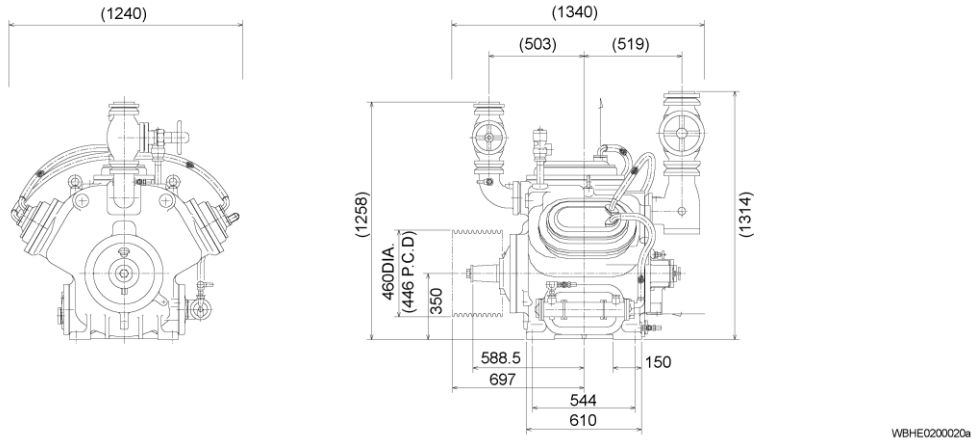

Fig. 2-2 External Dimensions of N6WBHE

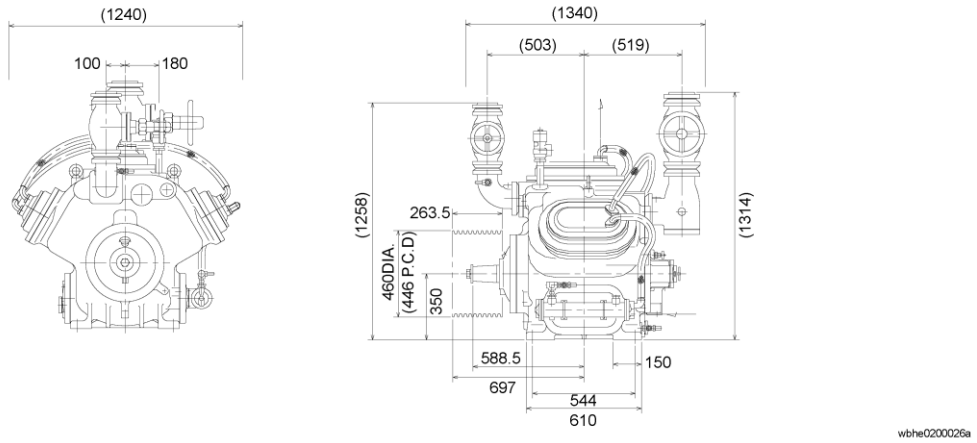

Fig. 2-3 External Dimensions of N6WBHEU

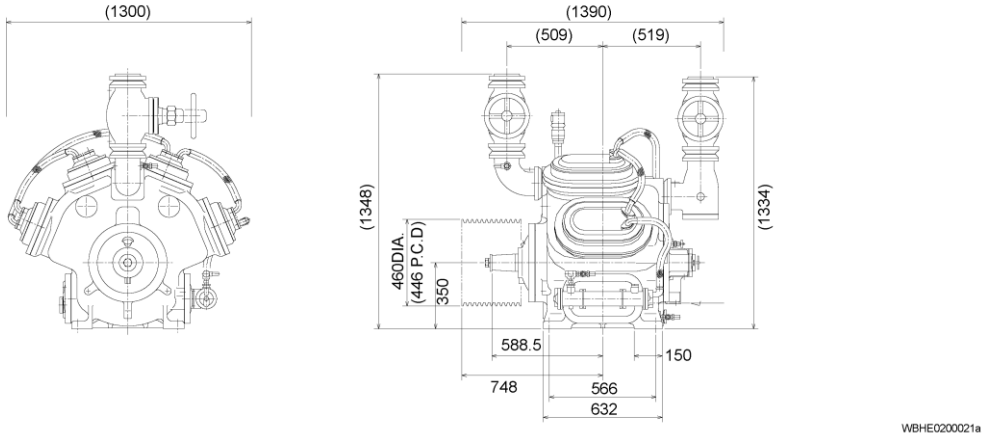

Fig. 2-4 External Dimensions of N8WBHE

【POINT】

- The external dimensions of N8WBHEH, N8WBHEU, and N8WBHEHU are the same as of N8WBHE.

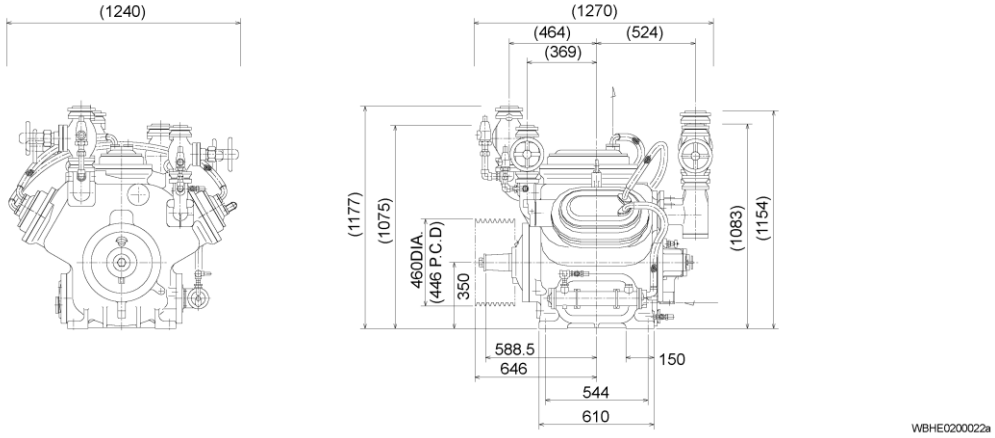

Fig. 2-5 External Dimensions of N42WBHE

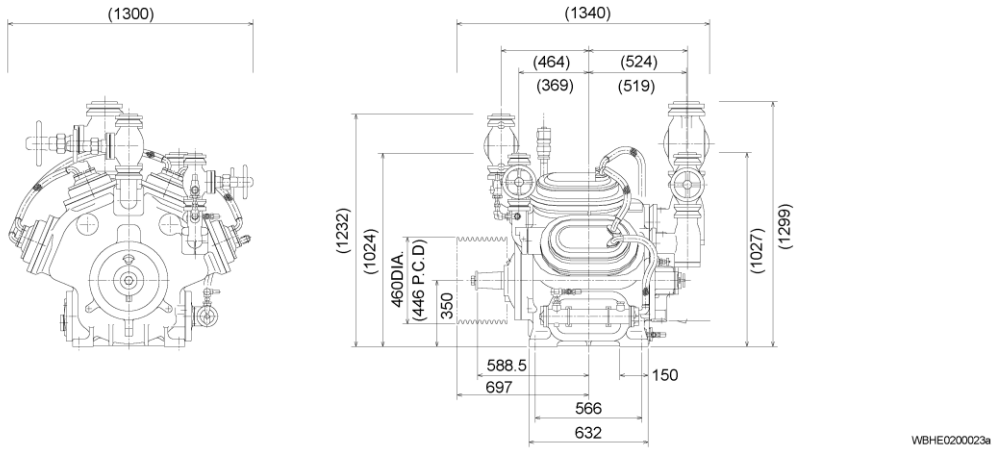

Fig. 2-6 External Dimensions of N62WBHE

2.2 Configuration of Compressor

This compressor (MAYEKAWA WBHE series reciprocating compressor) is designed for improving WB series.

WBHE is substantially improved over and above their configuration versus the conventional WB series.

2.2.1 Updated Contents of Configuration

The following is the updated contents of this WBHE compressor.

2.2.1.1 Crankcase

The crankcase of this compressor has a bearing head cast into it; therefore, the bearing head equipped in WB series has been eliminated. (Refer to Fig. 2-7)

Due to this change, the mechanism of equalizing the pressures in the crank chamber and the suction chamber is changed. (Refer to Fig. 2-8)

The cooling jacket casing is also eliminated.

【POINT】

- Assembly and removal of crankshaft can only be performed from the oil pump side.

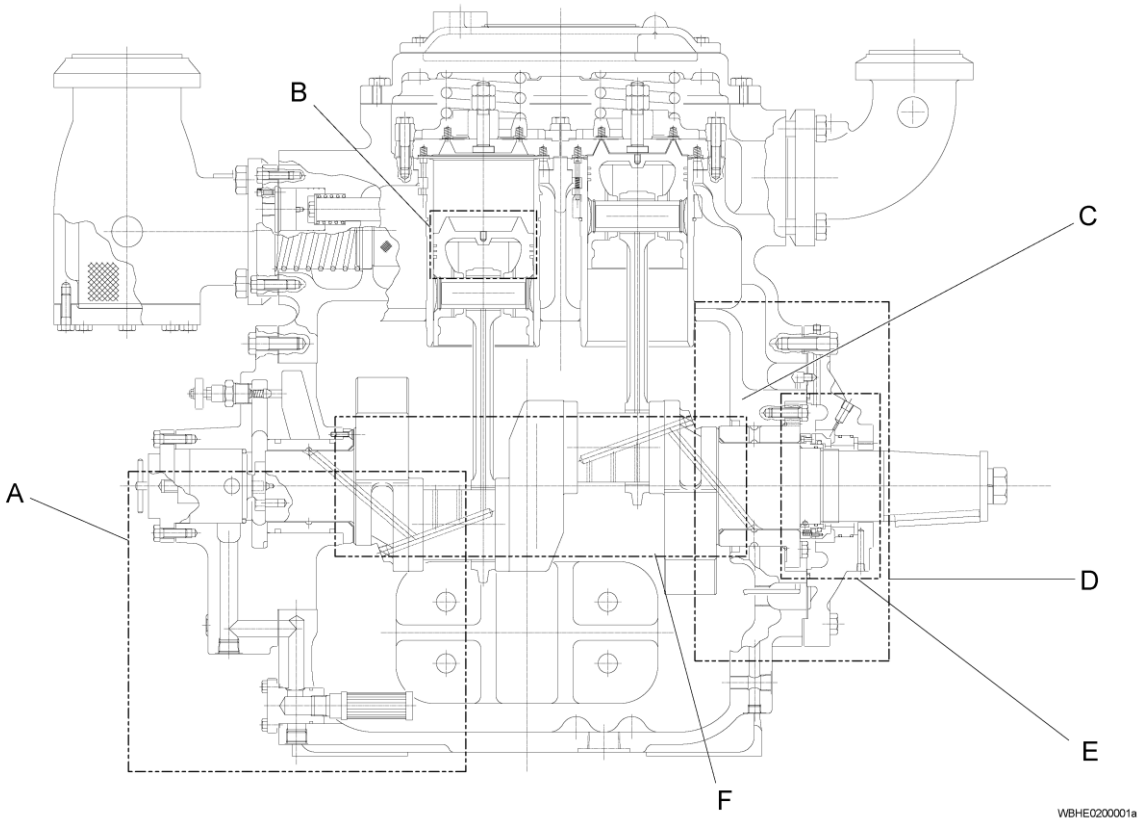

Fig. 2-7 Cross-sectional View of WBHE

Symbol	Description	Remarks
A	Oil lubrication route of oil pump	Refer to Fig. 2-11.
B	Piston ring	Refer to Fig. 2-12.
C	Bearing head function section	
D	Gas pressure equalization route	Refer to Fig. 2-8.
E	Shaft Seal	Refer to Fig. 2-9.
F	Thrust load holding mechanism	Refer to Fig. 2-10.

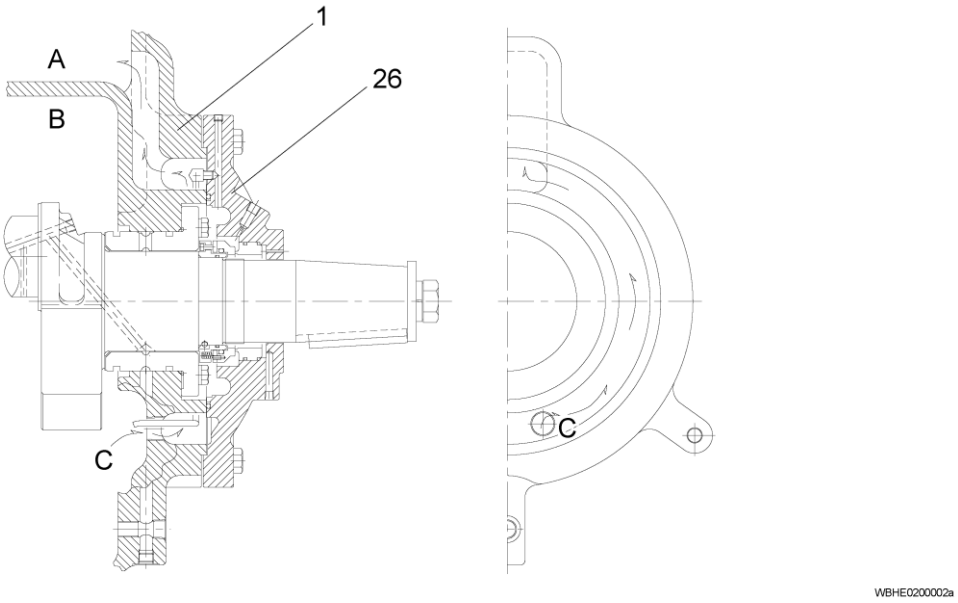

Fig. 2-8 Gas Pressure Equalization Mechanism in Low Pressure Section

Symbol	Description
A	Suction chamber
B	Crank chamber
C	Gas flow

No.	Description
1	Crankcase
26	Cover plate

2.2.1.2 Shaft Seal

A new-model shaft seal, one that is currently being been used in K series, was adopted.

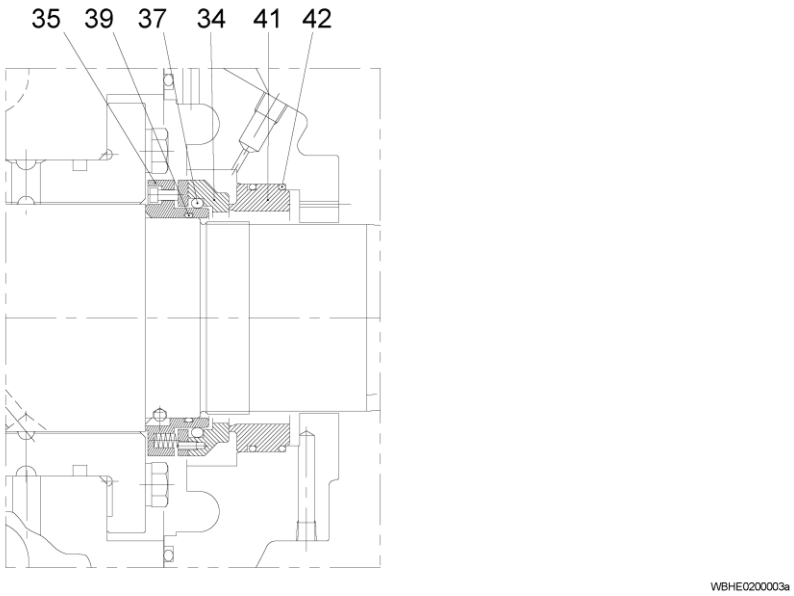

Fig. 2-9 Shaft Seal

No.	Description
34	Seal ring
35	Drive collar assembly
37	"O" ring (JIS B 2401 P110)

No.	Description
39	"O" ring (JIS W 1516 G19)
41	Floating seat
42	"O" ring (JIS W 1516 G27)

2.2.1.3 Thrust Load Bearing

If the suction pressure is negative, the crankshaft moves to the oil pump side (to the left in the figure below). If the suction pressure is positive, the crankshaft moves to the opposite side of the oil pump (to the right in the figure below). Due to this, the thrust load generated as indicated by the arrows in the figure below is held at two positions; at the thrust bearing and the main bearing. Therefore, the lock nut used in WB series to retain the shaft seal collar (and position the crankshaft) is eliminated.

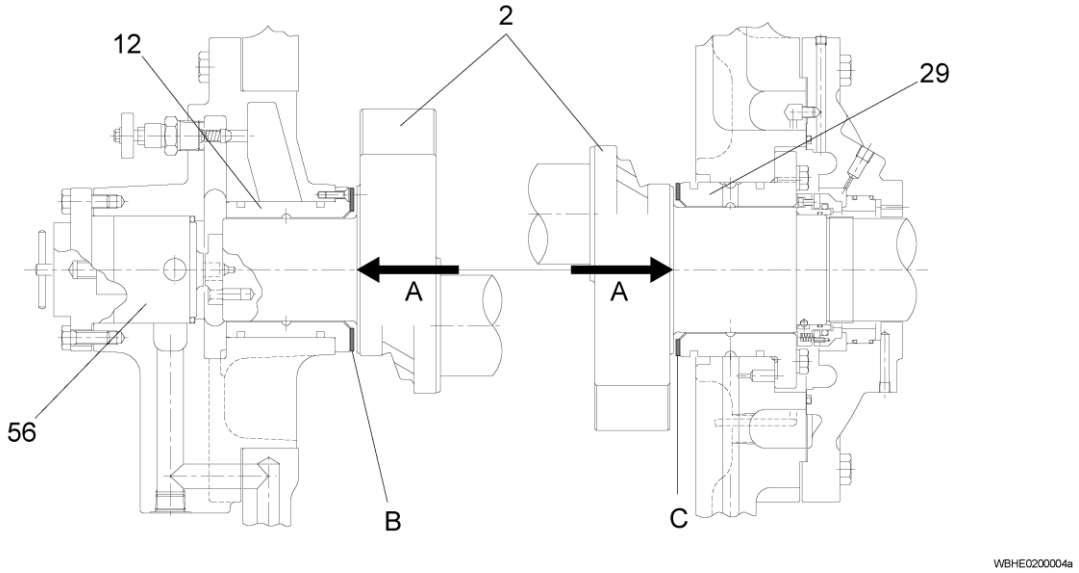

Fig. 2-10 Thrust Load Holding Mechanism

Symbol	Description
A	Thrust load
B	Load holding surface when the suction pressure is less than 0 MPaG (negative pressure)
C	Load holding surface when the suction pressure is more than 0 MPaG (positive pressure)

No.	Description
2	Crankshaft
12	Main bearing
29	Thrust bearing
56	Oil pump

2.2.1.4 Oil Route of Oil Pump

The oil route of oil pump has changed. The part of the diagram indicated with rightward sloped lines is the crankcase, and the part indicated with leftward sloped lines is the main bearing. The connection part of crankcase and main bearing head in the oil route has been routed to the flange, and a gasket is used to improve the sealing performance within the route.

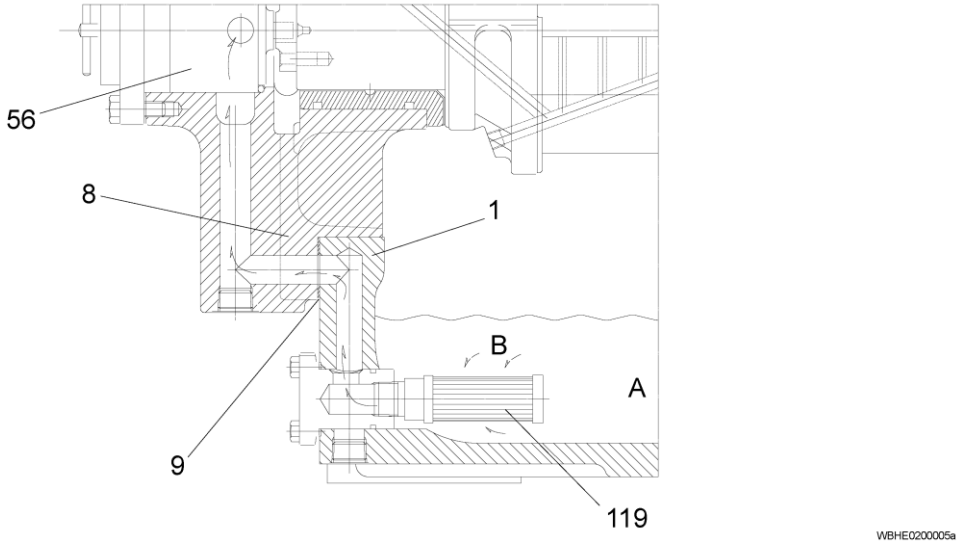

Fig. 2-11 Oil Route of Oil pump

Symbol	Description
A	Oil
B	Oil flow

No.	Description
1	Crankcase
8	Main bearing head
9	Main bearing head gasket
56	Oil pump
119	Oil strainer

2.2.1.5 Piston Rings and Piston

The specifications of the piston rings and the piston have changed. The piston rings are reduced from four to three and changed in thickness to reduce friction. Therefore, the piston has also changed.

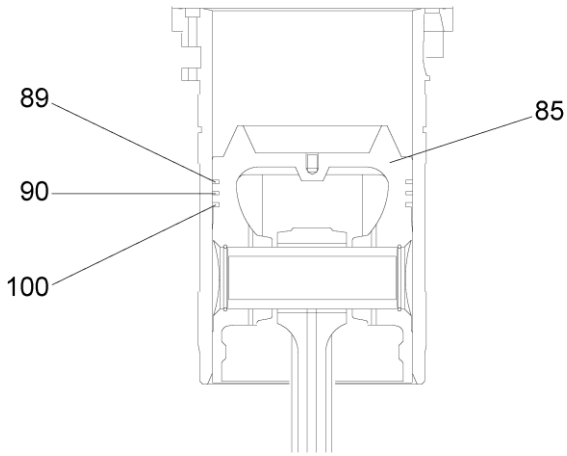

WBHE0200024a

Fig. 2-12 Piston Rings and Piston

No.	Description
85	Piston
89	Piston ring 1st

No.	Description
90	Piston ring 2nd
100	Oil ring 3rd (with coil)

【POINT】

- This change is applied to the WBHE three-ring specification only.
- Refrigerant R23 and the shipboard compressor that can be shifted between two-stage and single-stage (NH_3) are four-ring specification (the code of (6) Piston specification in "2.1.1.3 Code Designation of WBHE Series" is "S").

2.2.1.6 Discharge Valve Cage and Valve Plate

The discharge valve cage and valve plate in the single-stage compressor and the high stage of single two-stage compressor, have changed.

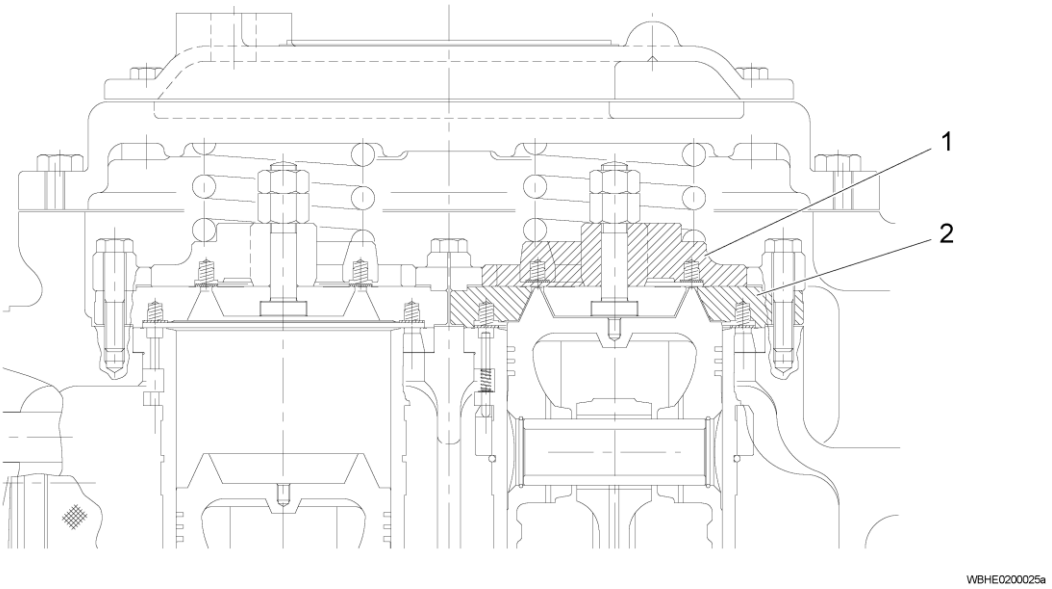

Fig. 2-13 Discharge Valve Cage and Valve Plate

No.	Description
1	Discharge valve cage

No.	Description
2	Valve plate

The models of discharge valve cage and valve plate are set for WBHE as shown in the table below.

Fig. 2-6 Models of Discharge Valve Cage and Valve Plate

	WBHE	Remarks
Discharge valve cage assembly model	WCN-II	WCRH for refrigerant HFCs (except R23)
Valve plate model	WN-II	—

【POINT】

- The conventional discharge valve cage is used for HFC refrigerants (except R23). (Model: WCRH)
- The model of discharge valve cage in the low stage of single two-stage compressor that uses propane as refrigerant is WCN-II.
- The models of discharge valve cage and valve plate in use are engraved as listed above.
- WBH series is not applicable to the above description.
- For the model details of valve plate and discharge valve cage, refer to "7.4 Specification List of Suction Valve and Discharge Valve".

2.2.1.7 Crankshaft of Single-stage Eight-cylinder Compressor

The material of crankshaft in single-stage eight-cylinder compressor has two types depending on the operational conditions. For the specification of high operational pressures, stronger material is used.

Table 2-7 Compressor Configuration

Specification	Model
High operation pressure	8WBHEH
The operable pressure range is the same as that of WB series.	8WBHE

2.2.1.8 Application for 0% Load Operation (Optional Specification)

0% load operation can be performed with 6WBHE and 8WBHE/8WBHEH as an optional specification. However, for 6WBHE with the optional function, the position of discharge piping differs from WB series (6WB). For 6WBHE without optional function, the position of discharge piping is common to that of WB series (6WB). The position of discharge piping of 8WBHE is common regardless of optional function, and common to that of WB series (8WB).

"U" is added to the model. (Example: 8WBHEU)

0% load operation can be performed with 4WBHE, 42WBHE, and 62WBHE the same as with WB series (however, only in the low stage for single two-stage compressor).

【POINT】

- This function is provided for a special purpose. This does not allow for a long-time operation under 0% load status. In 0% load operation, gas is not exhausted from the compressor, resulting in a rapid rise of the gas temperature inside the case. Due to this, the reference operation time is approx. two to three minutes. (The operation time differs depending on the refrigerant. Contact us for details.)

2.2.2 Development View and Parts List

■ **Compressor Assembly View**

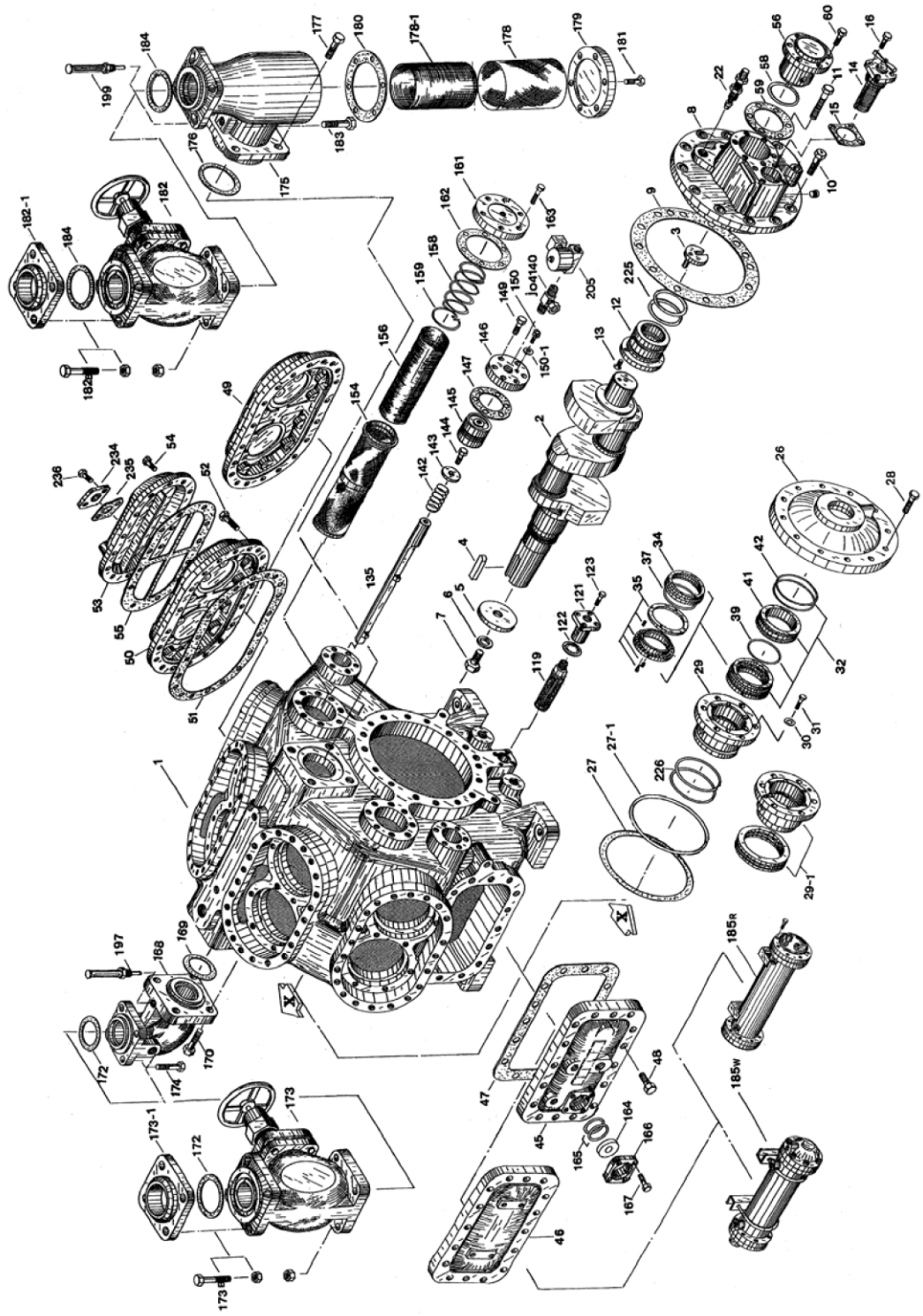

Fig. 2-14 Compressor Assembly View

■ View of the Cylinder

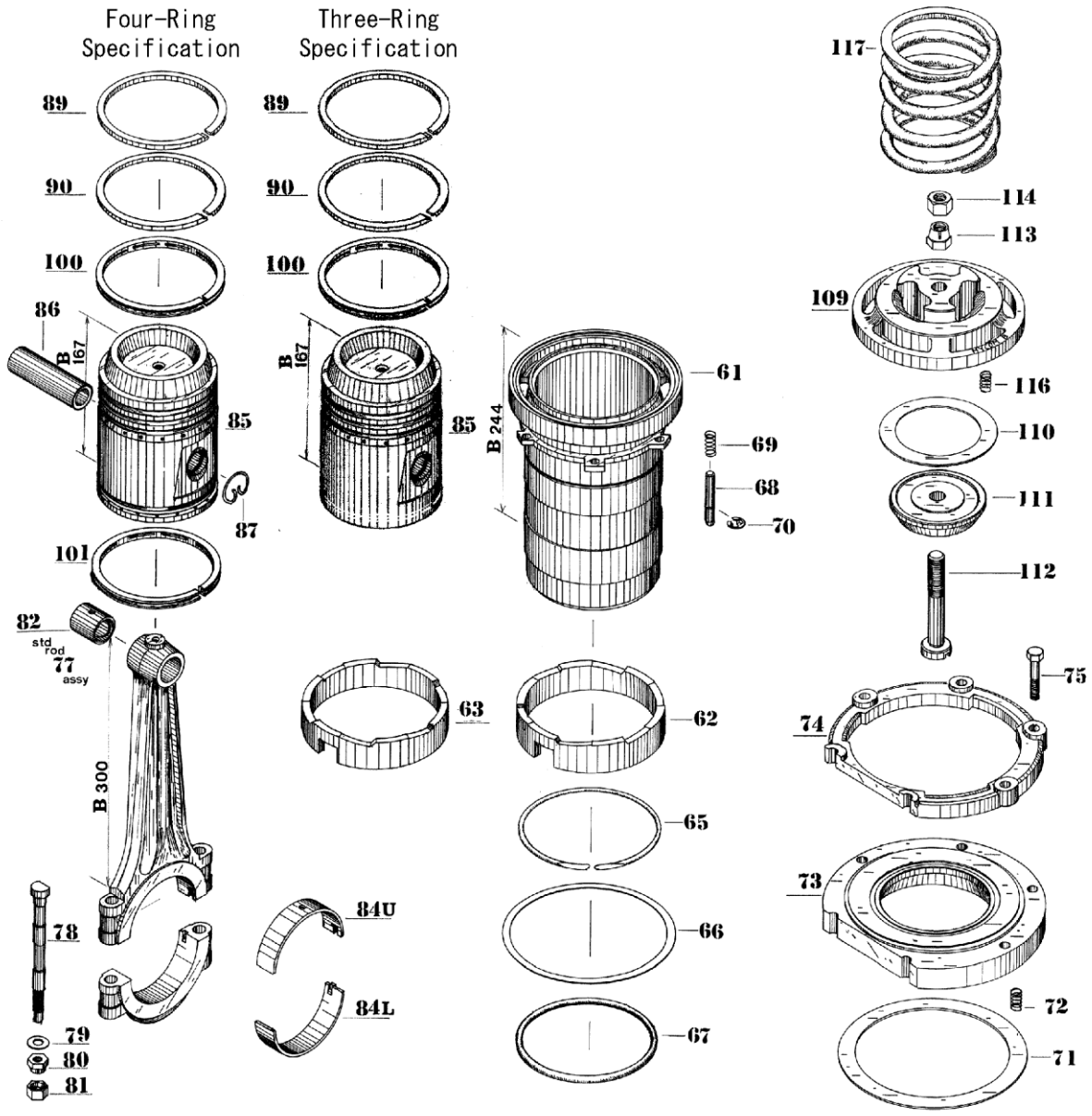

Fig. 2-15 View of the Cylinder

■ View of the Thrust Bearing

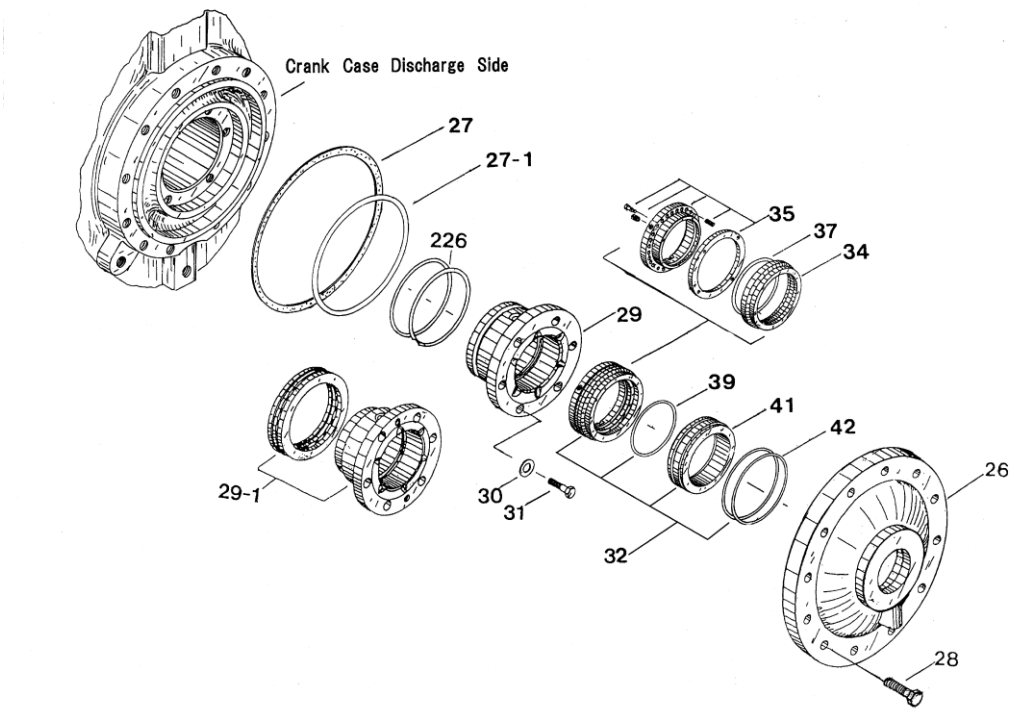

Fig. 2-16 View of the Thrust Bearing

■ Exploded View of the Main Bearing

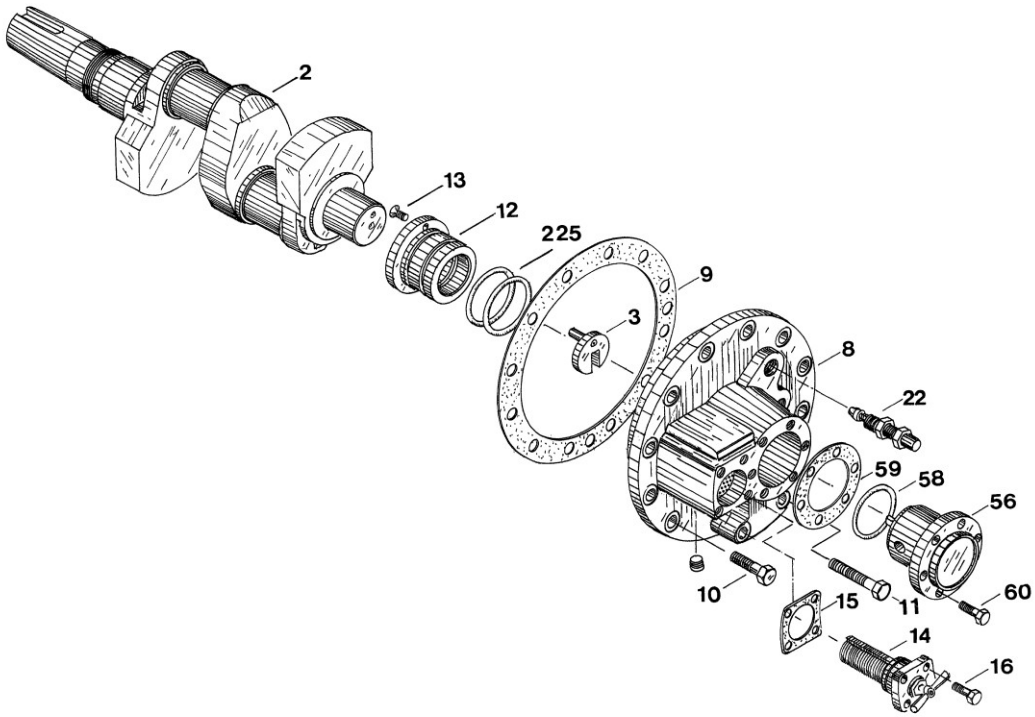

Fig. 2-17 Exploded View of the Main Bearing

■ Parts List

Part Number	Part Name	Remarks
1	Crankcase	
2	Crankshaft	
3	Drag crank	
4	Shaft key	
5	Flat washer	
6	Lock washer	
7	Flywheel set bolt	
8	Main bearing head	
9	Main bearing head gasket	
10	Main bearing head hexagon head bolt (short)	
11	Main bearing head hexagon head bolt (long)	
12	Main bearing	
225	Main bearing "O" ring (for single two-stage compressor)	
13	Main bearing screw	
14	CUNO filter assembly	
15	CUNO filter cover gasket	
16	CUNO filter cover hexagon head bolt	
22	Oil pressure regulating valve assembly	
26	Cover plate	
27	Cover plate gasket	
27-1	Cover plate "O" ring	
28	Cover plate hexagon head bolt	
29	Thrust bearing	
29-1	Thrust bearing (B.B type)	
226	Thrust bearing "O" ring (for single two-stage compressor)	
30	Thrust bearing hexagon head bolt washer	
31	Thrust bearing hexagon head bolt	
32	Shaft seal assembly	
34	Seal ring	
37	Seal ring "O" ring	
35	Drive collar assembly	
39	Drive collar "O" ring	
41	Floating seat	
42	Floating seat "O" ring	
45	Hand hole cover (with window)	
46	Hand hole cover (without window)	
47	Hand hole cover gasket	
48	Hand hole cover screw	
49	Head cover (air cooled)	
50	Head cover (water cooled)	
51	Head cover gasket	
52	Head cover screw	
53	Head jacket cover	
55	Head jacket cover gasket	
54	Head jacket cover screw	
56	Oil pump assembly	
58	Oil pump "O" ring	
59	Oil pump gasket	
60	Oil pump hexagon head screw	
61	Cylinder sleeve	
62	Cam ring (leftward sloped)	
63	Cam ring (rightward sloped)	
65	Retaining ring	

Part Number	Part Name	Remarks
66	Cylinder sleeve gasket	
67	Cylinder sleeve "O" ring (for high stage in single two-stage compressor)	
68	Lift pin	
69	Lift pin spring	
70	Lift pin stop ring	
71	Suction valve	
72	Suction valve spring	
73	Valve plate	
74	Discharge valve cage guide	
75	Discharge valve cage guide hexagon head bolt	
76	Connecting rod assembly (for high stage in single two-stage compressor)	
77	Connecting rod assembly	
78	Connecting rod screw	
79	Connecting rod hexagon head bolt washer	
80	Connecting rod tightening nut (first)	
81	Connecting rod tightening nut (second)	
82	Connecting rod bushing	
83	Connecting rod needle bearing (for high stage in single two-stage compressor)	
84U	Bearing halves (top)	
84L	Bearing halves (bottom)	
85	Piston	
86	Piston pin	
87	Piston pin locking spring	
89	Piston ring 1st	
90	Piston ring 2nd	
100	Oil ring 3rd	
101	Oil ring 4th	Not used with three-ring specification.
109	Discharge valve cage	
110	Discharge valve	
111	Discharge valve seat	
112	Discharge valve hexagon head bolt	
113	Discharge valve tightening nut (first)	
114	Discharge valve tightening nut (second)	
116	Discharge valve spring	
117	Safety head spring	
119	Oil strainer	
121	Oil strainer cover	
122	Oil strainer cover gasket	
123	Oil strainer cover hexagon head bolt	
135	Unloader push rod	
142	Unloader device spring	
143	Pushrod washer	
144	Pushrod hexagon head bolt	
145	Unloader piston	
146	Unloader piston cover	
147	Unloader piston cover gasket	
149	Unloader piston cover hexagon head bolt	
150	Unloader piston cover hexagon socket head bolt	
150-1	Hexagon socket head bolt washer	
164	Oil sight glass	
165	Oil sight glass "O" ring	
166	Oil sight gland	
167	Oil sight gland hexagon head bolt	

Part Number	Part Name	Remarks
154	Suction strainer	
156	Suction filter metal mesh canvas	*1
158	Suction strainer holder spring	
159	Canvas holder snap ring	*1
161	Suction end cover	
162	Suction end cover gasket	
163	Suction end cover hexagon head bolt	
168	Discharge elbow	
169	Discharge elbow gasket	
170	Discharge elbow hexagon head bolt	
172	Discharge shut-off valve mating gasket	
173	Discharge shut-off valve	
173-1	Discharge shut-off valve companion flange	
173B	Discharge shut-off valve companion flange mounting bolt and nut	
174	Discharge shut-off valve mounting bolt and nut	
175	Scale trap	
176	Scale trap mating gasket	
177	Scale trap hexagon head bolt	
178	Scale Trap Screen	
178-1	Scale trap metal mesh canvas	
179	Scale trap cover	
180	Scale trap cover gasket	
181	Scale trap cover hexagon head bolt	
182	Suction shut-off valve	
182-1	Suction shut-off valve companion flange	
182B	Suction shut-off valve companion flange mounting bolt and nut	
183	Suction shut-off valve mounting bolt and nut	
184	Suction shut-off valve mating gasket	
185W	Water-cooled oil cooler assembly	
185R	Lubricating oils cooler assembly	
197	Thermometer set (discharge side)	
234	Head jacket cover water flange	
235	Head jacket cover water flange gasket	
236	Head jacket cover water flange hexagon head bolt	
205	Unloader solenoid valve	
JO4140	T-type half union (R3/8×Ø6×R3/8)	

*1 These parts are not assembled if the scale trap (175) is mounted.

2.2.3 Modified Parts

2.2.3.1 Modified Parts

This is the list of parts modified from WB series of the compressor (modified parts).

Table 2-8 Modified Parts List

No.*1	Part Name	Qty.	Compatibility *2	Remarks
1	Crankcase	1	No	
2	Crankshaft	1	Yes	Eight-cylinder has two types of material.
8	Main bearing head	1	No	
9	Main bearing head gasket	1	No	
10	Main bearing head hexagon head bolt (short)	14	No	M16×L55
11	Main bearing head hexagon head bolt (long)	2	No	M16×L110
12	Main bearing	1	No	
26	Cover plate	1	No	
27-1	Seal box "O" ring	1	No	JIS 2401 G230
28	Cover plate hexagon head bolt	12	No	M16×L55
29	Thrust bearing	1	No	
29-1	Thrust bearing-BB	1	No	For thrust roller bearing
32	Shaft seal	1	No	
142	Unloader device spring	—	Yes	The quantity differs depending on the model.
89	Piston ring 1st	—	No	WBHE three-ring specification
90	Piston ring 2nd	—	No	WBHE three-ring specification
100	Oil ring 3rd	—	No	WBHE three-ring specification
85	Piston	—	No	WBHE three-ring specification
73	Valve plate	—	Yes	WBHE
109	Discharge valve cage	—	Yes	WBHE

※ 1: For No. refer to "2.2.2 Development View and Parts List".

※ 2: "Yes" for compatibility indicates that the parts modified for this compressor can be used in the conventional compressor, WB series. Even if the compatibility is "Yes", parts from WB series cannot be used in the WBHE compressor.

2.2.3.2 Deleted Parts

This is the list of WB series parts that are not used in the WBHE compressor (deleted parts).

Table 2-9 Deleted Parts List

Part Name	Qty.	Remarks
Bearing head	1	
Bearing head gasket	1	
Bearing head hexagon head screw	4	M16×L40 (Hexagon socket head bolt)
Lock nut	2	M95×P1.5
Oil ring 4th	—	Not used with WBHE three-ring specification.

2.2.4 Cross-Sectional View of Assembly

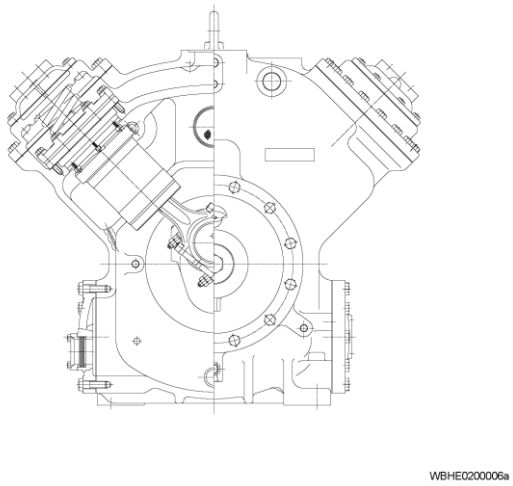

Fig. 2-18 4WBHE Front View

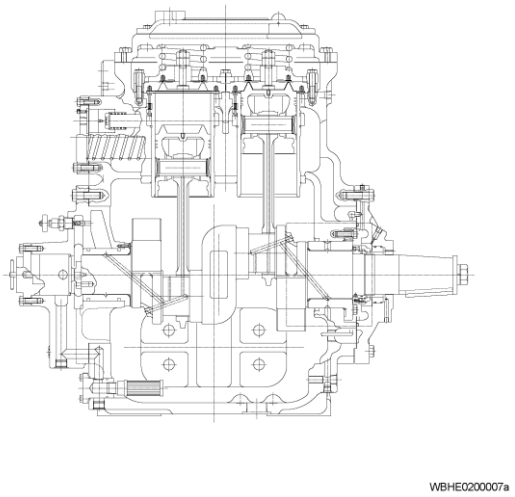

Fig. 2-19 4WBHE Side View

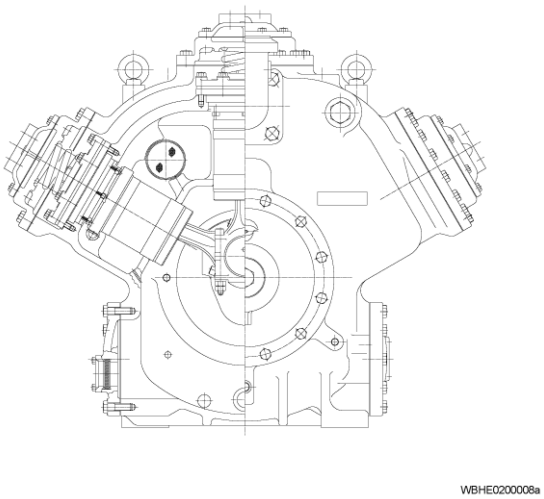

Fig. 2-20 6WBHE Front View

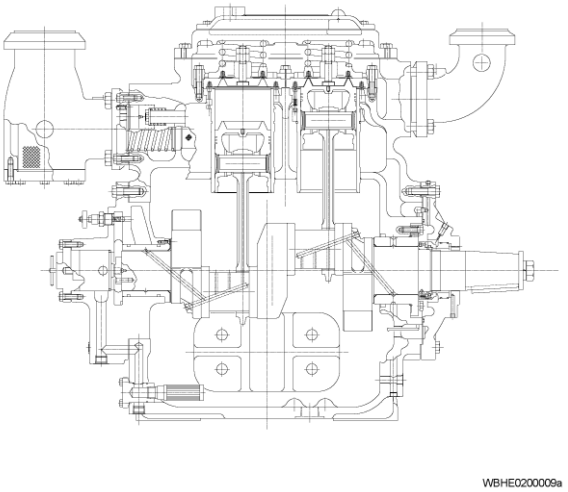

Fig. 2-21 6WBHE Side View

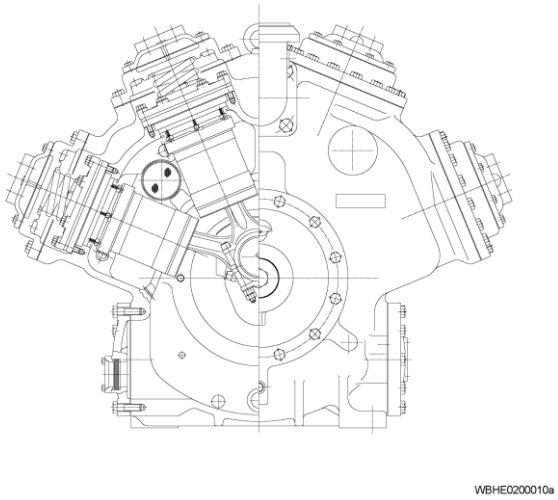

Fig. 2-22 8WBHE Front View

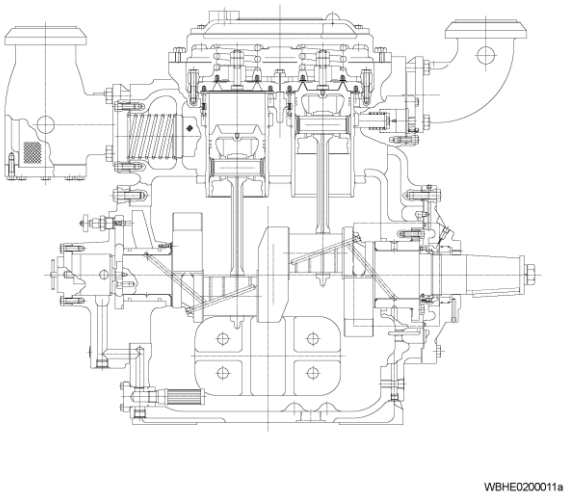

Fig. 2-23 8WBHE Side View

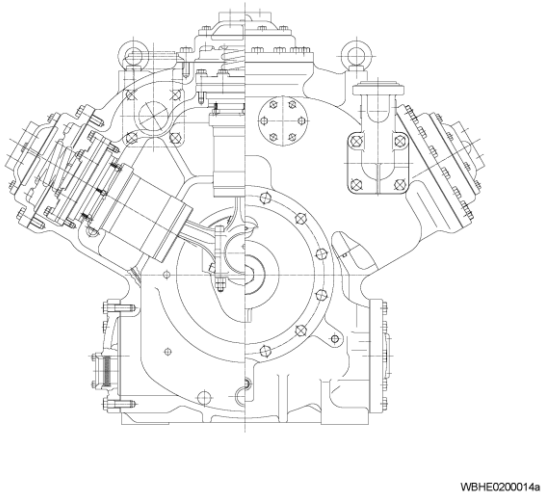

Fig. 2-24 42WBHE Front View

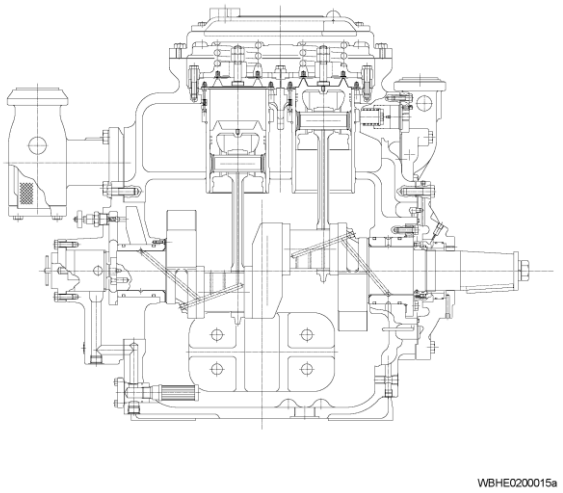

Fig. 2-25 42WBHE Side View

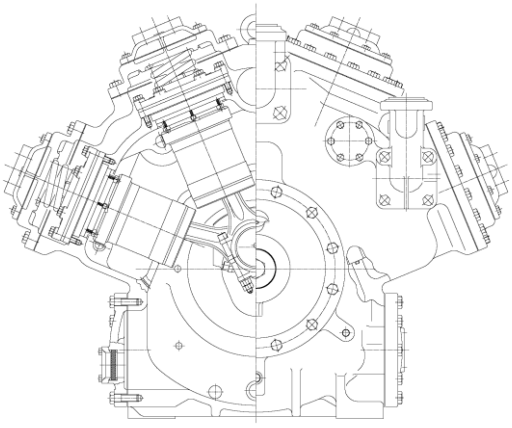

WBHE0200012a

Fig. 2-26 62WBHE Front View

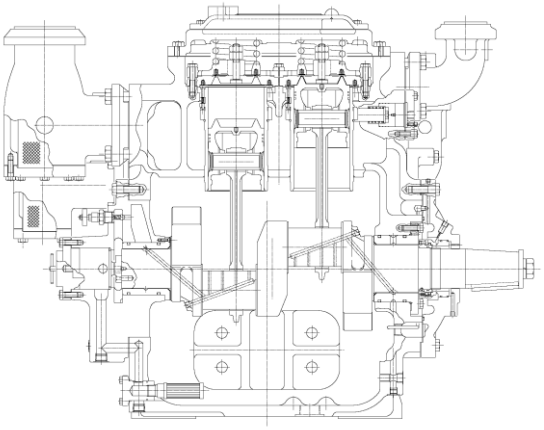

WBHE0200013a

Fig. 2-27 62WBHE Side View

2.2.5 Oil Supply Mechanism

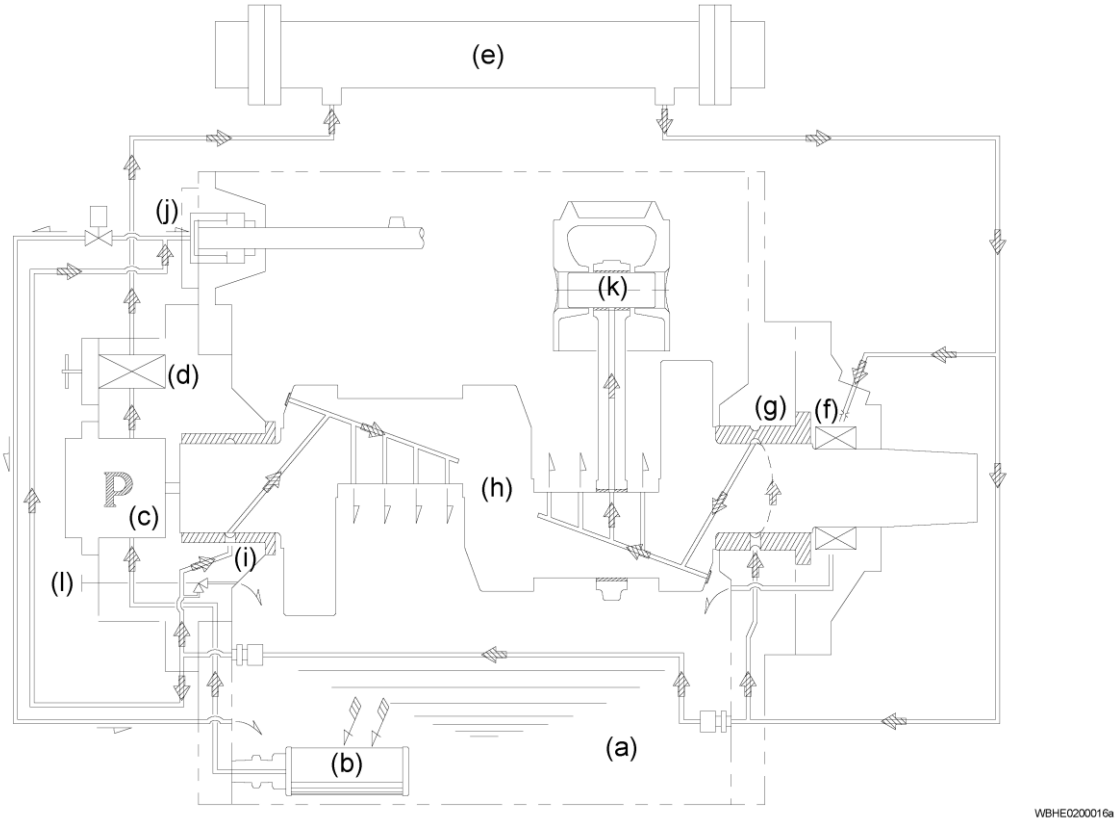

Fig. 2-28 Oil Supply Mechanism

1. The oil is retained as required in the oil pan (a) at the bottom of crankcase.
2. When the oil pump (c) driven by the crankshaft (h), oil in the pan (a) is suctioned via the oil strainer (b).
3. The oil is pressurized and drained by the oil pump (c), and passes the oil filter (c).
4. The oil filtered by the CUNO filter (d) is discharged from the crankcase to the outside of the compressor and passes through the oil cooler (e).
5. The oil is cooled by the oil cooler (e), and divided into the cover plate and crankcase.
6. The oil enters from the cover plate into the shaft seal (f). The oil which lubricates the shaft seal (f) returns to the oil pan.
7. The oil enters into the crankcase and is divided. One stream passes through the thrust bearing (g) on the seal side to the oil supply opening on the crankshaft (h). The other stream passes through the main bearing (i), and is divided into the oil supply opening on the crankshaft (h) and capacity control mechanism (unloader) (j).
   1) The oil which passes through the crankshaft (h) lubricates the crank pin, and passes the oil supply line in the connecting rod. Then it lubricates and cools the cylinder (inner wall of the cylinder, piston ring, piston pin (k) and bearing on the connecting rod small end).
   2) When the solenoid valve is not energized (OFF), the oil is sent into the capacity control mechanism (unloader) (j) it enters the unloader cylinder and presses the unloader piston, then the unloader mechanism becomes loaded. When the solenoid valve is energized (ON), the oil discharge route opens and the oil in the unloader cylinder is discharged. The pressure which has pressed the unloader piston decreases, and the piston is pressed back by the force of the unloader device spring. Then, the piston becomes unloaded.
   3) The oil pressure regulating valve (l) bypasses part of the oil via the oil pan so that the difference between pressure in the oil pan (suction pressure) and oil supply pressure is maintained at a constant value.

2.2.6 Unloader Mechanism

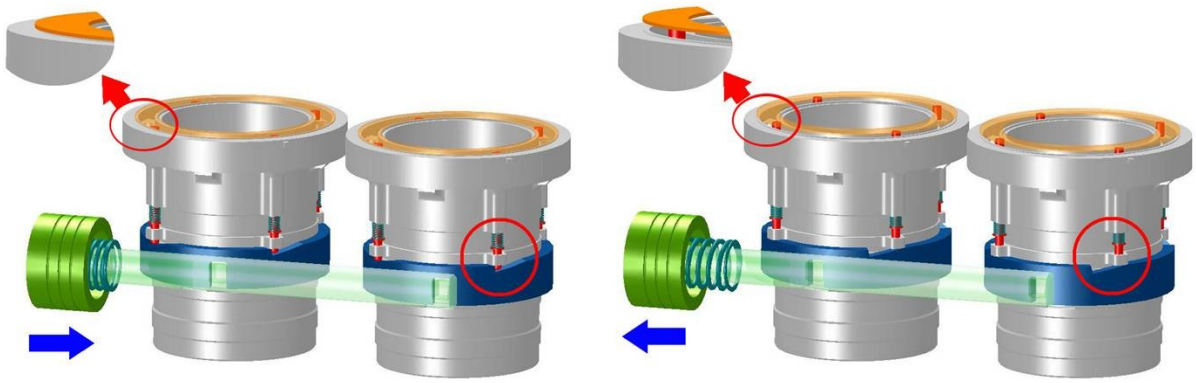

Fig. 2-29 Unloader Mechanism

The capacity control (unloader) mechanism controls the operation of suction valve using an unloader piston. By controlling the operation of suction valve, it changes the number of cylinders which compress gas to change the suction capacity (performance).

The details of mechanism are as below.

- Suction valves located on the top of cylinder sleeve allow gas to enter through a process of lifting and seating due to pressure differential. Gas enters into the cylinder from the passage between the external cylinder wall and internal cavity. The lift pin is located on the outside of the cylinder wall. Used in conjunction with a cam ring, it forces the compressor to load or unload by the lifting or lowering of suction valve with the rotation of the cam ring. The bottom of lift pin is on the inclined surface of cam ring. This cylinder cam ring is rotated by the rod which is moved by the unloader piston. This rotation moves the lift pin upward and downward.
- If the lift pin is moved downward to below the suction valves seated surface, the suction valve (suction valve) will operate depending on pressure difference. However, when the pin is pushed up and lifts the suction valve by the rotation of cam ring, the suction valve will not close even if pressure difference is generated. In this state, even though the piston moves upward and downward in the cylinder, the gas only passes in and out from the suction opening. Due to this, the pressure does not increase and the gas is not discharged. This is known as an unloaded state. As described above, this mechanism controls the capacity by changing the number of cylinder which compresses gas.
- The cam ring is moved by oil pressure and the spring. If the unloader piston is not pressurized by oil, it becomes unloaded by the force of spring. Therefore, the capacity can be controlled by cutting off the oil pressure during compressor operation. This is performed by energizing (turning ON) the solenoid valve.
- For a good balance between drained and supplied oil, the piping fitting on the oil supply side of unloader (with main bearing head assembled) is narrowed to φ1, and the fitting on the outlet side of solenoid valve main unit is narrowed to between φ5 and 5.5.

2.3 V-Belt and Direct Coupling

■ Flywheel Specification List

Model	Other than Europe and Australia	Europe and Australia
4WBHE	460ΦC-8	460ΦSPC-8
6WBHE	460ΦC-10	460ΦSPC-8
8WBHE	460ΦC-12	460ΦSPC-8
42WBHE	460ΦC-8	460ΦSPC-8
62WBHE	460ΦC-10	460ΦSPC-8

■ Direct Coupling (Selected)

The model of coupling to be used differs depending on the motor capacity.

Motor Capacity	Coupling Model
75 kW or less	BX600 Assy
90 kW or over	GB03 Assy

This product is equipped with a flywheel function.

3 Installation

3.1 Safety Precautions for Installation

【POINT】

- This chapter is based on the assumption that the compressor is installed for the purpose of refrigeration, cold storage, and air conditioning systems, recreational systems.
  If the specifications differ for your systems, refer to this chapter and consider safety, before operation.
  If there are any questions, please contact your local sales offices or service centers.

- Insure that installation work is performed by a qualified personnel or contracting company. Make sure that the work is performed in compliance with local laws and ordinances.
- Read this chapter and related documents, and fully understand their contents before performing installation.
- Electrical works should be performed only by those certified by local governing body.
- Do not place any part of your body under the lifted compressor.

3.2 Installation Works

3.2.1 Unpacking

Check that there is no abnormalityY such as damage to the compressor.

【POINT】

- If there are abnormalities or deficient parts on the compressor, please contact your local sales offices or service centers immediately.
- Unnecessary packing materials should be discarded according to the laws and ordinances, or your company's rules.

3.2.2 Storage

Perform the following to store the compressor before installation.

- Store it indoors.
- Charge with nitrogen gas and seal it.

【POINT】

- Nitrogen gas has been charged into the compressor at shipping to prevent from rusting.

3.2.3 Transfer

⚠ DANGER

- **Dropping of a lifted compressor may cause death or serious injury. Do not move near a lifted compressor.**

1. For lifting the compressor within the safety limit, use lifting equipment and tools appropriate for the weight of compressor.
2. Leave sufficient space for lifting.
3. Always check wire rope before using. Thoroughly check for kink, knot, or breakage. Do not perform lifting before checking the wire rope. If there are any problems or questions, undergo an inspection by an expert.
4. For lifting the compressor individually, hook the wire rope on the lifting bolt of compressor.
5. For lifting the compressor with base and motor, hook the wire rope on the lifting bolt and the base of compressor. Do not use the lifting bolt on the motor.
6. Check path of compressor installation to make sure it is free of obstacles.
7. Check that the hook is above the center of gravity of the unit before lifting.
8. Direct all the workers to stay clear of the work site before lifting.
9. Before lifting compressor notify all workers in area of dangers during lifting process. Remove all nonessential personal from area till lift is complete. Do not perform lifting unless those signals (such as calling the name and gesturing by hand) are completely recognized.
10. Wind up the wire rope slowly until shortly before the compressor leaves from the ground.
11. Remove all tension slowly until the compressor leaves the ground, and check that the compressor is balanced. If it is tilted, lower compressor and correct the tilt. Then, wind up the wire rope again.
12. Lift the compressor slowly. If it is lifted rapidly, it may damage the lifting tools such as wire rope or a part of the compressor.
13. When the lifting is started, check that the wire rope and other lifting tools are normal by observation. Check that the compressor is not tilted.
14. When moving the lifted compressor, always use tag line/induction rope.

15. Have other people stay clear of the movement direction and check the safety before moving the compressor.

16. Do not lift the compressor over head of the safety aisle unless absolutely necessary.

17. Do not lower the compressor and block the safety aisle. Always clear the safety aisle to be passable.

18. Remove obstructions before lowering the compressor onto the ground. The compressor should not be tilted or unstable.

19. Before lowering the compressor, notify others.

20. When lowering the compressor onto two or more blocks, align the tops of blocks so that the compressor becomes stable horizontally to them.

21. Lower the lifted compressor slowly so that it is not damaged by impacting the ground.

3.2.4 Preparation for Installation

■ Installation Space

The figures below show the minimum necessary space for disassembly and reassembly of the compressor. Refer to these figures and secure space which allows easy operation, cleaning, maintenance, and inspection.

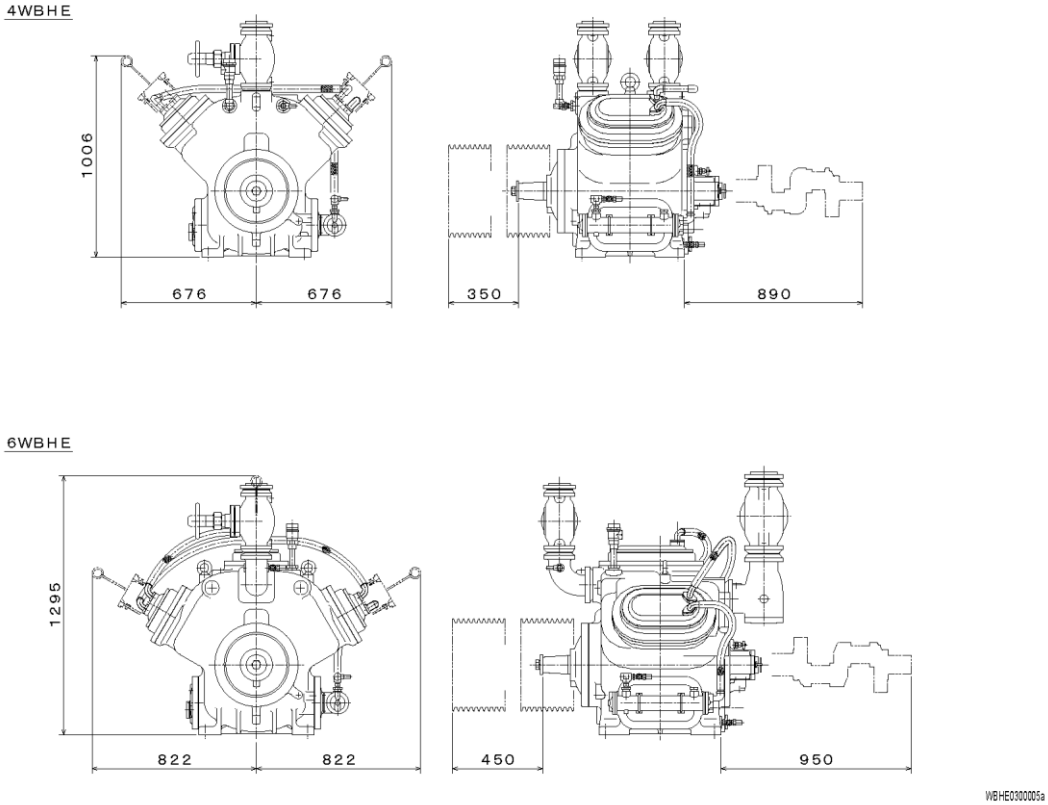

【POINT】

- Installation space for 6WBHEU will be the same as 6WBHE. However, the connecting position of the suction pipe differs.

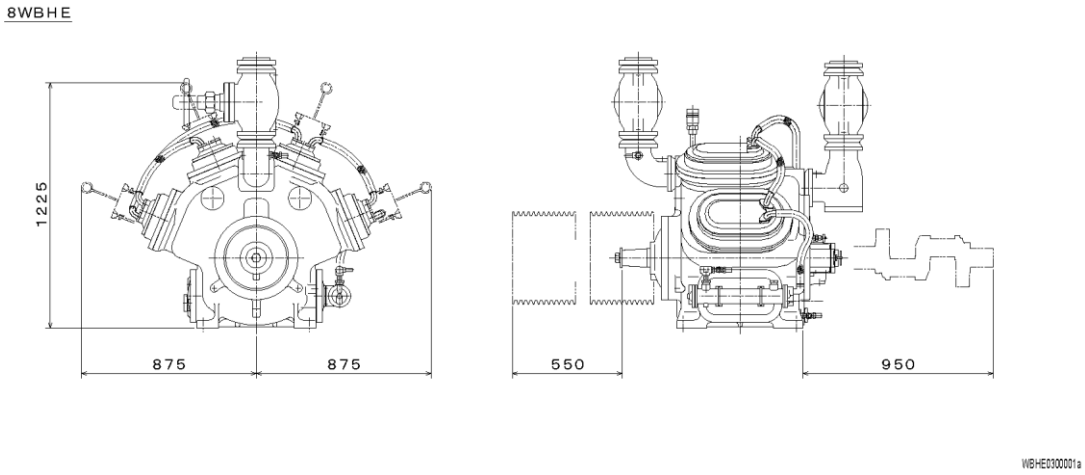

【POINT】

- Installation space for 8WBHEH, 8WBHEU, and 8WBHEHU will be the same as 8WBHE.

Fig. 3-1 Installation Space

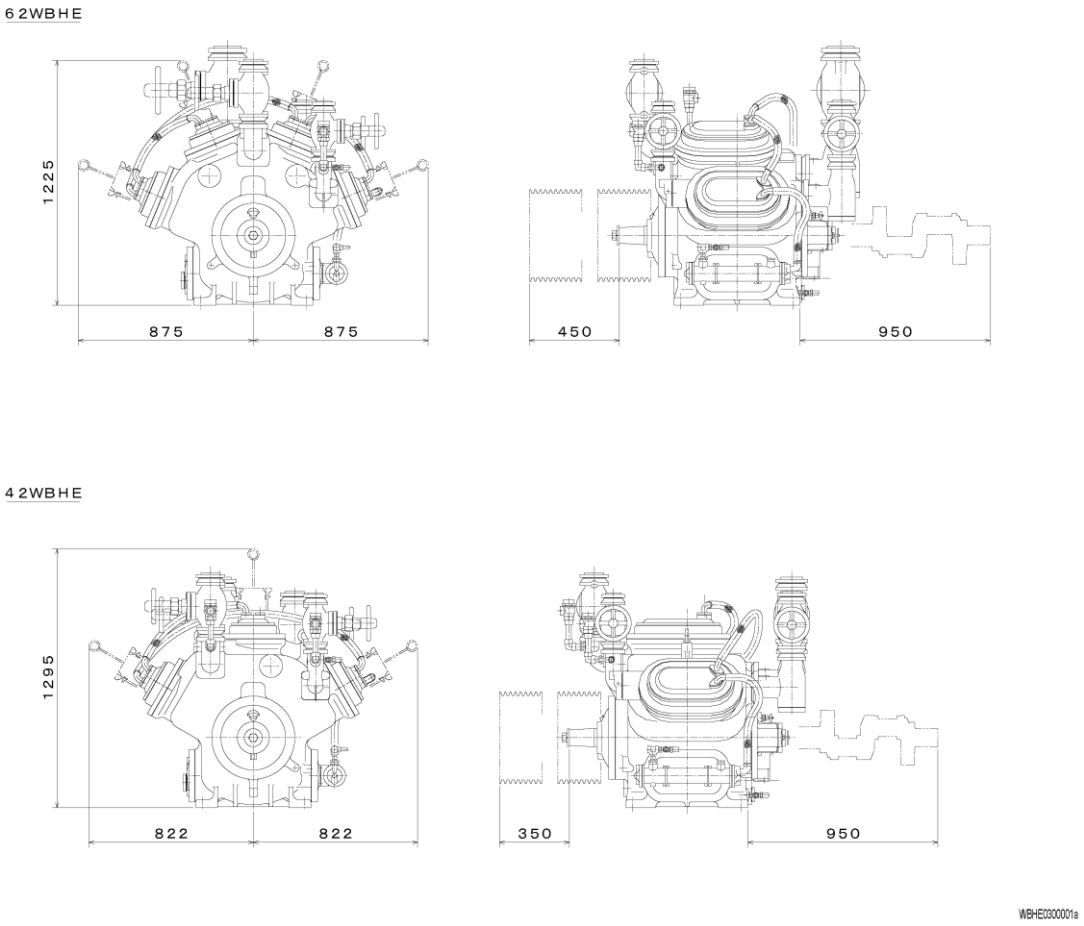

Fig. 3-2 Installation Space

■ Illumination

Prepare illumination devices which will help with easy operation, cleaning, maintenance, and inspection.

■ Ventilation

If natural ventilation is insufficient, install ventilation fans according to the regulations.

■ Cooling Water

Referring to chapter 7, secure cooling water necessary for your system.

■ Noise and Vibrations

Perform appropriate measures.

■ Piping

Table 3-1 Connected Piping List

		4WBHE	6WBHE	8WBHE	42WBH		62WBHE	
					Low Stage	High Stage	Low Stage	High Stage
Suction gas	With suction valve	MYCOM 80A	MYCOM 100A	MYCOM 100A	MYCOM 80A	MYCOM 65A	MYCOM 100A	MYCOM 65A
	Without suction valve 1)	MYCOM 80A	MYCOM 100A	MYCOM 100A	MYCOM 80A	MYCOM 65A	MYCOM 100A	MYCOM 65A
Discharge gas	With discharge valve	MYCOM 80A	MYCOM 80A	MYCOM 100A	MYCOM 65A	MYCOM 50A	MYCOM 65A	MYCOM 50A
	Without discharge valve 2)	MYCOM 80A	MYCOM 80A	MYCOM 100A	MYCOM 65A	MYCOM 50A	MYCOM 65A	MYCOM 50A
High pressure gauge connection port		3/8"×φ6						
Low pressure gauge connection port		3/8"×φ6						
Oil pressure gauge connection port		1/4"×φ6						
Cooling water inlet		3/4"						
Cooling water outlet		3/4"						
Oil separator return inlet (float type)		3/8"						
Oil separator return inlet (not float type)		3/4" (without suction valve: 3/8")						
Safety valve connection port		The connection port differs depends on the specification.						

1) Discharge elbow is equipped (discharge elbow is not equipped on 4WBHE.)
2) Scale strap is equipped (scale strap is not equipped on 4WBHE.)

3.2.5 Installation

3.2.5.1 Installation

Check that mounting surfaces of the refrigerating, cold storage, and coolant systems to compressor are horizontal. If not, the compressor may be deformed by tightening bolts, and fail to operate normally.

3.2.5.2 Position of the Oil Returning Point from the Oil Separator / Procedure of Oil Returning

A Float valve is recommended when returning oil from the oil separator and the system. When returning oil from the system, heat the oil so that the refrigerant does not return to the compressor.

3.2.5.3 Protection Switch

To protect the compressor and prevent accidents, install the protection equipment below.

For details, refer to "1.4.5 Automatic Control and Protection Equipment of WBHE Compressor".

- Oil pressure protection equipment (OP)
- High pressure protection equipment (HP)
- Low pressure control equipment (LP)

3.2.5.4 Centering of the Compressor/Driving Machine and Attachment of the V-belt

Specification of the Belt: V-belt (Standard & Red), Type of the Belt: C

CAUTION

- **To replace the V-belts with a new one, purchase the same set of belts, and replace the whole set at once.**
  Even if their nominal dimensions are the same, their actual lengths may slightly differ. In such case, operation force is applied only to the short belt. This may cause wear of the belt and abnormal vibration.
  Also, if old and new belts are used together, the difference of their wear amounts may cause abnormal vibration.
- **V-belt should be free from compressor oil and lubrication oil. If those oils adhere to V-belt, wipe them off.**

【POINT】

- The V-belt in belt unit is adjusted to the initial appropriate tension load before shipment. However, the tension load may decrease due to shipment. Check and adjust the tension load before operation of the compressor.

■ Centering and Attachment of V-belt

If the compressor has a common base, centering is performed on the V-belt before shipment. However, check the center again after installation.

1. Run a string on the side of pulley to check that the compressor and the motor are center and parallel.
If the center is not in the correct position, it accelerates the wearing of the belt due to high-speed rotation, and shortens the life span of the compressor and motor by applying unnecessary force to the bearings.

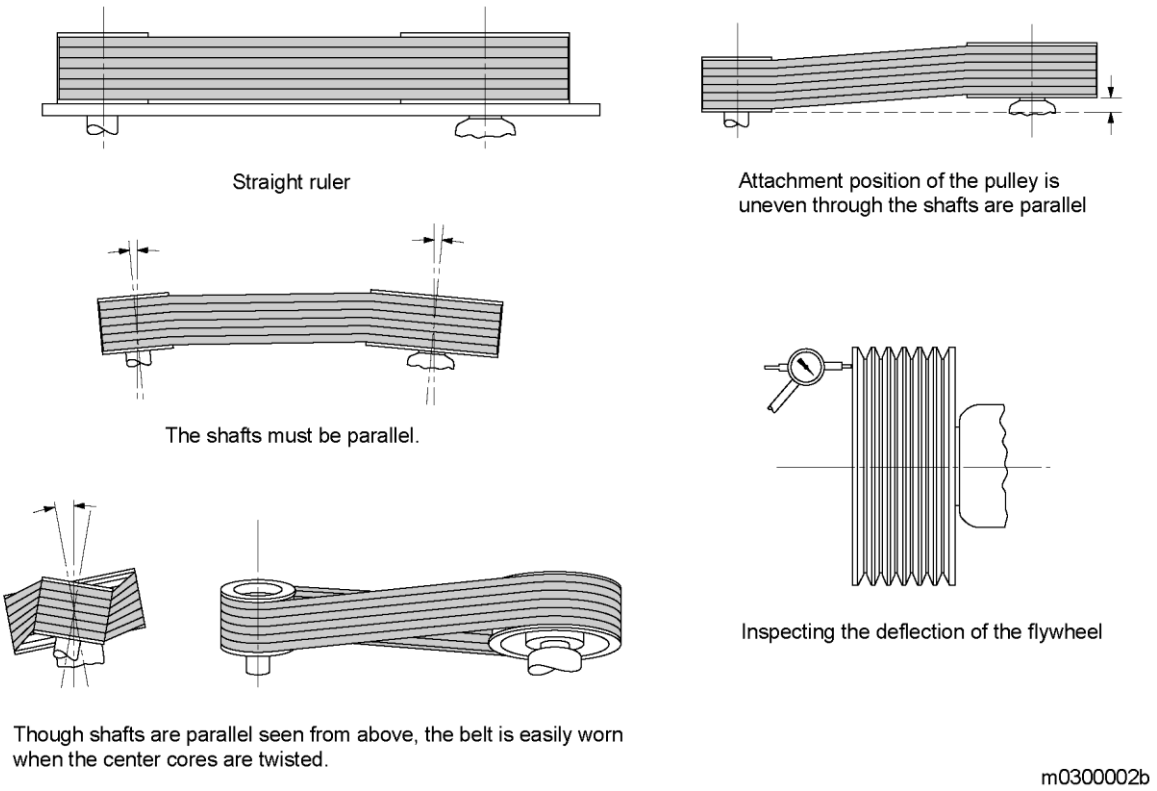

Fig. 3-3 Centering of V-belt

For centering by driving the belt, run a string on the side of flywheel and motor pulley.

Centering standard: L=1 mm or less

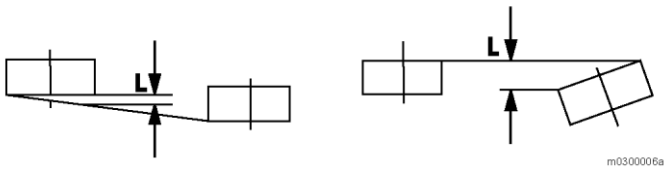

Fig. 3-4 Centering Standard

2. Loosen the slide base of motor, move the compressor and the pulley closer to each other, and attach the V-belt to groove V while slacking the V-belt.
Check that the V-belt fits groove V, and pull the motor with the bolt so that the belt becomes tensioned.

Deflection = 0.016 × Span length (mm) (Span length ≈ Center distance)

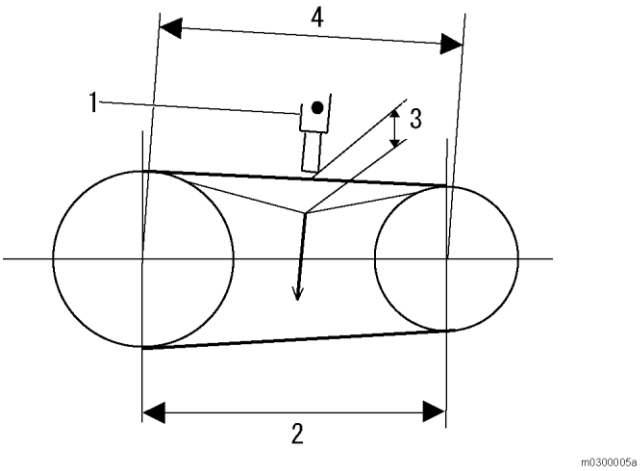

Fig. 3-5 Deflection

No.	Description
1	Tension meter
2	Center distance

No.	Description
3	Deflection
4	Span length

Table 3-2 Simplified Table of Deflection Amount (mm)

Center Distance (mm)	1000	1100	1200	1300	1400	1500
Deflection (mm)	16	18	19	21	22	24

Table 3-3 Simplified Table of Tension Load (kgf/belt)

Tension Load of New Belt	Tension Load at Re-Straining	Minimum Tension Load
4.0 - 4.5	3.0 - 3.5	2.5 or more

Note 1: Re-tighten the belt for the first time after 4—8 hours from the starting the operation.

Note 2: Rotate the flywheel (pulley) to check the tension load of V-belt.

Note 3: When the belt is under the minimum tension load, make sure that the belt does not move excessively by operation, because the load fluctuates due to the load conditions.

Note 4: The tension load after one-year operation should be 2.5 or more (kgf/belt).

【POINT】

- During the first operation of compressor for 4 to 8 hours after replacing the V-belt, initial extension and friction will occur to the new V-belt. Due to these and other causes such as peel-off of coating from flywheel, the tension load of V-belt decreases drastically to less than the minimum. If the V-belt is continuously used in this condition, the service life of V-belt is shortened by slipping. In addition to this, defects may occur such as excessive movement of V-belt, overturn and deviation caused by wear of belt on one side. Make sure to re-tighten the V-belt soon after operation.
- If the belt tension is insufficient, its service life is shortened.
  If the belt is replaced with a new one, operate the compressor with the new belt for 24—48 hours and check the tension again.

■ Centering and Attachment of Couplings

The installation positions of compressor and motor are designated according to the center distance appropriate for attachment of couplings. Also, the difference of center core heights must be within 0.1 mm.

Align the center cores by correcting the parallelism and deviation between left and right shafts.

1. Keep the compressor on the frame, and attach the coupling hub on the compressor side to the crankshaft.

2. Set the dial indicator on the motor axle using a magnetic stand or others, so that the probe contacts the external diameter and surface of the coupling hub on the compressor side. (A)

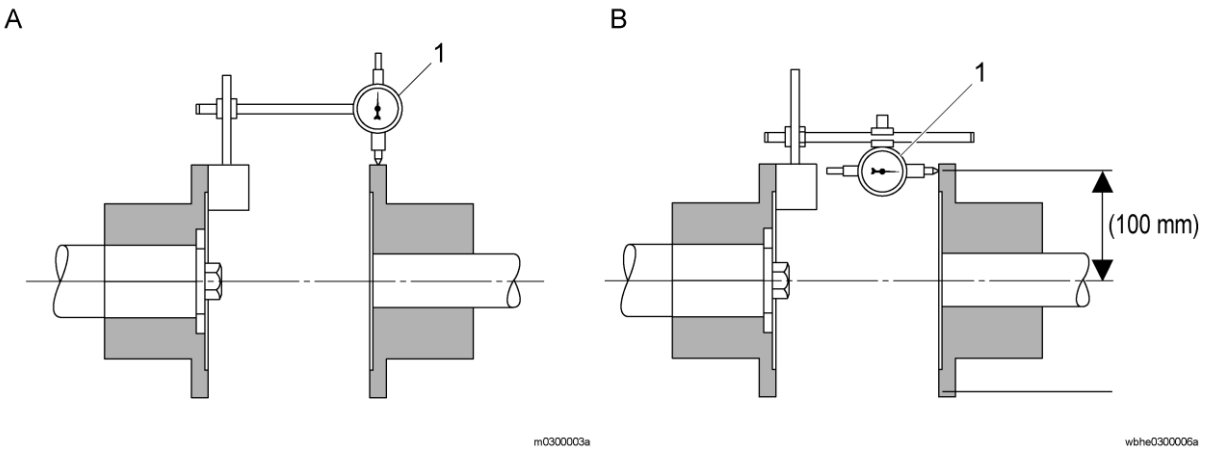

Fig. 3-6 Measurement of Axle Core

Symbol	Description
A	Measurement of core deviation
B	Measurement of angle deviation

No.	Description
1	Dial indicator

3. Read the scale of dial while rotating the motor axle. Then operate the motor so that the core runout of outer periphery (core deviation) is 0.05 mm or less (relative deviation 0.1 mm or less), and the deflection of hub face (angle deviation) is 0.05 mm or less per radius 100 mm.

4. When the alignment is within the specified measurements, tighten the motor on the frame.

5. Attach the coupling hub on the motor side to the axle.
Do not tighten it at this point.

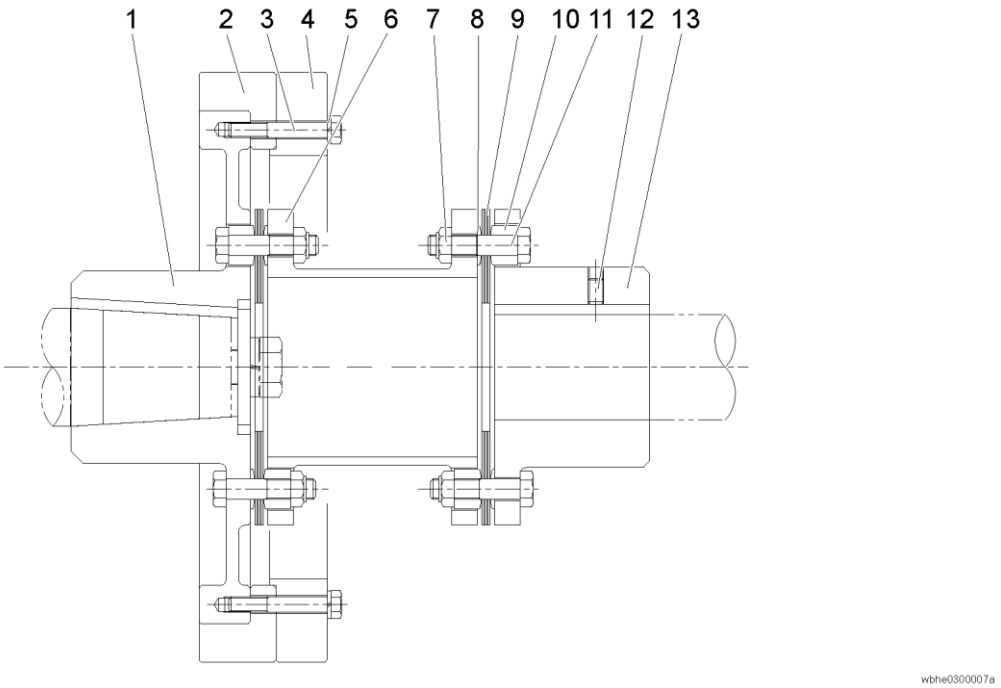

Fig. 3-7 Coupling

No.	Description
1	Flywheel
2	Sub ring
3	Sub ring fixing bolt
4	Ring (II) [1)]
5	Spring washer
6	Spacer
7	Nut

No.	Description
8	Over load washer (II)
9	Element
10	Over load washer (I)
11	Bolt
12	Key set screw (Hexagon socket set screw)
13	Hub

1) Equipped when the motor is 90 kW or more (GB03 Assembly).

6. Attach the coupling/insert to the coupling hub on the compressor side.
Insert bolts from the back of hub (on the compressor side), then attach washers, coupling/insert, washers, and nuts in the described order.
The washers are processed to be curved on one side. This side should face to the coupling/insert.

7. Attach the spacers to the coupling/insert attached in step 6.
The large hole on the hub face of spacer is back clearance for the tightening nuts of coupling/insert on the compressor side.

8. Keep the coupling/insert on the motor side on the spacer.

9. When attaching the hub and coupling/insert on the motor side, move the hub to the gap in which the washers fit, and adjust the interval between the coupling hubs.
If the washers do not fit in easily, or there are gaps between the coupling/insert, washers, and hub face, force in the axle direction (thrust) is applied. Prevent this thrust from applying.

10. Tighten the hub on the motor side on the axle.

11. Tighten all the nuts at the specified torque again.

3.2.5.5 Piping

Vibration generated from the compressor is transmitted to the building via two systems: substruction and piping. Take into consideration the piping support to prevent resonance within the building.

■ Refrigerant Piping

Observe the followings when connecting the refrigerant piping.

- Compressor is one of the few components with moving parts in the refrigerating, cold storage, and air conditioning systems. The moving parts should be free from debris. During piping work, do not put tools such as scale into it.
- The compressor may contain nitrogen gas charged before shipment to prevent from rusting. Do not open the suction and discharge valves unless it is required.
- The piping must be free from moisture. It may cause troubles after starting operation. Assemble the piping in dry conditions.
- If the suction piping is assembled inappropriately, it may cause oil troubles in the piping not returning to the compressor, and liquid compression.
- When connecting the piping to the compressor, select a pipe whose size is the same as the connection of compressor. If the pipe size is smaller than the connection of compressor, it may restrict the oil or refrigerant flow, resulting in trouble.
- Make sure to attach supports to the piping so that excessive force is not applied to the compressor. Also, when a vibration-proof base is used, install flexible tubes on the piping.

■ Cooling Water Piping

CAUTION

- **Do not divide the cooling water system from the oil cooler to the head jacket. This is dangerous because the difference of pressure loss (resistance) restricts the cooling water flow, resulting in failure to cool necessary sections.**
- **The oil on the discharge side can be deteriorative due to overheating in the compressor. Always flow cooling water during operation of compressor.**

The cooling water piping differs depending on the oil cooler specifications; water cooled type oil cooler or direct expansive oil cooler.

- Water cooled type oil cooler: cooling water that ran through the oil cooler is supplied to the head jacket.
- Direct expansion type oil cooler: cooling water is supplied directly to the head jacket.

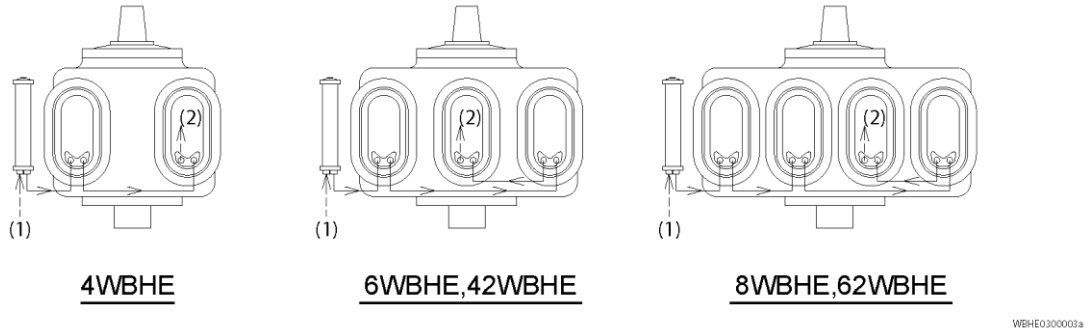

Fig. 3-8 WBHE Series Cooling Water Schematic Diagram for Water Cooled Type Oil Cooler

No.	Description
(1)	Cooling water inlet (water cooled type oil cooler)

No.	Description
(2)	Cooling water outlet (jacket head cover)

【POINT】

- Cooling water piping for 6WBHEU will be the same as 6WBHE.
- Cooling water piping for 8WBHEH, 8WBHEU, 8WBHEHU will be the same as 8WBHE.

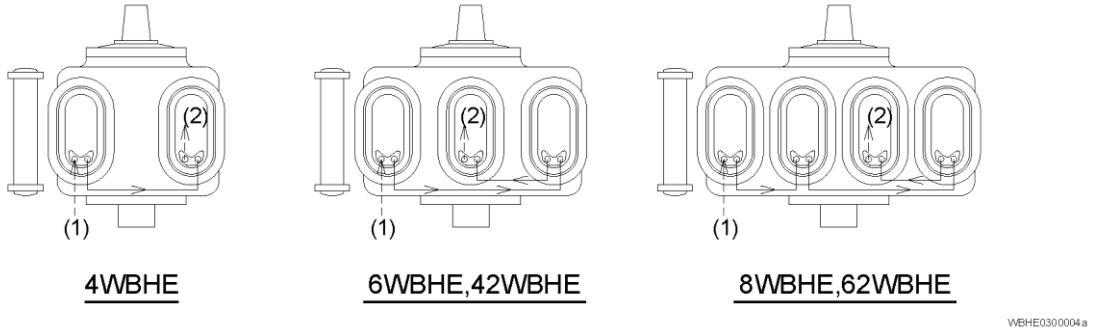

Fig. 3-9 WBHE Series Cooling Water Schematic Diagram for Direct Expansion Type Oil Cooler

No.	Description
(1)	Cooling water inlet (jacket head cover)

No.	Description
(2)	Cooling water outlet (jacket head cover)

【POINT】

- Cooling water piping for 6WBHEU will be the same as 6WBHE.
- Cooling water piping for 8WBHEH, 8WBHEU, 8WBHEHU will be the same as 8WBHE.

Table 3-4 Cooling Water Piping (Withstand Pressure Braided Hose) Specification

Item	Specification
Cooling water inlet size	Rc3/4
Cooling water outlet size	Rc3/4
Maximum cooling water pressure	0.5 MPaG or lower
Maximum cooling water temperature	50°C or below

3.2.5.6 Changing Rotational Direction of Compressor

Rotational direction of the compressor can be changed. However, in that case, rotational direction of the oil pump must also be changed. For details on changing the rotational direction, refer to "5.6.2.4 Drag Crank and Oil Pump".

CAUTION

- **If you want to change rotational direction after starting operation with another rotational direction, change the direction after performing maintenance work of the compressor.**

3.2.5.7 Charging of Lubricating Oils

Refer to "4.1.2 Initial Oil Supplying Method".

3.2.6 Check after Installation

Referring to the items described below which should be performed after installation of compressor, formulate a list and procedure to check the refrigerating, cold storage, and air conditioning systems you use, based on their specification.

■ Automatic Control, Connections

- Wiring between the control board and each switch
- Activation mode (auto/semi-auto) and rotational direction of motor
- Insulating resistance of motor

■ Operation Test of Protection Equipment

For details, refer to "1.4.5 Automatic Control and Protection Equipment of WBHE Compressor".

⚠ WARNING

- **If operation test of abnormal high pressure protection equipment (HP) is performed at the setting value, it may cause bursting of devices. Make sure to perform the test at the normal operation pressure or below.**

- Oil pressure protection equipment (OP)
- High pressure protection equipment (HP)
- Low pressure control equipment (LP) and unloader solenoid valve

■ Air Tightness Test, Refrigerant Leakage Test

Perform air tightness test and refrigerant leakage test on your systems.

4 Operation of the Compressor

4.1 Lubricating Oils

The lubricating oils are used for lubricating the moving parts of the compressor, preventing abnormal wear, and cooling each section.

The following oil properties are required:

- There should be an appropriate viscosity under temperature and pressure conditions within the range of use.
- The oil should always flow even under the low temperature conditions (within the range of operating temperature for the refrigerant system).
- The oil should be chemically–stable so that it does not corrode or destroy the components (such as metals or rubbers).
- Wax should not be separated from the oil even under low temperature.
- Sludge and carbon should not be generated easily even under high temperature.
- Water should not be found in the oil.

4.1.1 Precautions for Selecting the Lubricating Oils

- Brands to be used for base oil differ depending on the types of refrigerant. For details, contact our sales office or Mayekawa representative.
- Do not use the Poly-O-Ester (POE) oil when NH_3 is used for refrigerant.
- Lubricating oils of ISO–VG46—68 is recommended.
- If the lubricating oils (compatible oil), to which a large amount of refrigerant is mixed, the viscosity may deteriorate significantly so that it is below the product specification under certain conditions. Select the oil so that the viscosity is 20—70 mm^2/s under usage condition.
- The circulation of the oils for the overall equipment must be taken into consideration. After the lubricating oil lubricates/cools each section of the compressor, it returns to the oil pan of the crankcase. However, some of the oil is discharged together with the refrigerant. Most of the oil discharged from the compressor is captured by the oil separator while some of it flows to the condenser or evaporator. As described above, there should be sufficient flow and stability inside each device with the different temperature zones.
-

■ **To change the brand of the lubricating oils:**

- Changing the existing lubricating oils with other brands may cause an unexpected problem due to mixing of new and old oils. Take sufficient care when changing the oil.
- If the manufacturers are different, contact both of them to confirm whether changing the oil is going to cause problems. The same confirmation is required for changing the brand even if it is of the same manufacturer.
- There is no problem in changing the viscosity level within the same brand. However, the viscosity level (after change) should be appropriate for operation.
  [Example] SUNISO 3GS -> SUNISO 4GS

4.1.2 Initial Oil Charging Method

When supplying oil initially or changing the oil after overhaul, supply the oil from the initial supply port to fill the oil cooler, oil filter and oil passages with oil. Supply the oil by vacuuming the compressor or pressurizing with the oil supply pump.

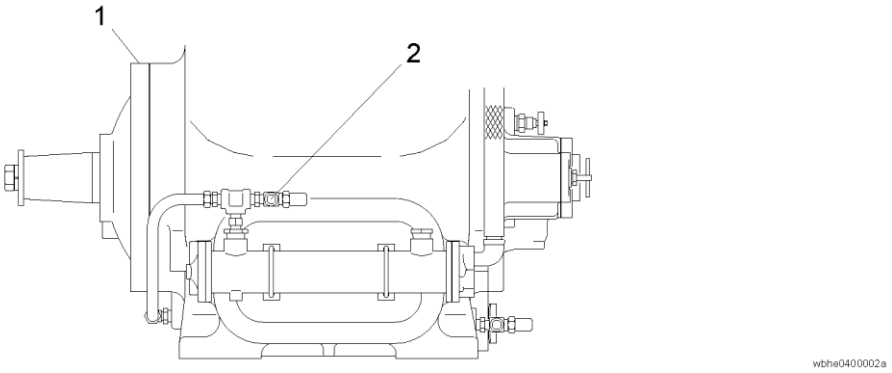

No.	Description
1	Oil supplying port on the cover plate (for replenishment)
2	Initial oil supplying port

4.1.3 Replenishment of the Lubricating Oils

The refrigerant oil level lowers gradually during the operation. While the oil level can be checked through the oil sight glass, replenish the oil in the following manner.

CAUTION

- **When replenishing the oil, be careful that the oil will not be contaminated by air or water.**
- **When replenishing the lubricating oils, use clean new oil.**
- **To prevent bubbling in the crankcase, supply the oil gradually.**
- **To avoid absorption of water vapor in the air, store the oil sealed until it is needed**

<Replenishment Method during Operation (Example)>

1. Close the compressor suction shut–off valve gradually until suction pressure becomes slightly vacuum (approx. –0.026 MPaG (–20 cmHg)).
2. The oil will be vacuumed gradually from the oil supply/drain valve (oil drain valve) on the compressor.
3. After the specified amount of oil is replenished, close the oil supply/drain valve completely.
4. Open the suction shut–off valve gradually, and change the equipment to the steady operation.

4.1.4 Set Oil Pressure

Adjust the oil pressure to 0.12—0.20 MPa above suction pressure (maximum of 0.4 MPa) using the oil pressure regulating valve.

4.1.5 Oil Quantity

Quantity of lubricating oils in the crankcase is judged by the oil level viewed through the oil sight glass.

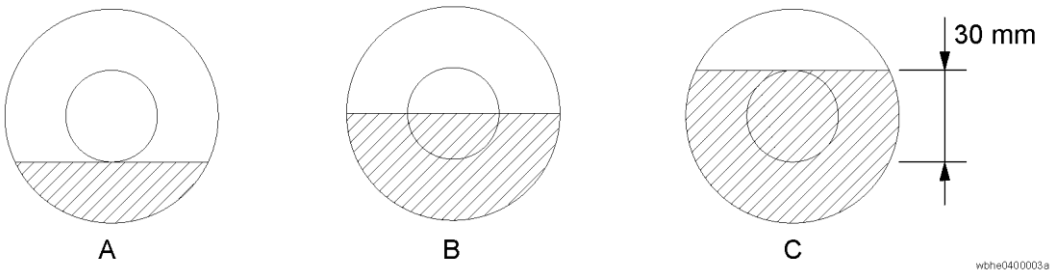

Symbol	Oil Quantity
A	Lower limit
B	Standard
C	Upper limit

During operation, oil level will decrease. Check the oil quantity through the oil sight glass and replenish oil so that the oil quantity does not fall below the lower limit. Oil must be supplied periodically, to compensate for that leaving the shaft seal and for the amount that is carried over to the separator.

Table 4-1 Initial Oil Supply Quantity (For Crankcase) (L)

	4WBHE	6WBHE	8WBHE	42WBHE	62WBHE
Upper limit	24.9	29.8	31.2	30.7	32.1
Standard	19.9	24.0	25.6	25.4	26.2
Lower limit	15.4	19.4	20.3	19.7	20.9
With oil tank	40.0	45.0	50.0	46.0	50.0

Note) Initial oil supply quantity for oil cooler and oil separator is not included.
Diameter of the yellow ring on the oil sight glass is approximately 30 mm.

4.2 Initial Operation

CAUTION

- **Scale trap metallic mesh canvas is included in the scale trap. Remove the canvas after test operation. Otherwise, the canvas may prevent suction, resulting in performance degradation.**
  For the compressors without scale trap, a canvas is included in the suction strainer. Remove it after test operation as well. Refer to "5.5.2 Flow of Work".

The equipment installed, can be for a many years. Therefore, initial operation is significantly important.

When approximately 24 hours have passed after the initial startup of the compressor, foreign materials such as dust, scale, rust, and sand in the piping can accumulate in the compressor because they flow with the refrigerant gas. Fine foreign materials that can not be removed by the scale trap or the suction filter will mix into the oil, resulting in failure or abnormal wear.

Suction of foreign materials into the compressor will continue until all foreign material has been pulled into the compressor, the greatest amount is suctioned after the initial startup.

Presence of foreign materials can be checked by inspecting the scale trap and the suction filter, and the checking of the oil.

The oil in the crankcase can be the first sign of contamination of the refrigeration system. Therefore, if the oil remains clear for a long period of time, it can be judged that inside of the equipment is also clean. If the oil seems to be slightly blackened or turbid in brown, the oil is contaminated with foreign materials in the equipment. Replace the oil as soon as possible so as to prevent foreign materials from penetrating into the moving sections of the compressor. Take sufficient care of the following two points:

- Inspection/cleaning of the filter and replacement of the oil
  - Cleaning of the filter may not be required when inside of the refrigerant cycle in the refrigerating, cold storage, and air conditioning systems are clean.
  - Replace the element.
- Watch for any abnormal sound or temperature of the compressor.

【POINT】

- Cleaning the oil filter, scale trap, and suction filters requires processing of the refrigerant and opening of the compressor. For processing of the refrigerant and assembly/disassembly of the compressor, refer to "Chapter 5. Maintenance".

Table 4-2 Reference of the Oil Replacement and Filter Inspection

Elapsed Time	Replacement of Oil and Cleaning of Oil Strainer	Inspection and Cleaning of CUNO Filter	Cleaning of Suction Filter	Cleaning of Scale Trap
After completion of refrigerant charging operation	×	×	—	—
After completion of trial operation	×	×	×	×
100 hours after starting operation	×	×	×	×
500 hours after starting operation	×	×	×	×
Every 1000 hours	×	×	×	×

Elapsed Time	Replacement of Oil and Cleaning of Oil Strainer	Inspection and Cleaning of CUNO Filter	Cleaning of Suction Filter	Cleaning of Scale Trap
Note	If contamination of the lubricating oils or clogging of the filter is found, perform an oil change or inspection/cleaning and replacement regardless of the above conditions.			

4.2.1 Initial Operation Method

CAUTION

- **When using a compressor stored for a long period of time (for one year or more) after purchase or a compressor that has not been operated for half year or more, always open the head cover, hand hole cover, and seal cover and inspect the inside before starting operation. At that time, apply oil and replace the O–rings of the mechanical seal.**

1. Before starting operation, rotate the crankshaft (manually) for 20 turns or more, and check that the oil level viewed through the oil sight glass has not decreased. If the shaft cannot be rotated manually, activate the motor (for about one or two seconds) to check that the oil pressure gauge operates.
   Otherwise, service life of each part will be dramatically shortened. Never fail to rotate the shaft.
2. Operate the compressor.
3. Perform the initial operation according to "Table 4-2 Reference of the Oil Replacement and Filter Inspection".

4.3 Capacity Control Order

The capacity control order is as follows:

Table 4-3 Capacity Control Order

Symbol	Description	Remarks
○	Cylinder number	
□	Unloader push rod number	
L	Leftward sloped cam ring	
R	Rightward sloped cam ring	
(　)	Capacity control order	Order to be unloaded from 100% loaded condition
*	Equipped only for 100% unload specification	The four cylinders in standard 4WBHE are equipped with unloader mechanisms. The purpose of this is to reduce the load during startup. The capacity control during normal operation is 100% to 50%.

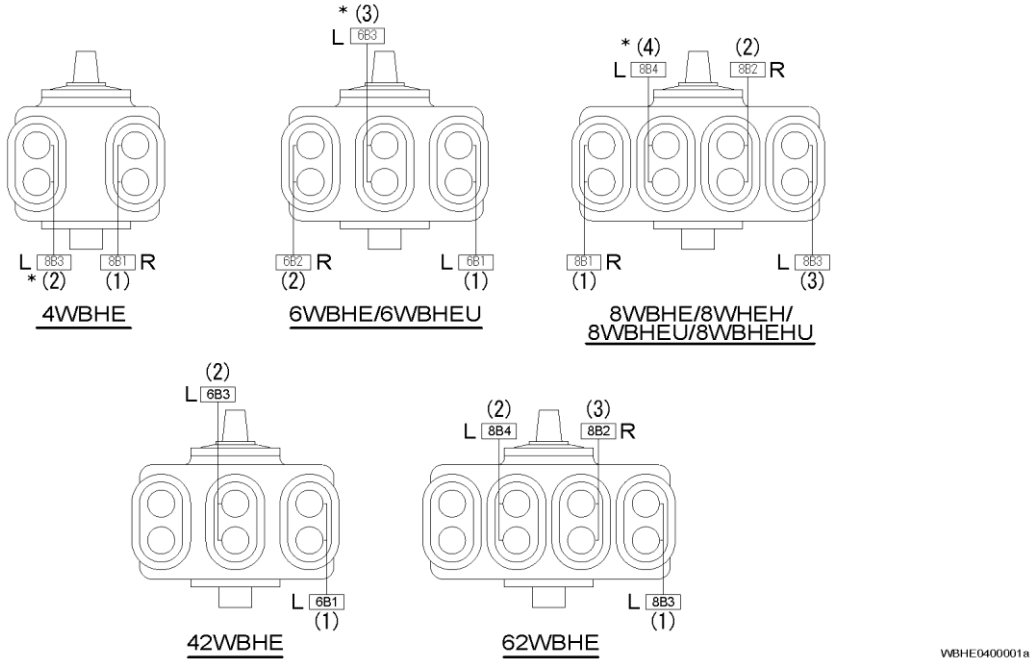

Fig. 4-1 Capacity Control Order

4.4 Operation Notices

Notices to protect the compressor during operation are as follows.

4.4.1 Start/Stop Limitation

To use the compressor normally, number of start/stop times and the stop time are specified as follows.

Table 4-4 Specification for Number of Start/Stop Times and the Stop Time

No.	Item	Qty.	Remarks
1	Number of start/stop times	3 times/hour	Refer to the operation manual of electrical equipment.
2	Stop time	At least 5 min	
3	Minimum operation time	At least 15 min	
4	Unloader operation interval	At least 3 min	To operate the compressor at 0% load, contact our sales offices or service centers.
5	Oil level	Oil sight glass 10—90%	

4.4.2 Settings

To use the compressor normally, each items are specified as follows.

Table 4-5 Settings

Item	Unit		Alarm	Trip	Remarks
Rotation speed	rpm	Maximum	-	> 1200 (no delay)	
		Minimum	-	< 800 (no delay)	
Discharge pressure	MPa	Maximum	> 2.36(*) (no delay)	> 2.6(*) (no delay)	Single-stage compressor Except 8WBHE/8WBHEU North America ADP is 1.78 MPaG,, TDP is 1.96 MPaG
			> 1.96(*) (no delay)	> 2.6(*) (no delay)	Single two-stage compressor and 8WBHE/8WBHEU North America ADP is 1.78 MPaG,, TDP is 1.96 MPaG
			> 0.60 (60 sec.)	> 2.6(*) (no delay)	Booster specification North America TDP is 1.96 MPaG
		Minimum	< 0.60 (30 sec.)	-	Except the booster specification
Suction pressure	MPa	Maximum	> 0.35 (30 sec.)	> 0.35 (60 sec.)	
			> 0.588 (30 sec.)	> 0.588 (60 sec.)	B.B specification
			> 0.05 (60 sec.)	-	Booster specification
		Minimum	< -0.0733 (30 sec.)	< -0.0733 (60 sec.)	
			< 0 (30 sec.)	< 0 (60 sec.)	B.B specification
Intermediate pressure For single two-stage compressor and separate two-stage	MPa	Maximum	> 0.822 (30 sec.)	> 0.822 (60 sec.)	R22 ≤ 1000 rpm HFCs ≤ 1000 rpm
			> 0.656 (30 sec.)	> 0.656 (60 sec.)	R22 ≤ 1100 rpm HFCs ≤ 1100 rpm

Item	Unit		Alarm	Trip	Remarks
			> 0.538 (30 sec.)	> 0.538 (60 sec.)	R22 ≤ 1200 rpm HFCs ≤ 1200 rpm
		Minimum	-	-	
Differential pressure (= Discharge - Suction) Calculate with absolute pressure	MPa	Maximum	> 2.0 (30 sec.)	> 2.0 (60 sec.)	Calculated value Single-stage compressor Except 8WBHE/8WBHEU
			> 1.52 (30 sec.)	> 1.52 (60 sec.)	Calculated value Single two-stage compressor
			> 1.47 (30 sec.)	> 1.47 (60 sec.)	Calculated value 8WBHE/8WBHEU
		Minimum	-	-	
Compression ratio (= Discharge / Suction) For single two-stage compressor Low stage: (= discharge / intermediate) High stage: (= intermediate / suction) Calculate with absolute pressure	-	Maximum	> 9 (60 sec.)	-	Calculated value NH_3
			> 10 (60 sec.)	-	Calculated value HFCs, R22
		Minimum	< 1.5 (60 sec.)	< 1.5 (120 sec.)	Calculated value
Oil supply pressure	MPa	Maximum	> 0.40 (30 sec.)	> 0.45 (30 sec.)	Calculated value = oil supplied - suction
		Minimum	< 0.12 (30 sec.)	< 0.10 (30 sec.)	
Discharge temperature	deg.C	Maximum	> 145 (5 sec.)	> 150 (no delay)	NH_3
			> 125 (5 sec.)	> 130 (no delay)	HFCs, R22
		Minimum	-	-	
Suction temperature	deg.C	Maximum	> 60 (60 sec.)	-	
		Minimum	< -58 (30 sec.)	< - 60 (30 sec.)	
Discharge superheat	K	Maximum	-	-	Calculated value Delay time for startup is 30 min.
		Minimum	< 15 (60 sec.)	< 10 (60 sec.)	
Suction superheat	K	Maximum	> 25 (60 sec.)	-	Calculated value Delay time for startup is 30 min.
		Minimum	≤ 0 (30 sec.)	≤ 0 (60 sec.)	Calculated value
Oil supply temperature	deg.C	Maximum	> 50 (60 sec.)	> 55 (60 sec.)	Delay time for startup is 30 min.
		Minimum	< 30 (60 sec.)	< 25 (60 sec.)	

1) Maximum permissible time for the delay time is described in the parentheses.
2) The setting values are specified for the purpose to protect the compressor.
3) Pressures described are the readings on the pressure gauge.
4) If there are additional agreements, that agreement takes precedence in principle.

4.4.3 Action for Stopping the Compressor for Long Period of Time

If the compressor will be stopped for a long period of time, close the suction (side)/discharge (side) shut off valves, then set the motor (main power), heater power, and control board power to "OFF".

4.4.4 Operation after the Compressor has been Stopped for Long Period of Time

Refer to "4.2.1 Initial Operation Method".

4.4.5 Lubricating the Mechanical Seal before Start up

Before starting the compressor or after the compressor has been stopped for a long period of time, oil must be supplied to the mechanical seal and oil passages in the compressor. Perform the procedures in sections 4.4.5.1 and 4.4.5.2.

CAUTION

- **When replenishing the oil, be careful that the oil will not be contaminated by air or water.**
- **When replenishing the lubricating oils, use clean new oil.**
- **To prevent bubbling in the crankcase, supply the oil gradually.**
- **To avoid absorption of water vapor in the air, store the oil sealed until it is needed.**

4.4.5.1 Initial Oil Supply to the Mechanical Seal Section

1. The product purchased from Mayekawa is filled with N_2 gas. Discharge N_2 gas from the purge valve.
For the product purchased from someplace other than Mayekawa, discharge the internal gas as well, so that the oil can be easily supplied.

【POINT】

- How to discharge N_2 gas is described on a tag on the purge valve.

2. Clean the dust and contaminants on the top of the cover plate. Make sure to clean the dust and contaminants around the R1/8 hexagon socket screw plug on the upper part of the cover plate flange.

3. Remove the R1/8 hexagon socket screw plug on the upper part of the cover plate flange.

【POINT】

- Be careful not to lose the hexagon socket screw plug as it is very small.

4. Pour the lubricating oils (200 to 300 ml) from the hole where the hexagon socket screw plug was removed.

5. Reattach the hexagon socket screw plug to the upper part of the cover plate flange.

4.4.5.2 Initial Oil Supply to the Oil Passages in the Compressor (Rotating the Crankshaft)

1. Supply oil from the initial oil supplying port to the oil pan.

2. Manually rotate the crankshaft to the rotational direction for 20 times or more so as to spread the lubricating oils in the oil passages.
After manually rotating the crankshaft, check that the oil level viewed through the oil sight glass on the crankcase has decreased.

3. After all the preparation work such as charging the refrigerant has finished, start the compressor.

4.4.6 Oil Pressure Regulating Valve

As in the following figure, a threaded, spring load type oil pressure regulating valve is used in the main bearing head.

The valve plate in this regulating valve is pressed against the seat by the force of a spring. Thus, certain amount of change in oil pressure is adjusted by the pressing force of the valve plate.

Also, in the case of rapid pressure increase, for instance, when starting the compressor after a stoppage where the viscosity of the oil high, the regulating valve works as a safety valve to protect the oil pressure gauge or the pressure switch.

To adjust pressure which cannot be adjusted by the force of the spring, increase the space by turning the valve stem to change distance of the valve plate and the valve seat. WHAT THE??? DO NOT UNDERSTAND

Adjusting the oil pressure by valve stem must be performed under standard operation condition. Do not perform this method shortly after starting up the compressor or when the compressor is heated.

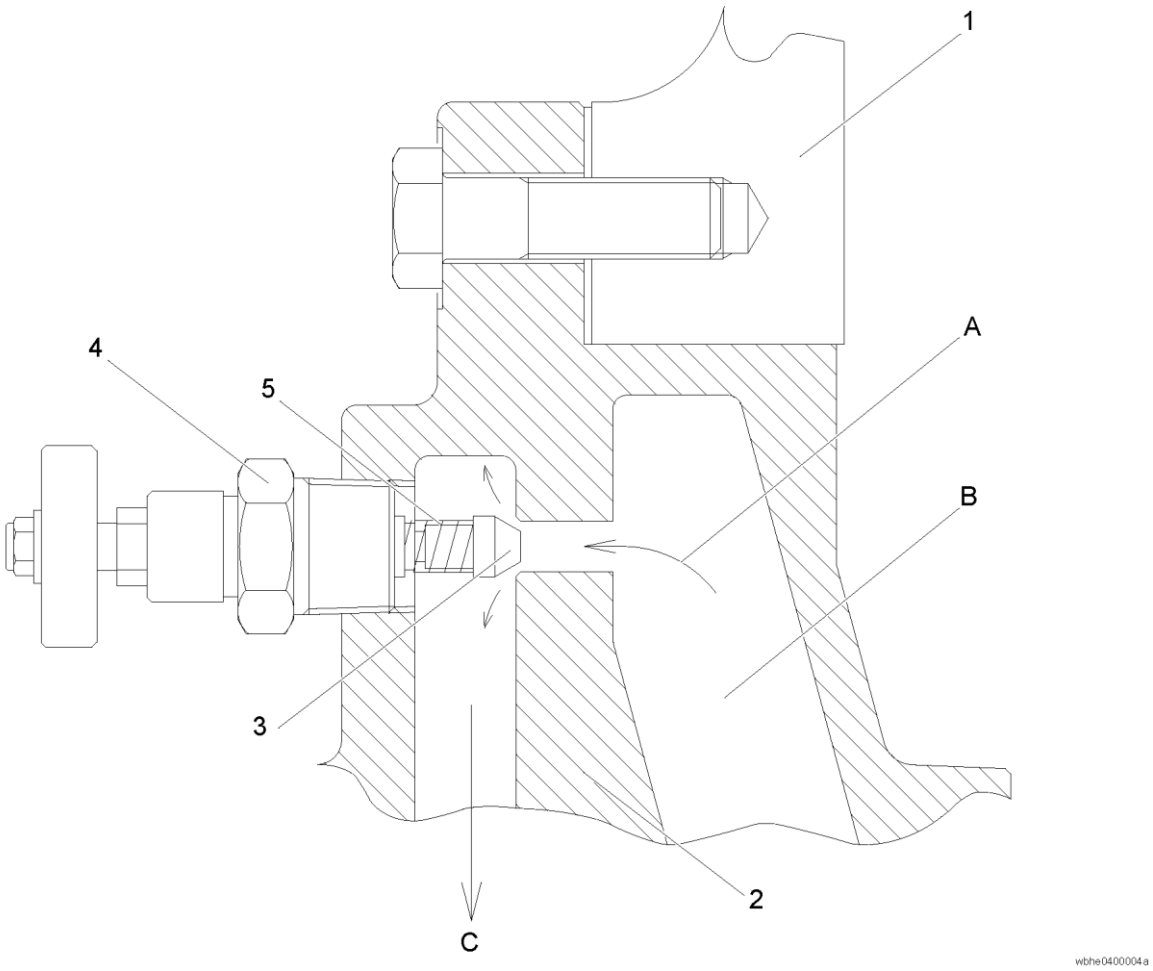

Fig. 4-2 Oil Pressure Regulating Valve

Symbol	Description
A	Oil flow
B	Oil pressure maintained
C	To the oil chamber

No.	Description
1	Crankcase
2	Main bearing head
3	Valve body
4	Oil pressure regulating valve
5	Spring

4.4.7 Starter

If the compressor is started in full voltage, the crankshaft may be overloaded and may damage the shaft. Especially for compressor with eight cylinders, the shaft may be damaged in a short time. Start up the compressor using star-delta starting method, inverter method, or soft starter method.

4.4.8 Operation after Replacing Oil Pump

1. While supplying oil from the inlet side, rotate the oil pump shaft in the same direction as operating direction. Check that the oil is discharged from the oil outlet side.
2. After assembling the oil pump to the main bearing head, manually rotate the crankshaft to the rotational direction for 20 times or more so as to spread the oil in the oil passages.

【POINT】

- The oil pump inlet and outlet differs depending on the rotational direction. Always check the operating rotational direction when supplying oil.

5 Maintenance

5.1 Safety Precautions for Maintenance

- Be careful so as not to receive an electrical shock when turning on/off the power of each unit.
- Before performing maintenance, turn off the motor (main power) and control power, and then perform lockout and tag out.
- Before performing maintenance, turn off power to items such as heaters. Perform tag out lockout.
- Check that pressure inside the compressor is at atmospheric pressure before disassembling the compressor for inspection.
- After temperature of the hot sections (such as head cover) is decreased to normal, perform the work.
- When handling the heavy objects, take a sufficient care and perform the work using an auxiliary tool such as a stud bolt.
- Always handle the heavy objects with at least one other person.

- Replace the parts with the MAYEKAWA genuine parts.
- When disassembling/assembling the compressor, use the correct tools.
- All works should be performed only by those certified.

5.2 Periodic Inspection

【POINT】

- Record the operation condition of the compressor, and details of periodic inspection and maintenance in the operation log. By recording the operation logs correctly, the refrigeration systems can be operated efficiently and safely. This will be useful for investigating the cause immediately and adequately in case of equipment failure.

5.2.1 Daily Inspection

【POINT】

- Perform daily inspection every 2—3 hours, and record the result in the operation log.

Item		Remarks
Compressor	Suction pressure	
	Discharge pressure	
	Oil supply pressure	
	Suction temperature	
	Discharge temperature	
	Fluid level of the receiver	
	Oil level of the crankcase (oil quantity)	Refer to "4.1.5 Oil Quantity".
	Oil temperature	
	Abnormal noise	
	Abnormal vibration	
	Cooling water hose	For the specification with the water cooled oil cooler and water cooled head jacket
	Cooling water hose band	For the specification with the water cooled oil cooler and water cooled head jacket
	Oil quantity leaked from shaft seal drain	Once a day
Others	Current value applied to the electrical equipment	
	Flow rate of cooling water for the condenser	
	Temperature inside the mechanical room	
	Replenishment of refrigerant	

5.2.2 Monthly Inspection

【POINT】

- Verify the operation of the pressure switch using a pressure tester. Do not increase the actual discharge pressure.

Inspection Items		Remarks
Compressor	Looseness of couplings	Refer to "3.2.5.4 Centering of the Compressor/Driving Machine and Attachment of the V-belt".
	Belt tension	Refer to "3.2.5.4 Centering of the Compressor/Driving Machine and Attachment of the V-belt".
	Cracking of the belt	Refer to "3.2.5.4 Centering of the Compressor/Driving Machine and Attachment of the V-belt".
	Inspection of the protection switch operation	
	Oil leakage from the shaft seal	5 mL/h or less: Normal
		5 - 10 mL/h or less: To be monitored
		10 mL/h or more: To be inspected
	Inspection and cleaning of the cooling systems	The specification with the water-cooled condenser: A large amount of water stain and scale may be adhered to the condenser depending on the cooling water quality. In such a case, a regular cleaning of the cooling pipes in the condenser is required.
	Analysis of lubricant	Refer to "5.4 Lubricating Oils Control Standard".

5.2.3 Biannual Inspection

Inspection Items		Remarks
Compressor	Pressure gauge	Calibrate the gauges using a standard gauge. Replace if it has a margin of error of minimum scale or more.
	Thermometer	Replace if it has a margin of error of minimum scale or more.

5.3 Maintenance (Overhaul)

CAUTION

- **Frequency of the maintenance differs depending on the equipment model, refrigerant, and number of rotations, usage condition, equipment status, and oil types. The parts are replaced at your expense.**
  If there is an article of separate agreement for maintenance inspection, the description written on the agreement takes precedence in principle.
- **Normally, replace the WBHE series consumable materials during the maintenance (overhaul).**

5.3.1 Maintenance Period and Operation Conditions

The reference maintenance timings are as follows:

Preconditions

(1) The operation conditions are within the specified range of use.

(2) Number of start/stop is within the specified range.

Table 5-1 Reference of the First Maintenance Period

First Maintenance	Remarks
Whichever comes first: Operation time of 6000 hours or 1 year	

Table 5-2 Reference of the Second Maintenance Period

Second Maintenance	Remarks
Whichever comes first: Operation time of 12000 hours or 2 years	

Table 5-3 Reference of the Third Maintenance Period

Third Maintenance	Remarks
Whichever comes first: Operation time of 24000 hours or 4 years	

5.3.2 First Maintenance

Remove the cover plate, head cover, and hand hole cover. When no abnormality is found, it is not necessary to remove the crankshaft and main bearing head.

Inspection Sections	Inspection Items	Remarks
Valve Plate	Replacement	Suction and discharge
Plate valve spring	Replacement	Suction and discharge
Cylinder sleeve	Inspection	To be replaced if any abnormality is found
Piston	Inspection	To be replaced if any abnormality is found
Piston ring	Replacement	
Piston pin	Inspection	To be replaced if any abnormality is found
Connecting rod bearing halves	Replacement	
Crankshaft pin	Inspection	To be replaced if any abnormality is found
Shaft seal assembly	Inspection	To be replaced if any abnormality is found
Oil control ring	Replacement	
Thrust roller bearing (thrust ball bearing)	Inspection	To be replaced if any abnormality is found, B. B specification
Connecting rod bushing	Inspection	To be replaced if any abnormality is found
Gasket	Replacement	
O-ring	Replacement	
Suction filter	Cleaning	
Oil strainer	Cleaning	
Lubricant	Replacement	
Motor	Replenishment of grease	Refer to the operation manual of electrical equipment. If no particular description is provided, it is recommended to replenish the grease every 1,000 hours.

5.3.3 Second Maintenance

Perform the first maintenance items and the following items as well:

Remove the crankshaft and main bearing head.

Items for the second regular inspection are as follows.

Inspection Sections	Inspection Items	Remarks
Main bearing	Inspection	To be replaced if any abnormality is found
Thrust bearing	Inspection	To be replaced if any abnormality is found
Thrust roller bearing (thrust ball bearing)	Replacement	B.B specification
Crankshaft	Inspection	To be replaced if any abnormality is found
Piston pin	Replacement	
Shaft seal assembly	Replacement	
Oil strainer	Replacement	
Connecting rod bushing	Replacement	Other than for high stage of two-stage compressor
Connecting rod needle bearing	Replacement	For high stage of two-stage compressor
Other parts	Inspection	To be replaced if any abnormality is found

5.3.4 Third Maintenance

Perform the second maintenance items and the following items as well:

Items for the third regular inspection are as follows.

Inspection Sections	Inspection Items	Remarks
Discharge valve seat	Replacement	
Valve plate	Replacement	

5.4 Lubricating Oils Control Standard

The lubricating oil, to which the control standard is applied, is classified as follows:

1. Mineral oil: naphthene series, synthetic oil: alkyl benzene (AB), polyalphaolefin (PAO)

2. Synthetic oil: polyalkylene glycol (PAG) (Applicable refrigerant is NH_3.)

The control standard may be changed without notice depending on the performance.

Table 5-4 *1.* Mineral Oil: Naphthene Series, Synthetic Oil: Alkyl Benzene (AB), Polyalphaolefin (PAO)

Item	Standard
Color phase	ASTM color standard: 6.0 or less
Total acid value	0.3 mg•KOH/g or less
Kinetic viscosity	Amount of change must be within ±15% of the new oil.
Water amount	100 ppm or less
Degree of contamination	Degree of contamination measured by mass method (millipore value) is 15 mg/100 m or less.

Table 5-4 *2.* Synthetic Oil: Polyalkylene Glycol (PAG) *3 (Applicable Refrigerant is NH_3)

Item	Standard
Color phase	ASTM color standard: 4.0 or less
Total acid value	0.1 mg•KOH/g or less
Kinetic viscosity	Amount of change must be within ±15% of the new oil.
Water amount	2000 ppm or less *1
Degree of contamination	Degree of contamination measured by mass method (millipore value) is 15 mg/100 m or less. *2

*1 This is a reference value because water may be included in sampling due to its high absorbability. In the NH_3 refrigerant, NH_3 may be detected as water. If the amount is over this value by repeating the sampling for several times, it should be taken as the control standard exceeded.

*2 It is assumed that the following types of the oil filter are used: Paper filter (Filtering grain size of approx. 10 µm) for fluorocarbon, paper filter or metallic mesh filter (300 meshes) and bypass filter (Filtering grain size of approx. 3 µm) for NH_3

*3 For NH_3 + PAG, the rust is easily created inside the equipment due to water absorption. Because the cleaning effect of PAG is higher than other conventional mineral oils, the rust in the equipment is easily carried into the compressor so that the degree of contamination tends to increase at the beginning of the operation. Therefore, it is recommended to replace the oil after 2000—3000 hours have passed since the operation start. To prevent water absorption while charging the oil, it is desirable to avoid a rainy day. Complete charging of the oil within 15 min after the bale can is open.

5.5 Disassembly

DANGER

- **Be sure to turn OFF the motor main power and control power prior to system inspection and maintenance. Failure to keep the power OFF during system inspection and maintenance causes the compressor to come into action that could pose a danger to personnel. Potential personal injury through getting caught in the V-belt and/or rotating equipment, and/or potential electric shock at energized sections may occur.**

WARNING

- **Disassembly of the compressor is allowed only when the compressor is de-pressurized. A potential release of high-pressure gas or oil may occur upon disassembly if these are present in the compressor, it may lead to potential personal injury including suffocation and/or fainting.**
- **Be sure to turn off the heater prior to system inspection and maintenance. Failure to keep the power OFF during system inspection and maintenance may lead to potential personal injury such as an electric shock at energized sections and burns on heated surfaces.**
- **Exercise caution to avoid an electric shock when turning ON and OFF the power.**

CAUTION

- **Be sure to use the proper specified tools when disassembling the compressor. Potential personal injury may occur if disassembly is attempted with a worn-out or damaged tool.**
- **Exercise due caution when handling heavy objects. Use of auxiliary tools such as a safety bolt is required to keep a part secured so that the risk of personal injury is reduced.**

5.5.1 Requirements for Disassembly

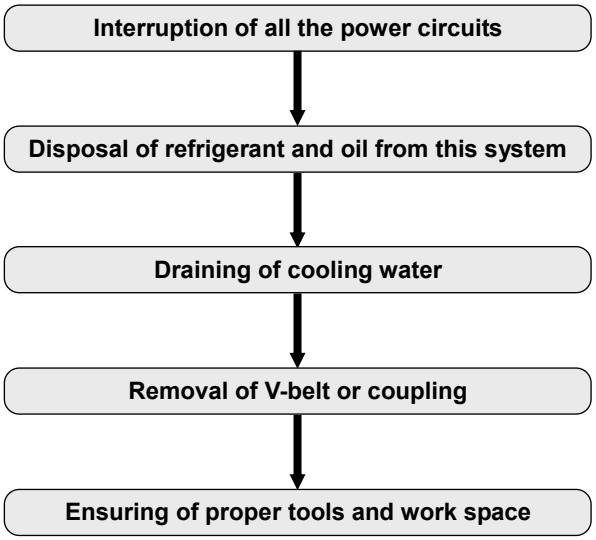

Fig. 5-1 Requirements for Disassembly

5.5.1.1 Interruption of All the Power Circuits

All the power circuits including the main power circuit and control power supply are to be tagged out or locked out before disassembly.

5.5.1.2 Disposal of Refrigerant and Oil from This System

System disassembly requires prior recovery of the refrigerant remaining in this system to prevent its dispersion into the atmosphere.
An abundance of refrigerant dissolves in the lubricating oils that cause the remaining refrigerant to vaporize from the oil. A rise in pressure in the crankcase is observed with the passage of time. Perform the recovery of the refrigerant until pressure increase subsides.
With the crankcase vented to atmosphere after refrigerant recovery is completed, drain oil through the drain valve.

5.5.1.3 Draining of Cooling Water

Drain the cooling water through the drain cock or drain valve.

5.5.1.4 Removal of V-belt or Coupling

⚠ WARNING

- **The pulley hub and coupling hub are heavy objects. Use assistance, 4 or more workers, for their removal.**

With the V-belt or coupling removed, this system is to be removed from the motor.
Pull the pulley hub or coupling hub from the end of the crankshaft with the use of the pulley extractor.

【POINT】

- The pulley hub and coupling hub are configured to be pulled out of the shaft easily with a slight pull on the face of the tapered shaft.

Fig. 5-3 Removal of Pulley Hub

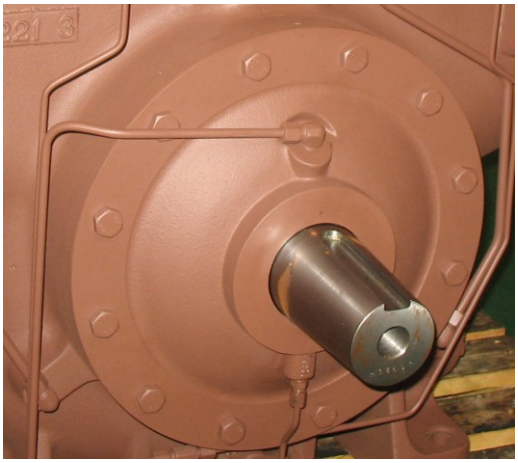

Fig. 5-2 System with No Pulley Hub

5.5.1.5 Ensuring of Proper Tools and Work Space

A work space is required to keep the required tools and disassembled parts organized. Have the required tools including oil for cleaning and re-assembly of the disassembled parts and waste cloth available.

5.5.2 Flow of Work

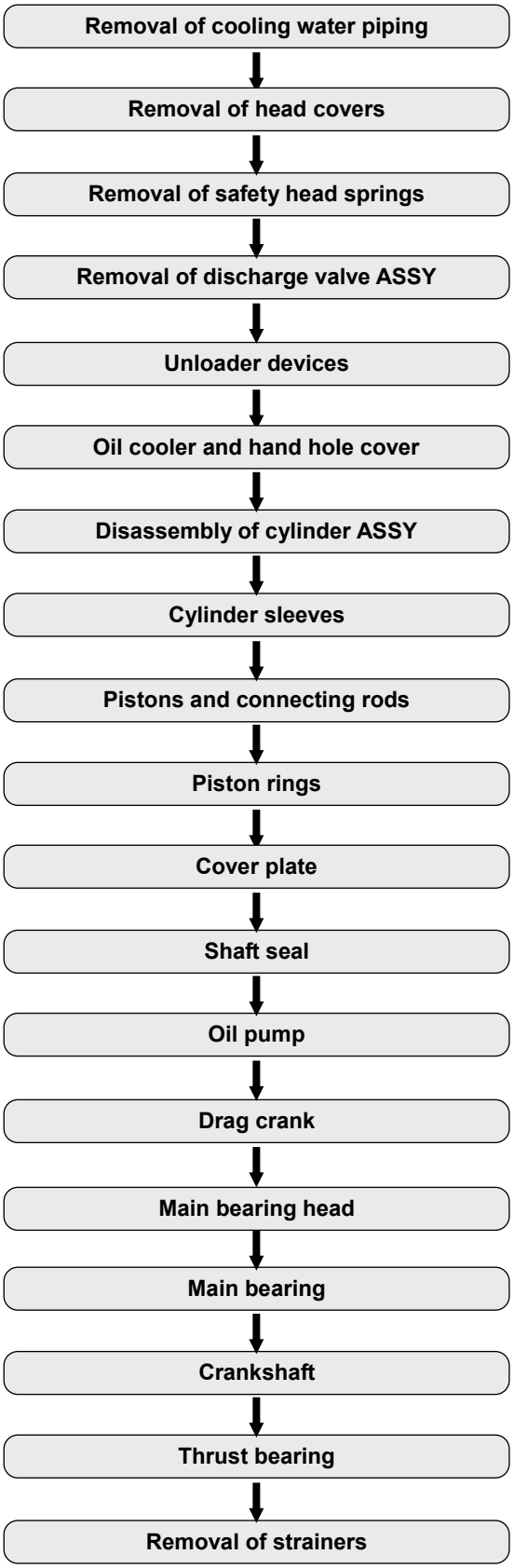

Fig. 5-4 Flow of Work

5.5.2.1 Removal of Cooling Water Piping

Cooling water piping falls into two types: water-cooled oil cooler and direct-expansion oil cooler. "3.2.5.5 Piping" shows the connections of each cooling water piping system.

The compressor head covers are connected with pressure braided hoses. The pressure braided hoses are secured to the hose nipples with hose bands. The removal of the pressure braided hoses requires loosening of the hose bands. The black pressure braided hoses cannot be reused after disassembly.

【POINT】

- If the hose nipple is connected with the flange as shown in Fig. 5-6, an easy removal of the hose is assured by undoing the bolts that allows the flange to come off.
  Black pressure braided hoses which differ from the one shown in the figure are used in some areas.

5.5.2.2 Removal of the Head Cover

⚠ WARNING

- **Heavy object. Use assistance, 2 or more workers, for the removal of the head cover.**

The head cover comes in the following two types: covers for water cooling (Fig. 5-6) and for air cooling (Fig. 5-7). If cleaning does not involve internal jacket cleaning, the head cover needs to be removed with the head jacket cover attached, regardless of cover type. Starting with the removal of head cover prevents foreign objects from entering the cooling water out of the system.

Fig. 5-6 Jacket Cover for Head Cover

Fig. 5-5 Head Cover (Air Cooled)

1. Undo the upper center bolt (1 pc.) securing the head cover, and insert the safety bolt as shown in Fig. 5-7.

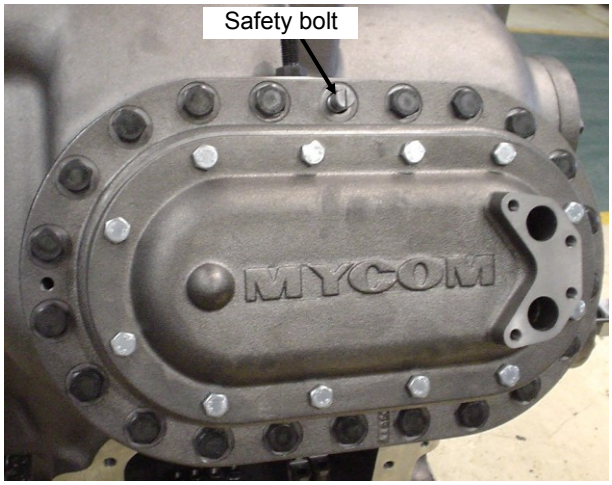

Fig. 5-7 Head Cover (Water Cooled)

2. Remove the bolts (2 pcs. at a time) at diametrically opposed positions, in rotation.
3. Loosen the last two bolts.
   The head cover is pushed outward by spring tension if the head cover gasket does not stick to the cover.

WARNING

- **The head cover gasket may stick to the head cover. In the above event, the gaskets must be manually removed. To remove the gaskets, push the releasing bolts (2 pcs.) in the corresponding holes on both sides of the head cover flange. Be careful that the head cover does not pop out by spring tension it may result in potential personal injury.**

4. Loosen the bolts alternately to remove.
5. Remove the head cover by pulling it out along the safety bolt.

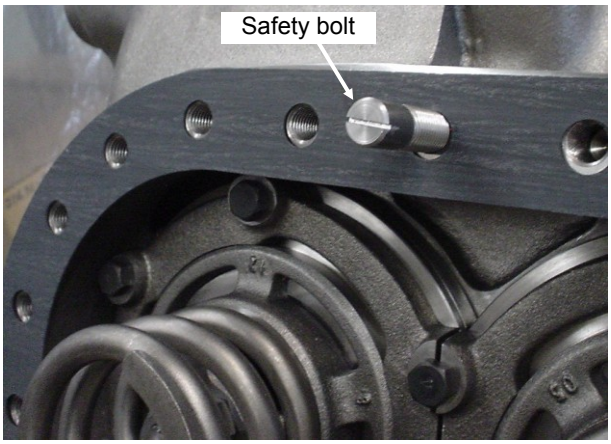

Fig. 5-8 Removal of Head Cover

5.5.2.3 Removal of Safety Head Spring

The safety head spring is sandwiched between the head cover rear side and discharge valve cage, as presented in Fig. 5-9. The spring, which is positioned with reference to the convex part of the cage top fits over the inside of the spring, and is designed to easily snap out of position if pulled out as shown in the following Fig. 5-9.

1. Remove the safety head spring by pulling it off.

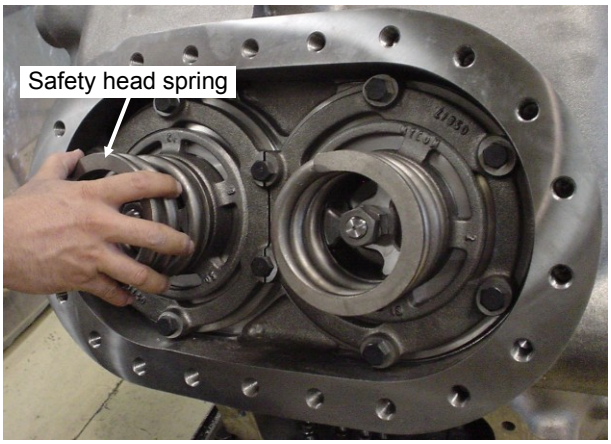

Fig. 5-9 Removal of Safety Head Spring

⚠ CAUTION

- **Operation with ammonia refrigerant that discharges at high temperatures forms carbide that causes the safety head spring to be in close contact with the discharge valve cage. The discharge valve ASSY can become detached together with the safety head spring, which carries a risk of the discharge valve ASSY falling. (makes no sense)**

5.5.2.4 Removal of Discharge Valve ASSY

The discharge valve ASSY is installed fitting inside of the discharge valve cage guide, which allows you to remove the ASSY by pulling the nut out as shown in Fig. 5-10. Make sure to pull the nut out straight to keep it from getting snagged. If the nut does not have any freedom of movement, reset it and retry pullout.

1. Hold the nut and pull it out.

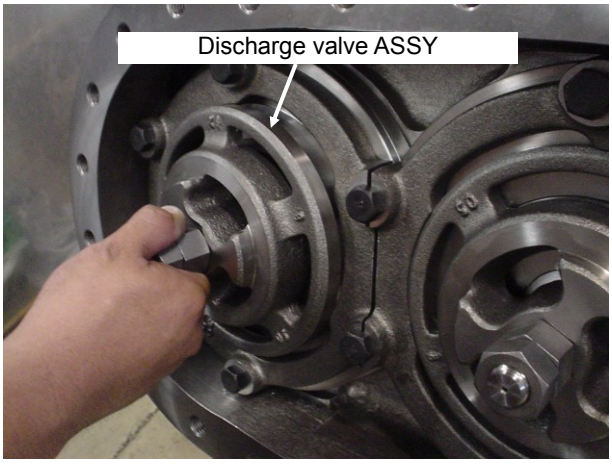

Fig. 5-10 Removal of Discharge Valve ASSY

CAUTION

- **Keep foreign objects out of the cylinder when the cage removal is completed. If the disassembly procedure is not carried out carefully, foreign objects entering the cylinder may scratch its inside surface during operation of the compressor. Foreign objects present in the cylinder may scratch its inside surface during piston action.**

■ Disassembly of Discharge Valve ASSY

This task is not necessary unless otherwise specified, except for part replacement and overhaul.

1. With the specified tools, undo the nut and remove the bolt.
All the parts are removable.

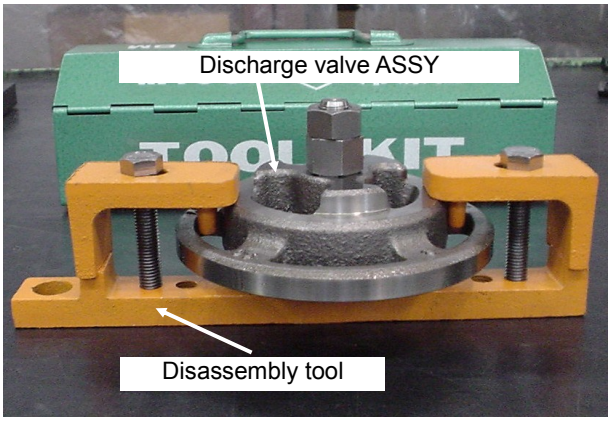

Fig. 5-11 Disassembly of Discharge Valve ASSY

■ Components

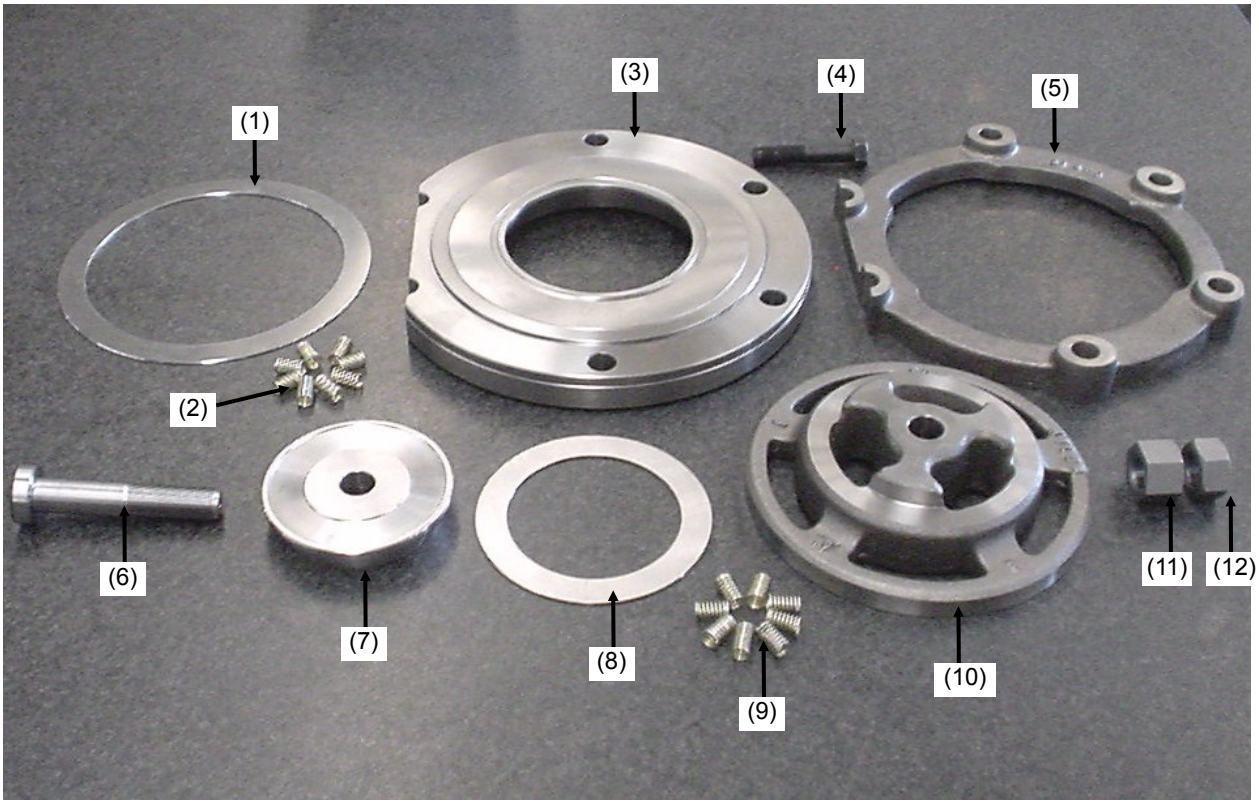

Fig. 5-12 Components

Table 5-5 Components

No.	Component	
(1)	Suction valve	Components for the suction plate valve ASSY
(2)	Suction valve spring	
(3)	Valve plate	
(4)	Discharge valve cage guide bolt	
(5)	Discharge valve cage guide	
(6)	Discharge valve seat bolt	Components for the discharge valve ASSY
(7)	Discharge valve seat	
(8)	Discharge plate valve	
(9)	Discharge plate valve spring	
(10)	Discharge valve cage	
(11)	Discharge valve seat nut (No.1)	
(12)	Discharge valve seat nut (No.2)	

5.5.2.5 Unloader Device

The disassembly of the unloader device is required only when an abnormal event has occurred. The oil pipe is to be disconnected first before disassembling the unloader device.

1. Undo the unloader piston cover, and remove the unloader piston cover.
2. Pull out the unloader piston, unloader device push rod, and unloader device spring in this order.
3. The unloader device push rod varies in length in relationship to the physical size to the cylinder. The positional relationship between the engraved numbers of the push rod and cylinder needs to be recorded to ensure proper assembly.

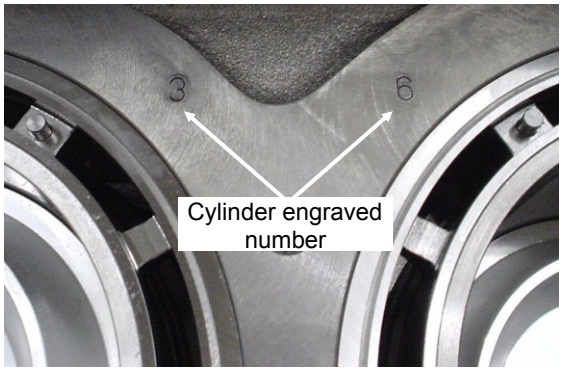

Fig. 5-13 Crankcase

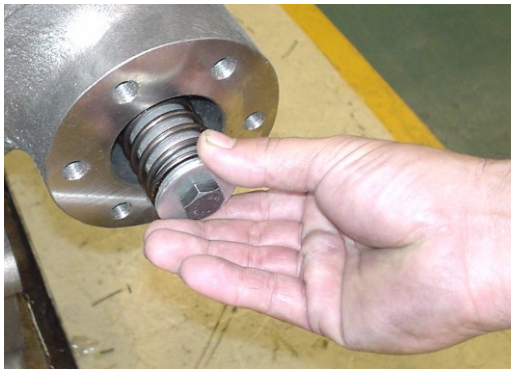

Fig. 5-14 Unloader Device Push Rod

【POINT】

- The components for the unloader device fall into two types: components configured to be embedded in the crankcase (see Fig. 5-15) and components configured to be attached to the cylinder sleeve (see Fig. 5-16).

Fig. 5-15 Components for the Unloader Device (Crankcase Built-in Type)

Table 5-6 Components for the Unloader Device (Crankcase Built-in Type)

No.	Component
(1)	Unloader device push rod
(2)	Unloader device spring
(3)	Unloader push rod washer
(4)	Unloader push rod bolt
(5)	Unloader piston

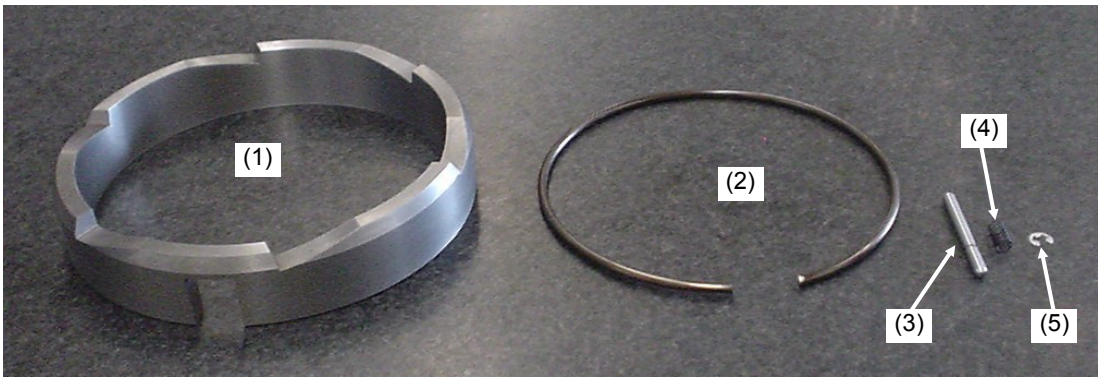

Fig. 5-16 Components for the Unloader Device (Cylinder Sleeve Attachment)

Table 5-7 Components for the Unloader Device (Cylinder Sleeve Attachment)

No.	Component
(1)	Unloader cam ring (leftward sloped)
(2)	Retaining ring
(3)	Lift pin
(4)	Lift pin spring
(5)	Lift pin stop ring

5.5.2.6 Oil Cooler and Hand Hole Cover

⚠ WARNING

- **Heavy object. Use the assistance, of 2 or more workers, for the removal of the oil cooler and hand hole cover.**

The disassembly of the cylinder requires prior removal of the oil cooler and the hand hole cover. With the nuts securing the oil cooler and piping loosened, disconnect the oil pipe.

【POINT】

- The water-cooled oil cooler, as shown in Fig. 5-17, is secured to the hand hole cover with nuts (4 pcs.) The oil cooler can be removed from the hand hole cover after the nuts (4 pcs.) are undone.
- The direct-expansion oil cooler, as shown in Fig. 5-18, is secured to the crankcase with bolts. The oil cooler is to be detached through the notch by steering clear of the bolt head if lifted and pulled toward you with the bolts on both sides (2 pcs.) loosened.

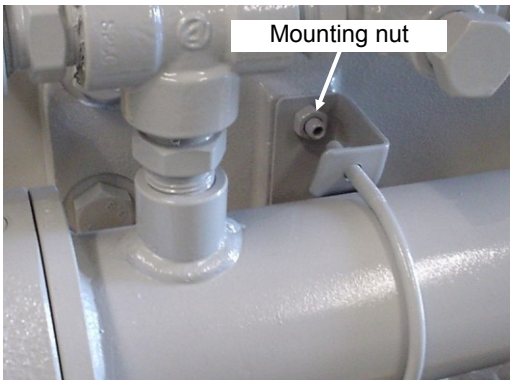

Fig. 5-17 Water-cooled Oil Cooler

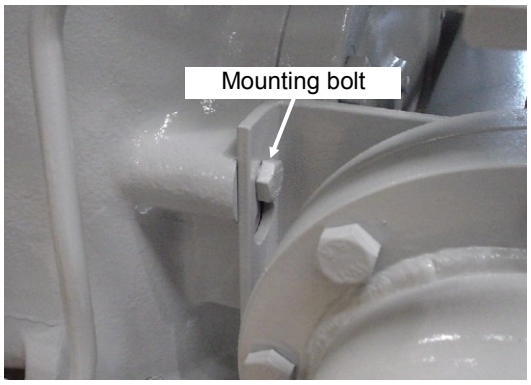

Fig. 5-18 Direct-expansion Oil Cooler

【POINT】

- If the automatic oil return pipe from the oil separator and equalizing pipe from the oil tank are installed to the hand hole cover, disconnect all the pipes. Ensure that electric wiring is disconnected if the hand hole cover is fitted with an oil heater.
- It is not necessary to remove the oil heater.

1. Undo the upper center bolt (1 pc.) securing the hand hole cover, and insert the safety bolt.
2. Loosen and undo all the remaining bolts. If the gasket sticks to the hand hole cover, push the releasing bolt in the corresponding hole on the hand hole cover flange and remove the gasket.
3. Remove the hand hole cover by pulling it toward you along the safety bolt. Exercise caution not to damage the oil heater if it has not been dismounted.

5.5.2.7 Disassembly of the Cylinder ASSY

The disassembly of the cylinder ASSY requires the removal of the cylinder sleeve, piston, and connecting rod from the crankcase to which it is assembled.

⚠ CAUTION

- **The cylinder is a heavy object. Exercise caution to keep the processing crankshaft and crankcase free of flaws when removing the cylinder ASSY.**

1. Position the piston of the intended cylinder ASSY in BDC (lowermost part).
2. Loosen and undo the discharge valve cage guide bolt.
3. Insert the fingers into the hole in the center of the valve plate, and remove the valve plate and discharge valve cage guide with them aligned, as shown in Fig. 5-19.
   The suction valve remains on the cylinder sleeve seat.

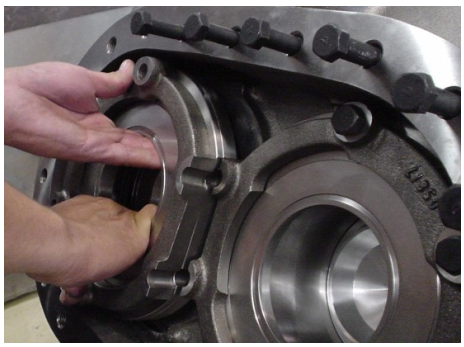

Fig. 5-19 Removal of the Valve Plate

4. Remove the suction valve.
5. Undo the nuts for the connecting rod bolts securing the cylinder ASSY, as shown in Fig. 5-20.
   Make sure to remove the nuts No.1 and No.2 in this order. The nuts are designed to come off when the connecting rod cap is pulled downward.

Fig. 5-20 The loosening of the Connecting Rod Bolt Nut

⚠ WARNING

- **Heavy object. Use assistance, 2 or more workers, for the removal of the cylinder ASSY.**

6. Remove the connecting rod bolt before the removal of the cylinder ASSY. Potential damage to the crankshaft may occur during the cylinder removal if this is disregarded.

7. With the eyebolt inserted into the screw hole on the piston head, pull out the piston to take the cylinder ASSY out of the crankcase.
If a tight fit between the cylinder sleeve and crankcase is observed, loop a wire over the ribs of the cylinder sleeve collar and pull out the cylinder ASSY along with the piston. The cylinder sleeve on the high stage of the single two-stage compressor is secured with the cylinder sleeve O-ring, which requires force for its removal.

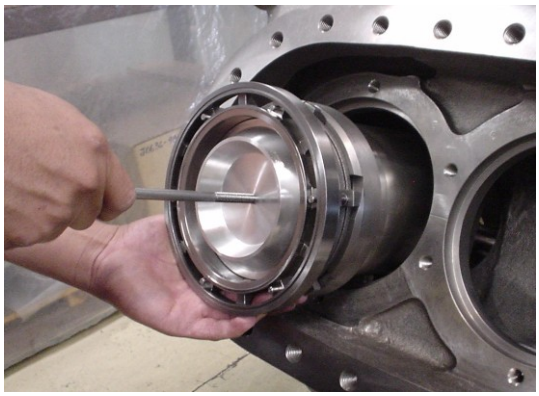

Fig. 5-21 Removal of the Cylinder Assembly

【POINT】

- The piston ring will protrude through the top of the cylinder if piston is pulled to pull out the cylinder ASSY, which prevents a smooth removal of the piston and rod ASSY from the cylinder sleeve.

CAUTION

- **The connecting rod large end may get caught in the mid-feather wall of the crankcase when pulling out the diagonal cylinder ASSY. Make sure to remove the cylinder ASSY by holding it with hands through the hand hole, to keep the connecting rod from getting snagged on the crankcase.**

8. The disassembled cylinder ASSY's are to be organized in cylinder serial order, which helps in proper re-assembly.

Fig. 5-22 Cylinder Assembly

5.5.2.8 Cylinder Sleeve

This work should only be done on a clean wooden board, rubber, or plastic sheet. Exercise caution when placing the cylinder ASSY on its side.

1. With the cylinder sleeve supported, hold the connecting rod and pull the piston and rod ASSY toward you, as shown in Fig. 5-23.

Fig. 5-23 Removal of the Piston and Rod ASSY from the Cylinder Sleeve

【POINT】

- The cam ring embedded in the cylinder sleeve requires no disassembly with normal use. The cam ring comes in two types, rings with a notch bevel leftward and with a notch bevel rightward. This is in relation to the operative directions according to cylinder side. Make sure each cylinder sleeve is re-assembled in its original position.

Fig. 5-24 Piston and Rod ASSY

5.5.2.9 Pistons and Connecting Rod

The piston is to be placed with its head in a downward position.

1. Use the pliers to remove the piston pin lock spring.

2. Push the piston pin to remove it.

【POINT】

- If a tight fit is found between the piston and piston pin, push out the piston pin with light taps from a piece of wood.

3. The piston is designed to be detached from the connecting rod after removal of the piston pin.

【POINT】

- The connecting rod is assigned with a 3-digit sequence number on the rod and its cap (see Fig. 5-25).The cylinder number is inscribed on the other side as shown in Fig. 5-26. The disassembled connecting rod and cylinder should be arranged in pairs.

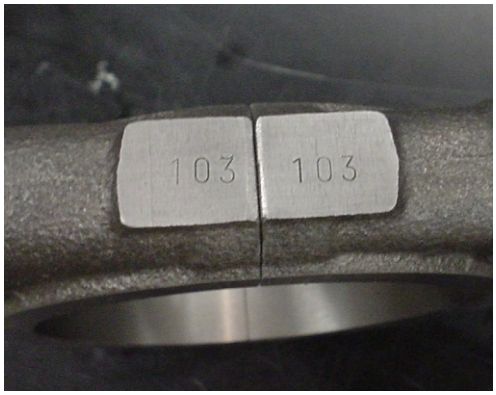

Fig. 5-25 Sequence Number

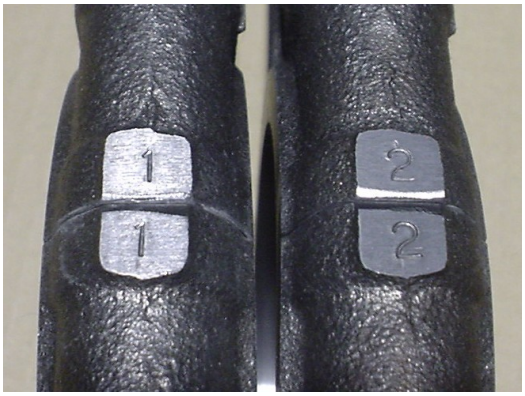

Fig. 5-26 Cylinder Number

5.5.2.10 Piston Ring

The piston rings should be inspected at the proper intervals and be replaced if necessary.. Use the following procedure for removing the piston rings.

1. Remove the piston ring with the specified disassembly tool as shown in Fig. 5-27.
If no specified tool is available, form a vinyl-coated electric wire or insulation lock into a loop (see Fig. 5-27). (see Fig. 5-28).

CAUTION

- **The removal of the piston rings must be done carefully. Unnecessarily expanding the piston rings can cause damage to the rings resulting in insufficient oil film.**

Fig. 5-27 Disassembly Tool for Piston Ring

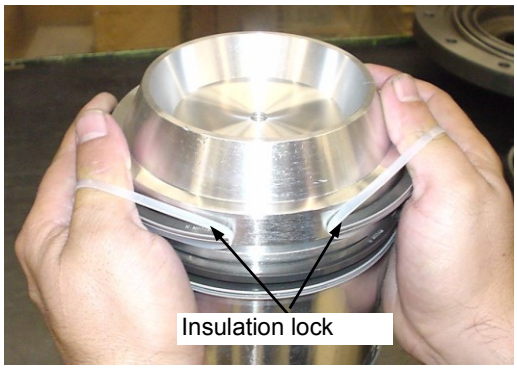

Fig. 5-28 Insulation Lock

5.5.2.11 Cover Plate

WARNING

- **Heavy object. Use the assistance, of 2 or more workers, for the removal of the cover plate.**

1. Undo the upper center bolts (2 pcs.) securing the cover plate, and insert the safety bolts.

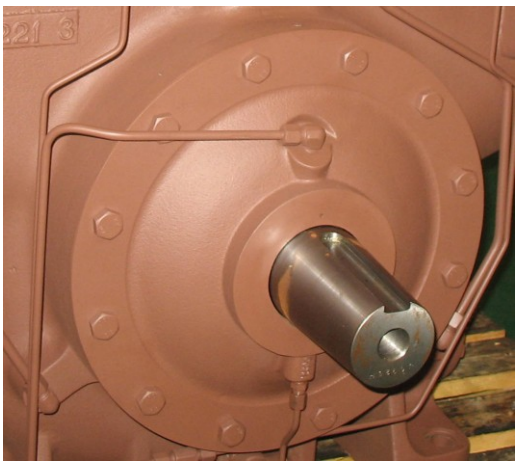

Fig. 5-29 Cover Plate

2. Remove all the cover plate bolts except two bolts mounted at symmetrically opposed positions.

3. Loosen the remaining bolts alternately. The gasket may stick to the cover plate. Easy disengagement is obtained with light taps on the cover plate flange with a hammer after slightly loosening the bolts. The internal structure functions as an oil reservoir, which may have a good deal of oil left in it. An oil pan may be necessary and placed under the cover plate before the cover plate removal.

4. Make sure to pull out the cover plate perpendicular to the crankshaft.
The O-ring, which aids in the storage of oil in the floating seat and seal housing, is embedded in the cover plate (see Fig. 5-30). The cover plate is also equipped with the oil release pipe that lets oil out of the seal housing.

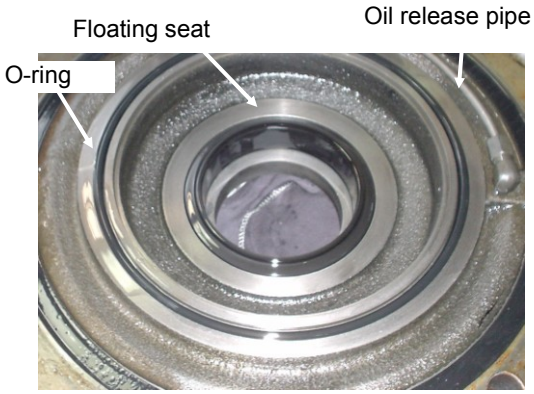

Fig. 5-30 Assembly of the Floating Seat

CAUTION

- **The floating seat is a carbon and is extremely fragile. Exercise caution when handling it. Potential damage to the floating seat includes scratching and chipping can occur if it comes into contact with the shaft during the removal of the cover plate.**

5.5.2.12 Shaft Seal

The shaft seal is embedded in the inside of the cover plate. The shaft seal is comprised of the sealing ASSY (rotor ring) and the floating seat (securing ring) in the cover plate. Refer to Fig. 2-9.

1. The floating seat is secured in the cover plate with two O-rings. The floating seat is designed to come off if pulled towards you

Fig. 5-31 Assembly of the Floating Seat

2. The shaft seal ring is attached to the drive collar ASSY with an O-ring.
The drive collar ASSY is secured to the crankshaft with three set screws.
To remove the drive collar ASSY, undo the three set screws as shown in Fig. 5-32. The drive collar ASSY, which is attached to the crankshaft with an O-ring, is to be removed along with the shaft seal ring if pulled toward you with your hands.

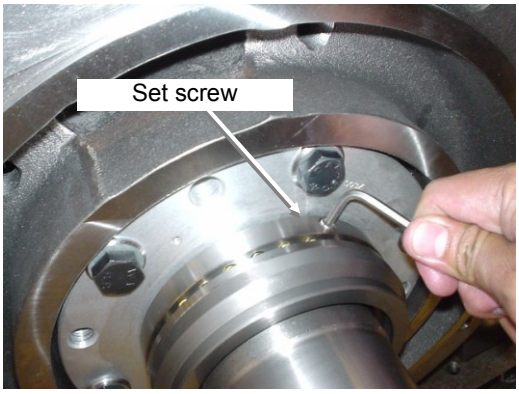

Fig. 5-32 Loosening of the Set Screw

3. Make sure to keep the removed shaft seal together in a set. Keep the sliding surface of the floating seat and shaft seal ring free of dust or debris.

Fig. 5-33 Floating Seat

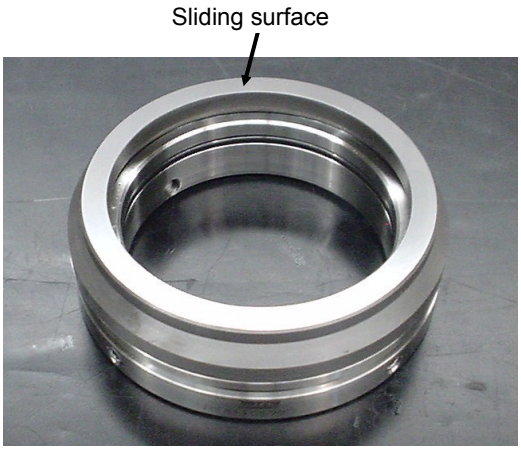

Fig. 5-34 Shaft Seal Ring Assembly

Fig. 5-35 Drive Collar Assembly (Left) and Shaft Seal Ring (Right)

5.5.2.13 Oil Pump

The oil pump must not be disassembled

1. Record the direction of the rotation arrow prior to removing the oil pump.
2. Undo the oil pump bolt, and insert the M10 bolt into the specified screw hole. With the gasket off, remove the M10 bolt. Be sure to remove the O-ring from the main bearing head.

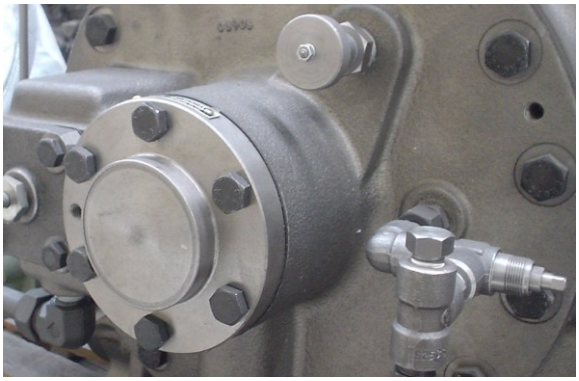

Fig. 5-36 Oil Pump

5.5.2.14 Drag Crank

The drag crank is located at the end of the crankshaft, which comes into view when the oil pump is removed. (see Fig. 5-37).
The drag crank pin is in the crankshaft, not secured, which permits its easy removal if pulled towards you.

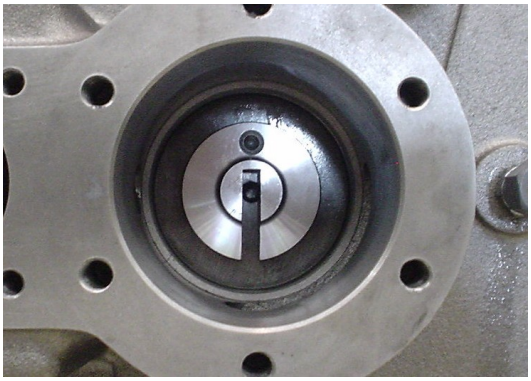

Fig. 5-37 Drag Crank

5.5.2.15 Main Bearing Head

WARNING

- **Heavy object. Use the assistance, of 4 or more workers, for the removal of the main bearing head.**

1. If applicable, disconnect the piping to the oil pressure switch and the oil pressure gauge. Potential damage to the main bearing head may occur during its assembly and disassembly if the oil pressure indicator remains mounted..

2. Undo the hex head cap screw.

【POINT】

- If the gasket sticks to the main bearing head, push the releasing bolt in the corresponding holes on the main bearing head flange and remove the gasket.

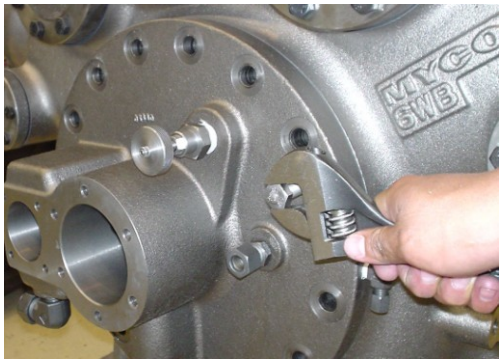

Fig. 5-38 Main Bearing Head

3. Pull the main bearing head towards you to remove.
The crankshaft remains in the main bearing head after the insert of the main bearing head is removed. The weight of the main bearing head will be over the crankshaft, Make sure to pull out the main bearing head in one movement.

【POINT】

- The crankshaft may be pulled out once the main bearing head is removed. Pull out the main bearing head only.

5.5.2.16 Main Bearing

The main bearing is secured in the inside of the main bearing head with its pin.

1. Undo the main bearing pin, and remove the main bearing as shown in Fig. 5-39.

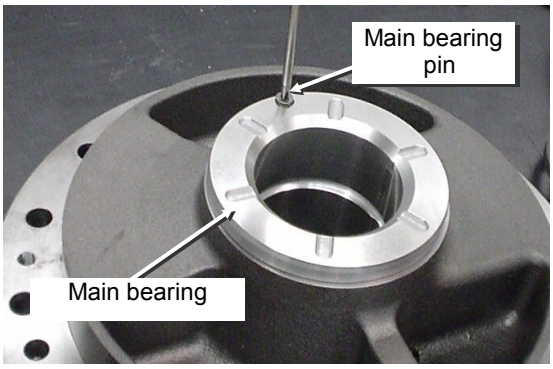

Fig. 5-39 Main Bearing Head

5.5.2.17 Crankshaft

WARNING

- **Heavy object. Use the assistance, of 4 or more workers, for the removal of the crankshaft.**

CAUTION

- **The crankshaft is configured to be pulled out from the oil pump side, different from the WB Series.**

1. Wrap a cloth around the crankshaft journals to prevent it from getting scratched during the crankshaft disassembly.

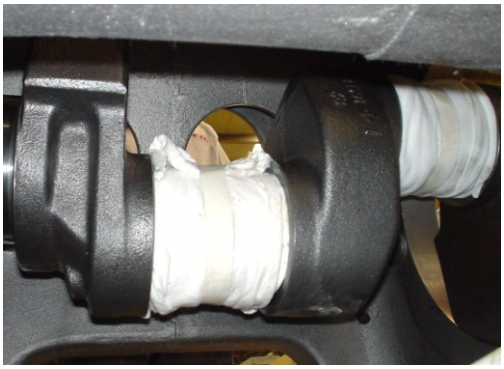

Fig. 5-40 Protection of the Crankshaft

2. The crankshaft is retained cantilevered with the thrust bearing. To remove the crankshaft, insert a block of wood through the hand hole and give a gradual pull to the crankshaft out of the crankcase with its weight supported.

【POINT】

- Potential damage will occur to the thrust bearing metal if the crankshaft is tilted before it being completely removed from the thrust bearing. Make sure to keep the crankshaft straight until its end is completely pulled out of the thrust bearing.

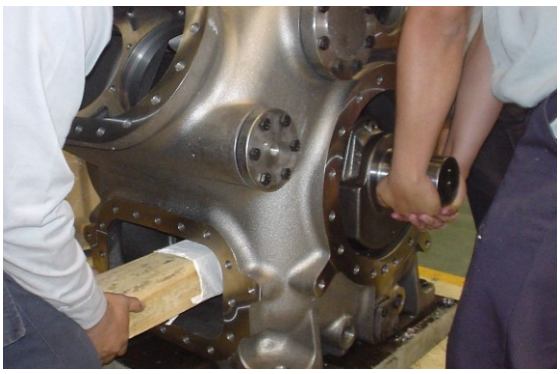

Fig. 5-41 Removal of the Crankshaft

3. With a BB specification (WBH-BB), the crankshaft is recessed on its driving side thrust end face for placing of the thrust roller bearing. The thrust roller inner ring and roller ring are pulled out upon removal of the crankshaft. The inner ring and roller ring are to be removed from the crankshaft if pulled towards you.

CAUTION

- **In the case of a BB type thrust bearing, the replacement of the thrust roller bearing requires a prior removal of the crankshaft. With the crankshaft removed from the oil pump side (suction side), replace the thrust roller bearing.**

5.5.2.18 Thrust Bearing

The thrust bearing is secured to the crankcase with the thrust bearing bolts.

1. Undo all the bolts.

2. Insert the releasing bolts (2 pcs.) in the corresponding holes on the thrust bearing flange and remove the gasket, as shown in Fig. 5-42. With the thrust bearing loosened, pull it toward you to remove.

【POINT】

- A two-stage compressor (42WBHE, 62WBHE) is outfitted with a thrust bearing secured with an O-ring fitted into its outer groove. The thrust bearing requires a bit of force for its removal.

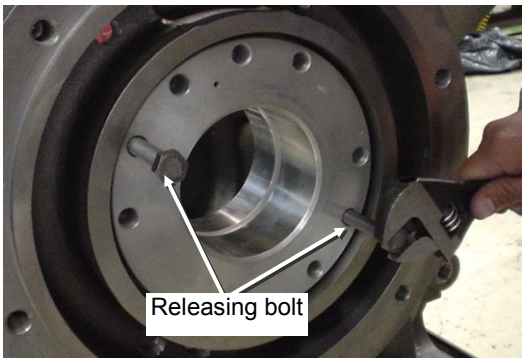

Fig. 5-42 Main Bearing Head

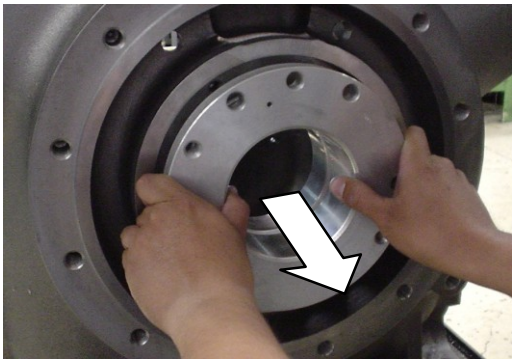

Fig. 5-43 Removal of the Thrust Bearing

3. With a BB type specification (WBHE－BB) the thrust bearing is recessed on the crankcase side outer radius for placing the thrust rolling bearing.
The housing washer of the thrust roller bearing remains in the recessed part of the crankcase side inner radius after the thrust bearing has been removed. Pull the housing washer of the thrust roller bearing towards you through the hand hole to remove it.

5.5.2.19 Removal of Strainers

The strainers to be removed are listed below:

- Cuno-filter ASSY
- Oil strainer screen
- Scale trap screen
- Suction strainer

■ Cuno-filter ASSY

The Cuno-filter ASSY is secured to the main bearing head with the bolts.

1. With the bolts undone, pull the Cuno-filter ASSY towards you to remove it.

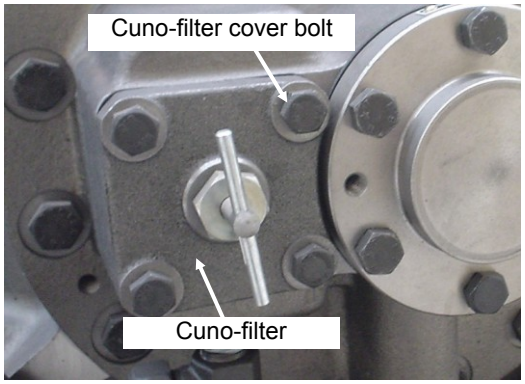

Fig. 5-44 Cuno-filter

CAUTION

- **The Cuno-filter contains a filter made of laminated thin metal and an ultrathin metal scraper to remove foreign objects from the outer radius. Keep the Cuno-filter free from contact with any object when assembling and disassembling it.**
  Do not disassemble the Cuno-filter assembly.

■ Oil Strainer Screen

The oil strainer screen is pushed in the oil strainer cover as shown in Fig. 5-45.

1. Undo the oil strainer cover bolts.

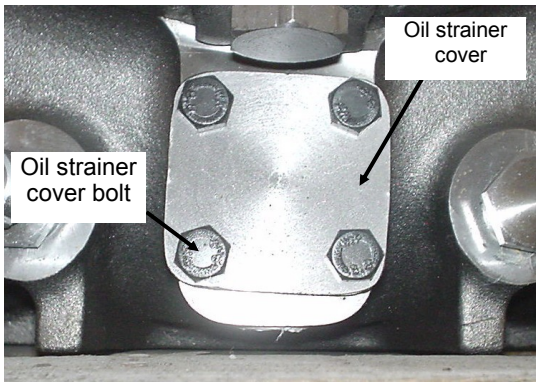

Fig. 5-45 Oil Strainer Cover

2. Pull out the oil strainer cover and the oil strainer screen.

【POINT】

- The oil strainer screen is an integral part of the oil strainer cover, which enables a simultaneous removal.

■ Scale Trap Screen

The scale trap screen is fitted to the models listed below: **6WBHE, 8WBHE, 42WBHE, 62WBHE**

1. Undo the scale trap cover bolts (8 pcs.)

2. Remove the scale trap cover.

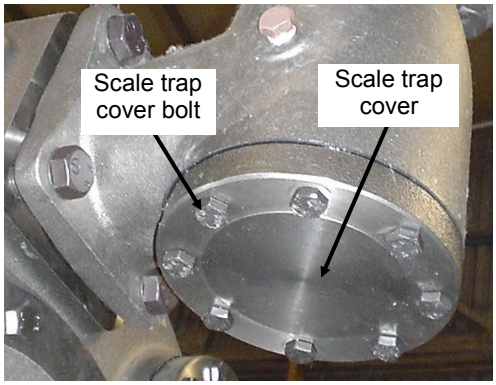

Fig. 5-46 Scale Trap Cover

3. Pull out the scale trap screen.

【POINT】

- The scale trap screen is held in with the scale trap cover. An easy pullout of the scale trap screen is attained upon removal of the scale trap cover.

CAUTION

- **The factory-shipped compressor configuration includes a fine screen (fabric bag) placed in the scale trap screen to keep the compressor from getting damaged by foreign objects associated with initial system test run. The wearing down of the fine screen will appear due to prolonged use. Ensure that the fine screen is always removed after the first test run.**

■ Suction Strainer

The suction strainer is fitted to the models listed below: 4WBHE, 6WBHE, 8WBHE/8WBHEH, 6WBHEU/8WBHEU/8WBHEHU

The suction strainer is retained in the crankcase with the spring.

1. Undo the suction strainer cover bolts.

2. Remove the suction strainer cover.

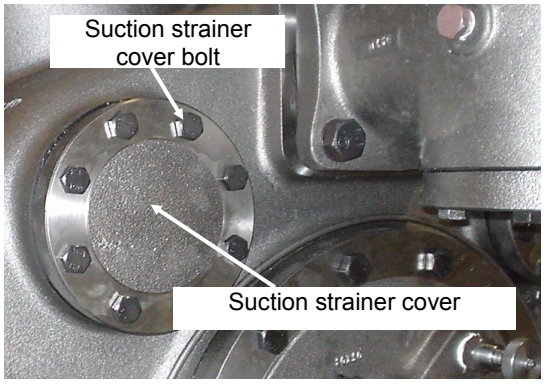

Fig. 5-47 Suction Strainer Cover

3. Pull out the suction strainer spring and suction strainer.

【POINT】

- With the model 4WBHE, the fine screen (fabric bag) is attached to the inside of the suction strainer with the suction strainer lock spring because no scale trap is fitted.

CAUTION

- **The wearing down of the fine screen will appear after prolonged use. Ensure that the fine screen is always removed after the first test run.**

5.6 Assembly

WARNING

- Only MYCOM genuine replacement parts are available. Failure to use the genuine parts may lead to not only damage to the compressor and equipment during operation but potential electric shock attributed to a ground fault.

CAUTION

- Always use the proper tools when assembling the compressor. Potential personal injury may occur if disassembly is attempted with a worn-out or damaged tool.
- Exercise due caution when handling heavy objects. Be sure to use an auxiliary tool such as a safety bolt when handling heavy objects. Potential personal injury may occur if disregarded.

CAUTION

- See Chapter "7.4 Specification List of Suction Valve Plates and Discharge Valve Plates.
- When replacing the parts, ensure that new replacement parts are the right model prior to assembly.
- If you notice any slight flaws detected on parts or rust is formed on replacement parts due to prolonged storage, sand down flaws and rust with sandpaper (#800 to 1200).
- Keep assembly parts clean through cleaning with light oil.
- Wipe cleaned parts with a compressed-air cloth. Do not use a chemical fiber or wool cloth that may leave lint.
- Make sure the lubricator is replenished with new lubricating oils. Be sure to apply oil to the sliding surface immediately before assembling the parts.
- Ensure the gaskets have lubricating oils on its both sides.
- A lubrication hole may be assigned to some gaskets, in addition to the bolt hole. With the lubrication hole located, ensure that the oiling system remains unobstructed with the gasket when placing the gasket.
- Always use clean tools. Do not use worn out or damaged tools from prolonged use. There is potential damage to the parts to be assembled if this is disregarded.
- Slightly tighten all the bolts, and tighten all the bolts at symmetrically opposed positions to their torque specified in "5.6.1 List of Tightening Bolts". Make sure to tighten the bolts clockwise again to their prescribed values to fasten them securely.

5.6.1 List of Tightening Bolts

The bolts used in WBHE Series are to be tightened to the specified torque defined in "Table 5-8 List of Tightening Torque for Bolts and Nuts".

Table 5-8 List of Tightening Torque for Bolts and Nuts

No.	Bolt	Size	Tightening Torque	
			N•m	kgf•cm
1	Pulley hub set bolt	M27×L50 (P1.5)	380	3800
2	Hex head cap screw (long)	M16×L110	120	1200
3	Hex head cap screw (short)	M16×L55	120	1200
4	Cover plate bolt	M16×L55	120	1200
5	Hand hole cover bolt	M16×L55	120	1200
6	Head cover bolt	M16×L45	120	1200
7	Discharge valve cage guide bolt	M12×L60 (P1.25)	80	800
8	Suction end cover bolt	M12×L40	80	800
9	Scale trap cover bolt	M12×L40	80	800
10	Thrust bearing bolt	M12×L40	80	800
11	Oil pump bolt	M12×L35 (L40)	80	800
12	Unloader piston cover bolt	M10×L35	40	400
13	Oil strainer cover bolt	M10×L30	40	400
14	Cuno-filter cover bolt	M10×L30	40	400
15	Oil sight glass gland bolt	M10×L30	40	400
16	Discharge valve seat nut (No.1)	5/8"	120	1200
17	Discharge valve seat nut (No.2)	5/8"	80	800
18	Connecting rod nut (No.1)	1/2"	120	1200
19	Connecting rod nut (No.2)	1/2"	80	800

5.6.2 Work Flow

Re-assembly must be performed in reverse order of disassembly. See "5.5.2 Flow of Work" to proceed with re-assembly, following the precautions defined.

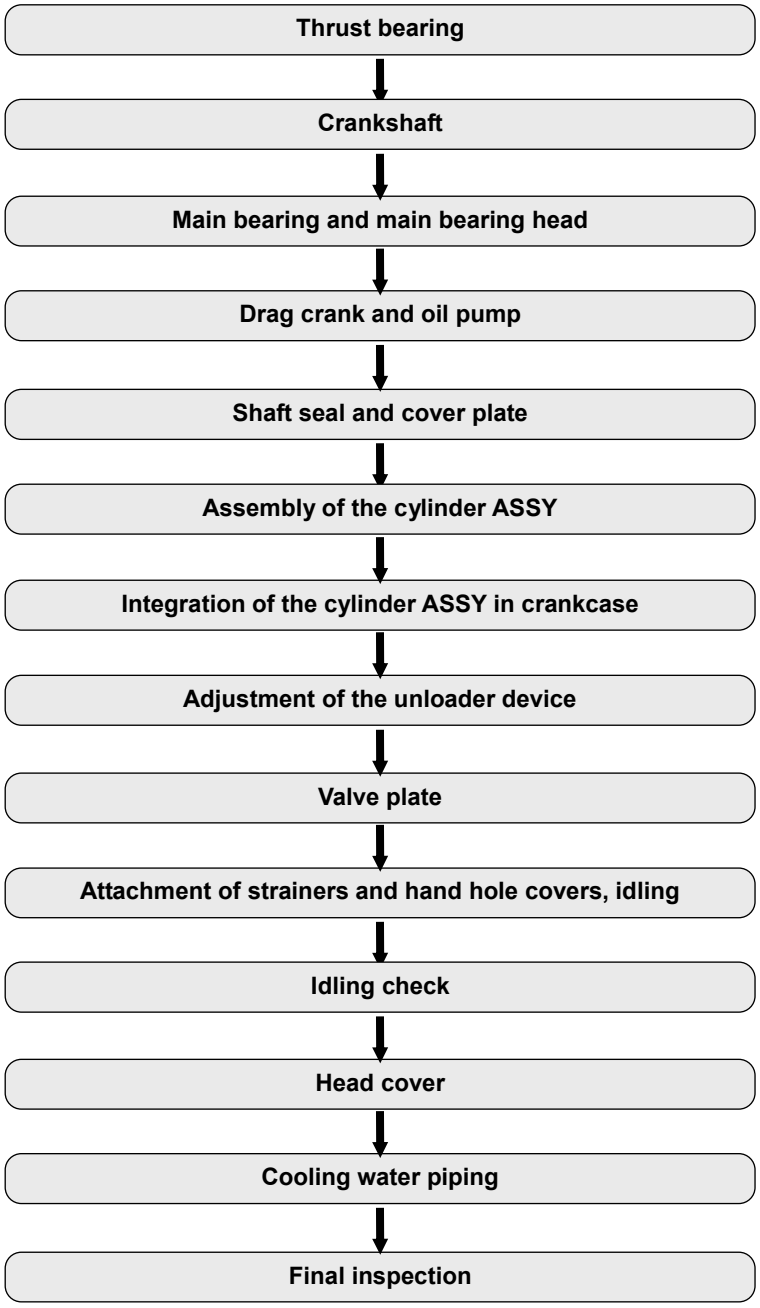

Fig. 5-48 Work Flow

5.6.2.1 Thrust Bearing

1. With the lubrication hole facing up, attach the thrust bearing to the crankcase. Align the two lubrication grooves on the sliding surface at a position that forms an angle of 45° between them. In a two-stage compressor, be sure to attach the thrust bearing O-ring to the two outer grooves each.

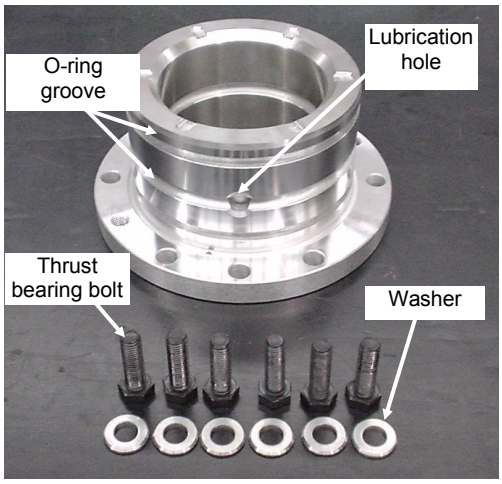

Fig. 5-49 Thrust Bearing

2. Attach the washer to the thrust bearing bolt, and tighten the bolt according to specification

Fig. 5-50 Attachment of Thrust Bearing

3. A BB type thrust bearing has been machined to house the thrust roller bearing, as shown in Fig. 5-51. When attaching the BB type thrust bearing, be sure to first place the thrust roller inner ring and roller ring on the inside of the crankshaft.

Fig. 5-51 BB Type Thrust Bearing

Fig. 5-52 BB Type Thrust Roller Bearing

5.6.2.2 Crankshaft

⚠ WARNING

- **Heavy object. Use the assistance, of 4 or more workers, for the assembly of the crankshaft.**

1. With the crankshaft journals wrapped in a cloth for protection, insert it into the crankcase. (see Fig. 5-53 and Fig. 5-54).

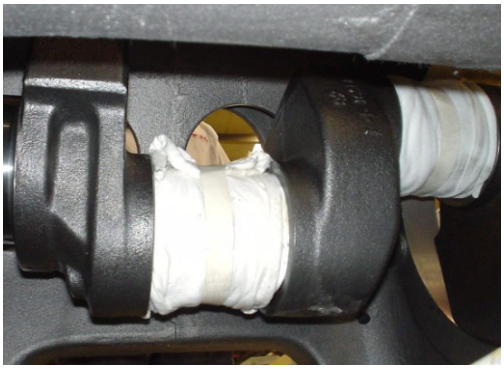

Fig. 5-53 Protection of the Crankshaft Pin

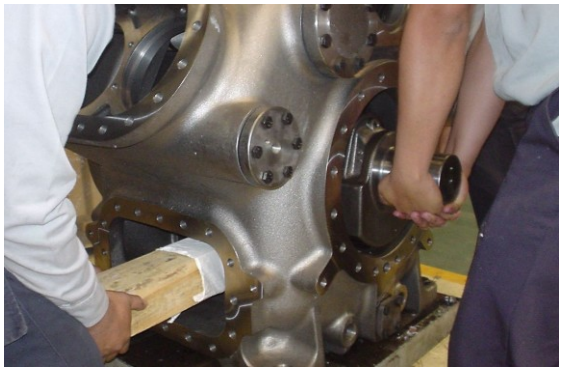

Fig. 5-54 Assembly of the Crankshaft

【POINT】

- Be sure to insert the crankshaft into the thrust bearing in one movement. Check the inside of the crankcase for pieces of wood after assembly to ensure that nothing remains in the crankcase.

2. A BB type crankshaft has been machined to allow for the thrust roller bearing inner ring, as shown in Figure Fig. 5-56. With the thrust roller bearing inner ring attached to the machined part of the crankshaft, insert the crankshaft into the thrust bearing. Double check

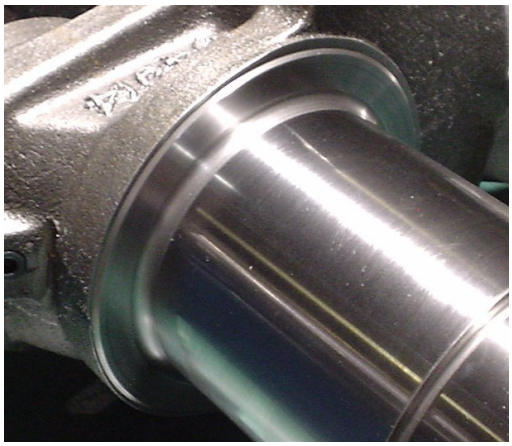

Fig. 5-55 Standard Crankshaft Thrust Bearing Surface

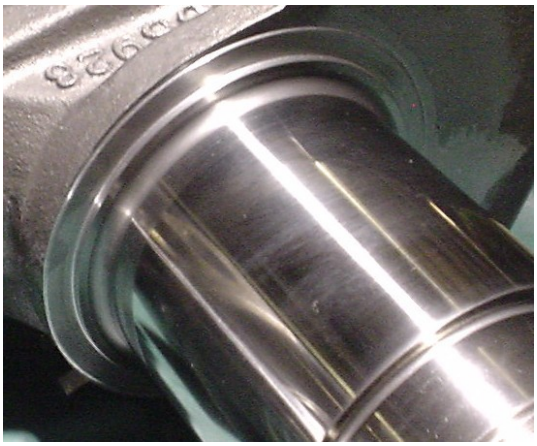

Fig. 5-56 BB Specification Crankshaft Thrust Rolling Bearing Surface

5.6.2.3 Main Bearing and Main Bearing Head

WARNING

- **Heavy object. Use the assistance of 4 or more workers, for the assembly of the main bearing head.**

1. With the main bearing in the main bearing head as shown in Fig. 5-58, attach the toothed lock washer to the main bearing and tighten it securely according to specification
With a two-stage compressor, attach the main bearing O-ring to each of the two outer grooves.

- .

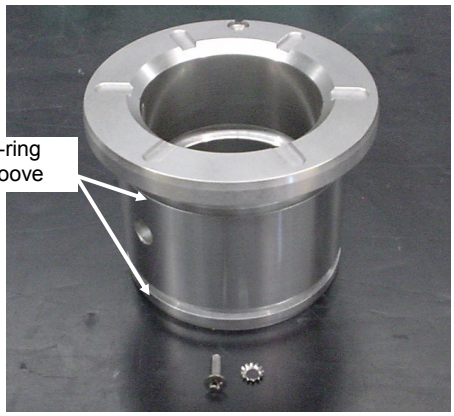

Fig. 5-57 Main Bearing

Fig. 5-58 Insertion of the Main Bearing

2. Attach the main bearing head gasket to the main bearing head. Make sure the two lubrication holes on the main bearing head are aligned with those on the main bearing head gasket.

3. Attach the main bearing head to the crankcase.

【POINT】

- Insert the main bearing of the main bearing head into the crankshaft. Move it until the mating part comes into contact with the crankcase. Fit the main bearing head mating side into the crankcase with the weight of the main bearing head supported.

CAUTION

- **Before bringing the main bearing head into close contact with the crankcase, ensure again that the two lubrication holes on the main bearing head are aligned with those on the crankcase**

5.6.2.4 Drag Crank and Oil Pump

1. Rotate the crankshaft to allow the drag crank mounting pin hole on the crankshaft end to be at the uppermost part. With the drag crank mounting pin inserted (see Fig. 5-59), attach the drag crank as presented in Fig. 5-60 and adjust it to center its notch.

Fig. 5-59 Drag Crank Mounting Pin

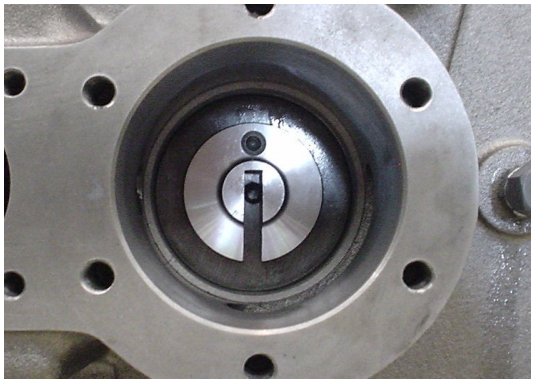

Fig. 5-60 Drag Crank

2. Attach the oil pump O-ring to the main bearing head.
The oil pump gasket is to be attached to the oil pump.

3. If the direction of the oil pump shaft notch aligns with that of the groove on the drag crank, insert the oil pump. If the insertion of the oil pump shaft into the groove on the drag crank is not made Remove the oil pump to readjust the positions, and retry inserting the oil pump. Do not tighten the bolt forcefully.

4. As shown in Fig. 5-61, rotate the oil pump until the rotation arrow indicating plate comes to top.
If the direction of the arrow corresponds with that of compressor rotation, insert and tighten the oil pump bolt according to specifications.
If the arrow on the indicating plate shows a reverse direction, give a further 180°-rotation to the oil pump to allow the direction of the arrow to correspond with that of compressor rotation.

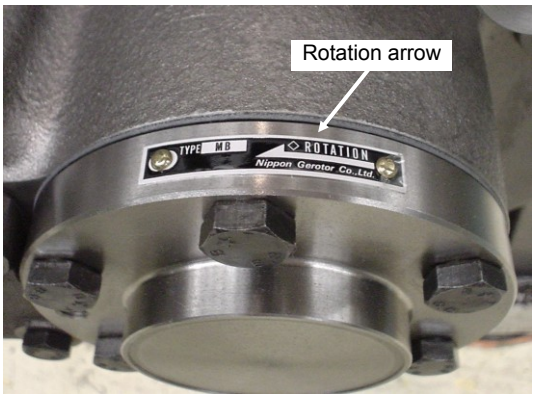

Fig. 5-61 Oil Pump Rotation Arrow

CAUTION

- **The oil pump shaft will come out of the drag crank when the oil pump is pulled by 10 mm or more for changing the rotating direction of the oil pump. Pull out the oil pump by 1 or 2 mm then rotate it by 180°, or change the direction following the above step.**
  Make sure the pressure in the crankcase in the compressor is atmospheric pressure before changing the rotating direction with the oil pump.

5.6.2.5 Shaft Seal and Cover Plate

WARNING

- **Heavy object. Use the assistance of 2 or more workers, for the assembly of the cover plate.**

1. Attach the O-ring to the drive collar ASSY inner radius.

2. With the O-ring attached to the shaft seal ring, attach it to the drive collar ASSY.
The shaft seal ring ASSY is completed as shown in Fig. 5-62. Check the spring for tension by pushing it from above. If the check finds that the spring bounces up and down, normal spring tension is assured.

Fig. 5-62 Shaft Seal Ring ASSY

3. Rotate the crankshaft to allow its locking ball to be in the 12 o'clock position.

4. Attach the shaft seal ring ASSY to the crankshaft, keep the drive collar notch in the 12 o'clock position so that the locking ball to fits in the notch (see Fig. 5-63).

Fig. 5-63 Attachment of Shaft Seal Ring ASSY to Crankshaft

Tighten the set screws (3 pcs.) to secure the drive collar, as presented in Fig. 5-64.
Make sure to provide the proper tightening to the set screws.

Fig. 5-64 Tightening of Set Screw

5. Attach the O-rings (2 pcs.) to the carbon ring (see Fig. 5-65). Insert the Carbon ring with O-rings into the cover plate (see Fig. 5-66).

Fig. 5-65 Floating Seat

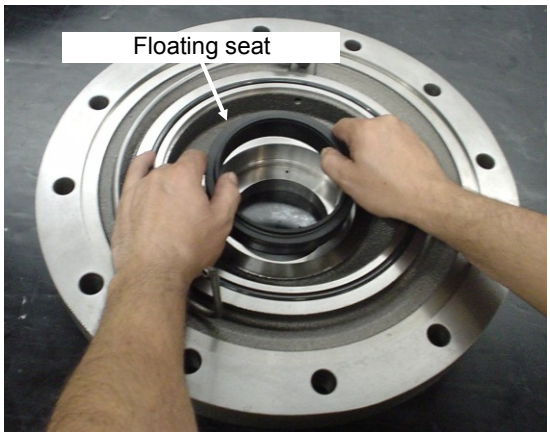

Fig. 5-66 Insertion of Floating Seat

6. Attach the O-ring and gasket to the cover plate, which then can be mounted to the crankcase (see Fig. 5-67).

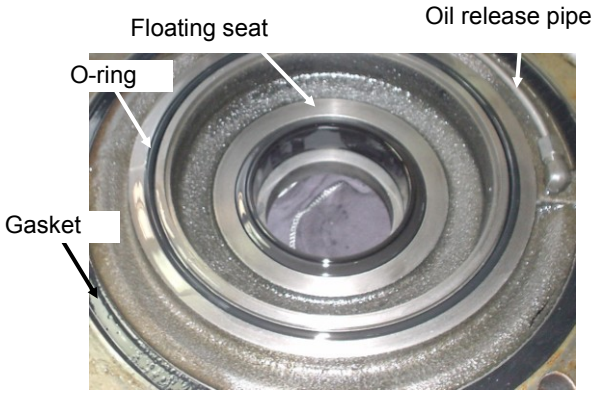

Fig. 5-67 Shaft Seal Ring ASSY

7. Push the safety bolts (2 pcs.) in the corresponding screw holes on the top of the crankcase.

【POINT】

- Use of the safety bolts as a guide facilitates the attachment of the seal cover.

8. Apply lubricant to the sliding surface of the mechanical seals (Carbon ring and shaft seal ring). Attach the cover plate, keeping the O-ring and gasket shown in Fig. 5-67 in the cover plate. Make sure the cover plate is in a direction perpendicular to the crankshaft. Place the cover plate on the crankcase while preventing the Carbon ring from touching the crankshaft.

【POINT】

- The cover plate is equipped with the oil release pipe that lets oil out of the seal housing (see Fig. 5-67). The outlet of the oil release pipe should be inserted into the equalizing hole at the bottom of the crankcase, as shown in Fig. 5-68.

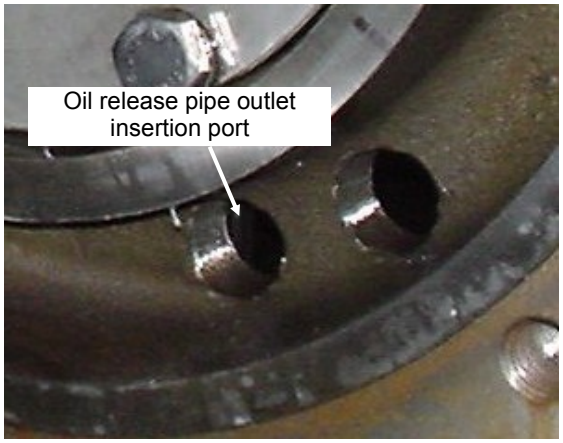

Fig. 5-68 Crankcase Equalizing Hole

9. Push in 2 cover plate bolts at symmetrically opposed positions, and provide constant tightening until the gap is closed between the crankcase and cover plate.
With the cover plate fitted securely to the crankcase, push in and tighten the rest of the bolts.

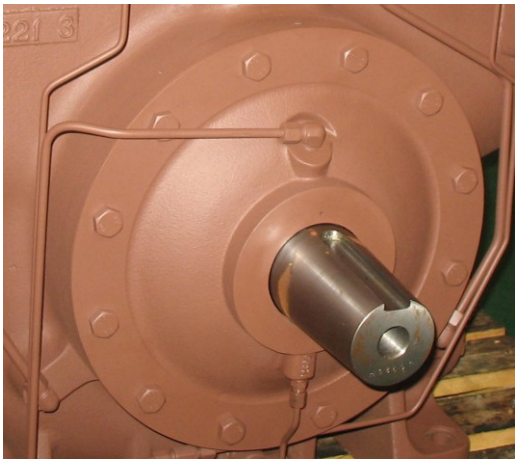

Fig. 5-69 Assembly of Cover Plate

5.6.2.6 Assembly of the Cylinder ASSY (Three Ring Specification)

■ Piston and Piston Ring

1. See Fig. 5-70 or Fig. 5-71 to complete the attachment of the piston ring to the piston.

Fig. 5-70 With Piston Ring Mounting Tool

Fig. 5-71 With Insulation Lock

2. Attach the oil ring (1st) (c) and piston ring (2nd) (b) so that the side with a marking (R mark) (e) faces upwards and finally the piston ring 3rd (a)

CAUTION

- **The R stamp faces upwards. Be careful not to attach them upside down. This will cause oil problems**
- **Avoid expanding the piston ring joint unnecessarily as with removal of the cylinder ASSY.**

3. Attach the oil ring (1st) (c) so that the notch (h) is positioned to the opposite side of the coil ring (d) adjustment position (i).

4. Attach the piston ring (2nd) (b), piston ring (3rd) (a), and oil ring (1st) (c) by displacing their notches (f), (g), and (h) for 120–degree so that they are not overlapped.

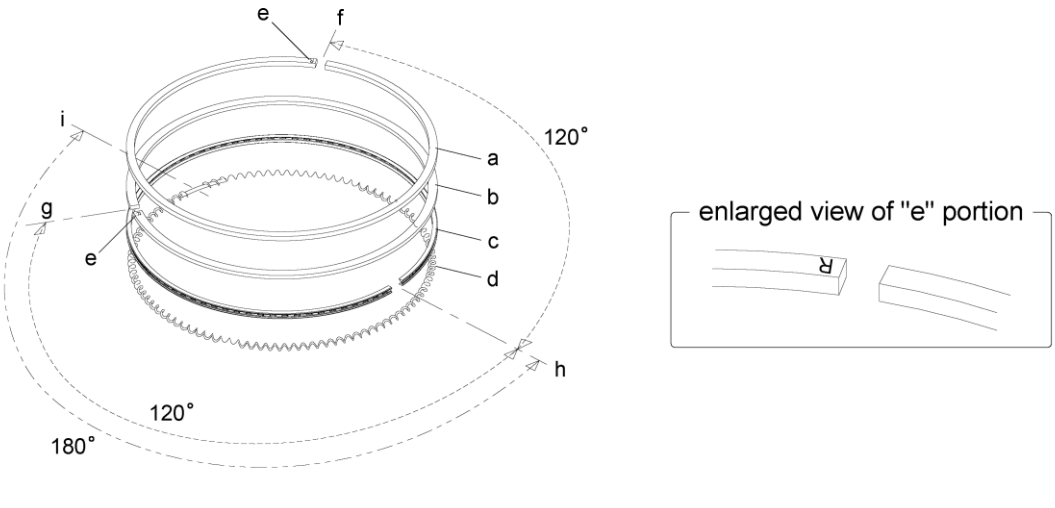

■ Cylinder Sleeve

1. See "4.3 Capacity Control Order" to make sure that the correct rightward or leftward sloping of the cam ring is matched to each cylinder sleeve. The cylinder sleeves have a number stamped on them which correspond with the same number on the compressor casing.
Each set of cam rings mounted under the same head cover should slope in the same direction. Fig. 5-72 shows an example of incorrect cam ring mounting.

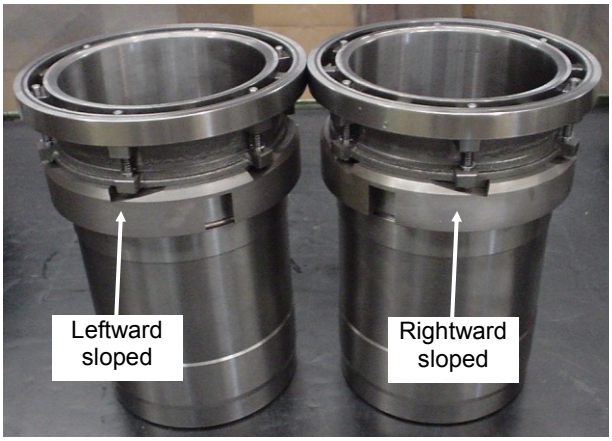

Fig. 5-72 Example of Incorrect Cam Ring Mounting

■ Pistons and Connecting Rod

The connecting rod bushing comes in two types: standard type (Fig. 5-73) and two-stage compressor type (Fig. 5-74). The needle bushing high stage connecting rod small end is used in the two-stage compressor.

Fig. 5-73 Standard Connecting Rod
Small End Bush

Fig. 5-74 High stage Connecting Rod
Small End Needle Bearing

The piston is assigned a cylinder number on its concave head. The sequence number (see Fig. 5-75) and cylinder number (see Fig. 5-76) are inscribed on the connecting rod. The piston should be coupled to the corresponding connecting rods.

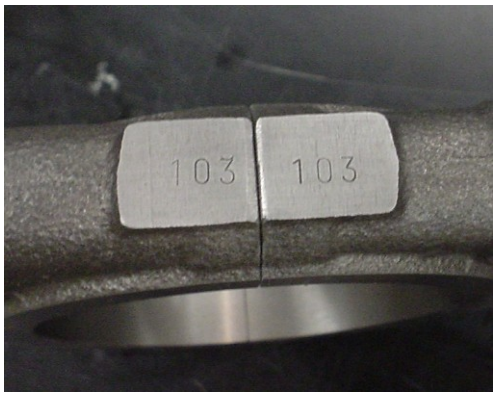

Fig. 5-75 Sequence Number

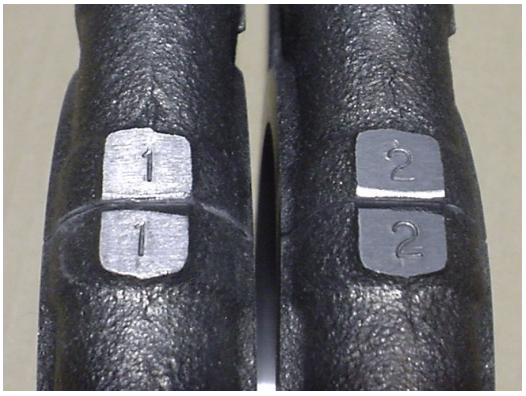

Fig. 5-76 Cylinder Number

■ Mounting of the Piston ASSY

⚠ CAUTION

- **Potential personal injury may occur if piston and cylinder sleeve are not held correctly. Lift the piston assembly and support the cylinder sleeve during moving.**
- **Always follow the procedures below for assembling the piston assembly in the cylinder sleeve.**

1. Use the piston ring compressor tool (fig 5-77) so that it collapses the rings when tightened

Fig. 5-77

2. Apply oil on the piston and fixture.

Fig. 5-78

3. Level the top end of the tool with the top end of the piston, and tighten the fitting.

CAUTION

- **Do not excessively tighten as the piston will not be able to be moved into position**

Fig. 5-79

【POINT】

- Tighten the tool so as to allow the fixture to turn.

4. Insert the piston from the top of the cylinder sleeve, and place the fixture on the sleeve's upper surface.

【POINT】

- Do not attach the rod.
- Use the Piston pin hole to help when pulling the piston though the Cylinder.

Fig. 5-80

5. Tap the eyebolt, and push the piston into the sleeve.

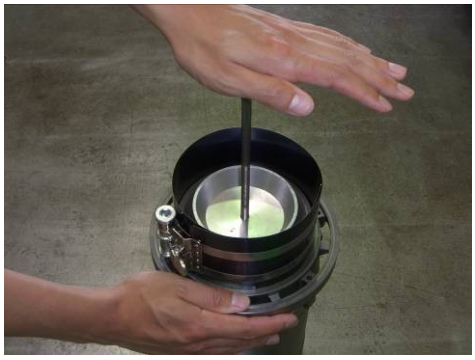

Fig. 5-81

6. Turn over and pull up the Piston so that the piston pin can be inserted through the piston pin hole. Insert the connecting rod into the piston, keeping its small end aligned with the piston pin hole. With the piston pin inserted through the piston pin hole, couple the piston to the connecting rod.

-

Fig. 5-82

7. With the piston pin inserted, push the piston pin lock springs in the grooves located at both ends of the piston pin hole.
Make sure the piston pin lock springs fit into the piston pin hole grooves.

8. Attach the bearing halves to the connecting rod large end.

9. A set of bearing halves has an upper half and lower half: With the upper type the lubrication hole and groove are located in the center, with the lower type has no lubrication hole or groove.
Make sure to attach the upper bearing halves to the connecting rod and lower bearing halves to the connecting rod cap.

10. Push down on the piston until its head reaches the bottom.
The cylinder ASSY is now ready to be mounted to the crankcase (see Fig. 5-83).

Fig. 5-83 Cylinder Assembly

5.6.2.7 Mounting of the Cylinder ASSY in Crankcase

Re-assembly of the unloader device in the crankcase must be performed in reverse order of its disassembly, seeing "5.5.2.5 Unloader Device".

1. Keep the notch of the unloader device push rod directly on the center line of the cylinder mounting hole, as shown in Fig. 5-84. If the notch is off the center line of the cylinder mounting hole, undo the allen screw within the unloader cover and screw in the eyebolt to re position the push rod.(see Fig. 5-85).

【POINT】

- The position of the unloader device push rod (directly center) varies with model and cylinder type.

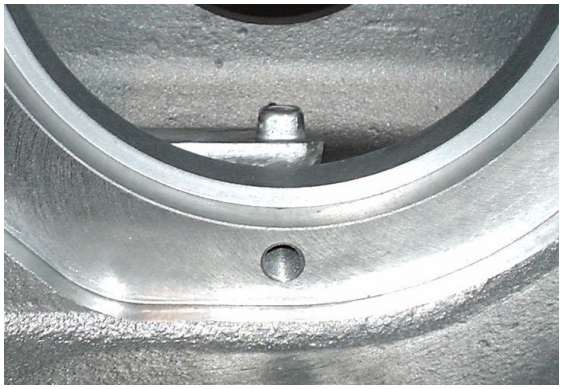

Fig. 5-84 Notch of Unloader Device Push Rod (Directly Underneath)

Fig. 5-85 Positioning of Unloader Device Push Rod

2. In a two-stage compressor, attach the cylinder sleeve O-ring to the cylinder hole at the back of the crankcase (see Fig. 5-86).

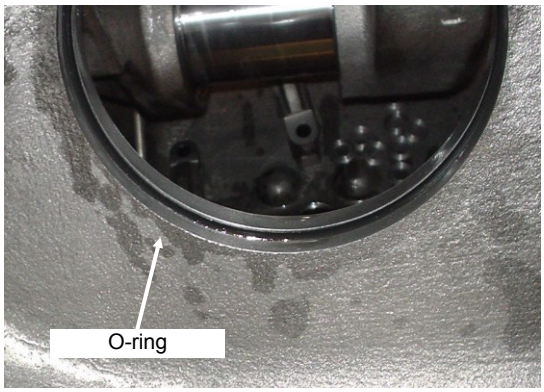

Fig. 5-86 Cylinder Sleeve O-ring

3. Rotate the crankshaft to position the journal to the BDC (bottom dead Center) (lowermost part) of the rotation. As viewed through the cylinder hole on the crankcase, the lubrication holes on the journal are the connection centre of the bearing halves. (see Fig. 5-87).

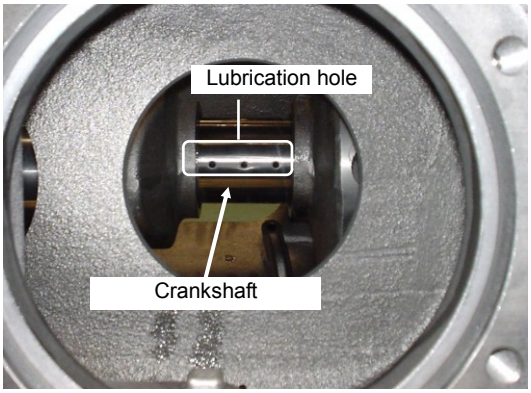

Fig. 5-87 Crank Pin BDC

4. Attach the cylinder sleeve gasket to the back of the cylinder sleeve. The application of lubricating oils in adequate amount allows the cylinder sleeve gasket to stick to the cylinder even if it is turned while inserting the cylinder ASSY.

5. Assemble the connecting rod cap and the connecting rod to the intended cylinder ASSY. Ensure that the 3-digit sequence numbers on the rod and rod cap correspond with each other.

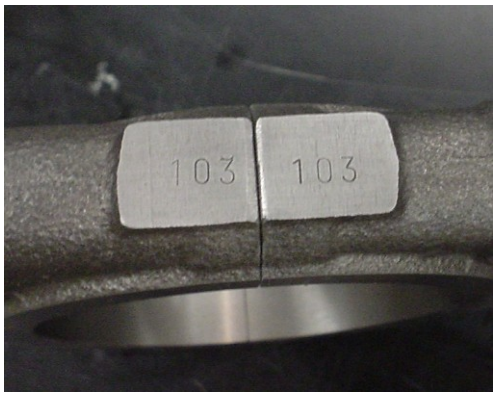

Fig. 5-88 Sequence Number

6. Insert the eyebolt into the screw hole located at the center of the concave part of the piston head, with the cylinder ASSY lying on its side (see Fig. 5-89).

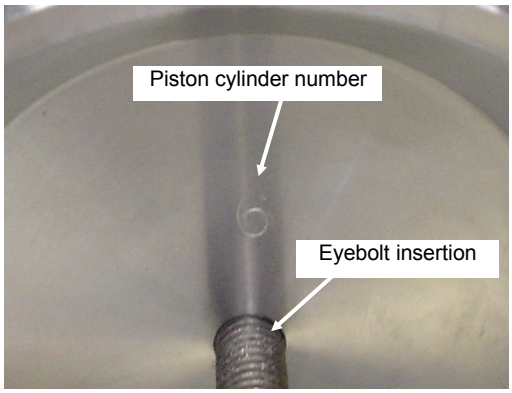

Fig. 5-89 Cylinder Number on the Piston (Cylinder No.6)

7. Recheck the cylinder numbers and slope directions of the cam rings.
Position the cam ring to align it with the notch (see Fig. 5-90) of the unloader device push rod located on the intended cylinder in the crankcase (see Fig. 5-91).
The notch on the retaining ring should be aligned with that on the cam ring as well.

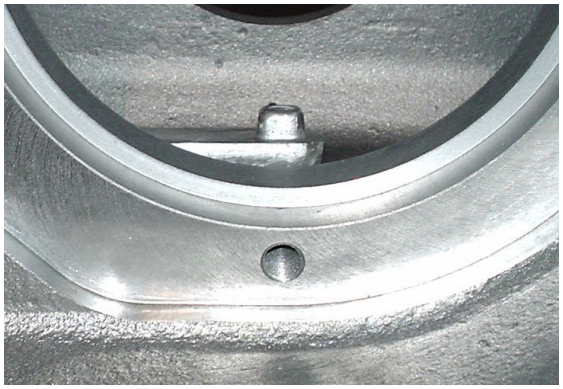

Fig. 5-90 Notch of the Unloader Device Push Rod

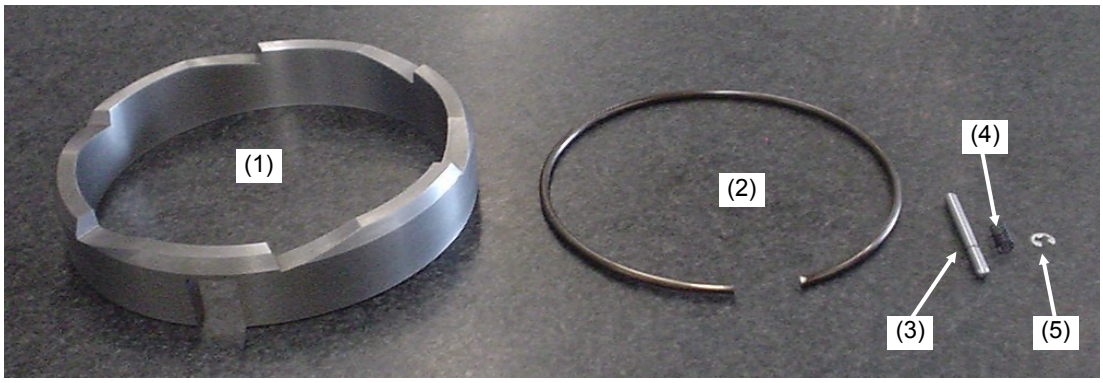

Fig. 5-91 Components for Unloader Device (Cylinder Sleeve Attachment Type)

8. The inserting of the cylinder ASSY in the crankcase must be performed in reverse order of its disassembly.
The cylinder number engraved on the piston is to be on top for the assembly of the cylinder ASSY (see Fig. 5-92).

【POINT】

- The cylinder ASSY when mounted should be tilted due to a cylinder configuration (crankcase structural feature). The connecting rod large end is stamped with a three-digit engraved sequence number at the bottom that is to be mounted to the crank journal.

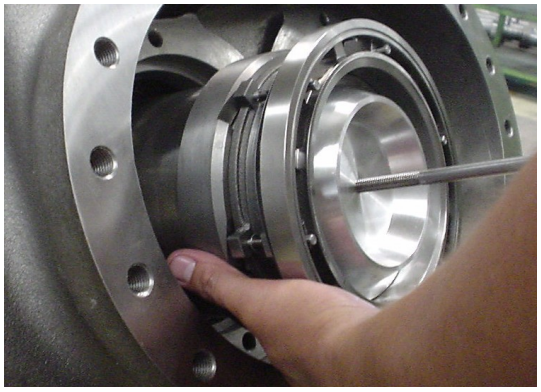

Fig. 5-92Attachment of the Cylinder ASSY in the Crankcase

CAUTION

- **The cylinder ASSY is a heavy object, which requires you to hold it properly to keep the shaft and bearing from getting damaged during assembly.**

【POINT】

- With the connecting rod large end of the cylinder ASSY passed through the hole of the crankcase, place a hand through another cylinder hole in the crankcase to support the cylinder ASSY, this facilitates the assembly.

9. With the cylinder sleeve in the crankcase, keep the connecting rod end in the direction of the crankshaft journal.
Secure the connecting rod end on the journal by a gradual downward push of the piston.

CAUTION

- **Always keep the connecting rod end in the direction of the crankshaft journal when pushing the piston. Potential damage to the journal may occur due to contact with the connecting rod bottom if disregarded.**

10. Insert the connecting rod bolt into the connecting rod.
As shown in Fig. 5-93, ensure that the bolt head notch is aligned with the lock notch on the connecting rod.

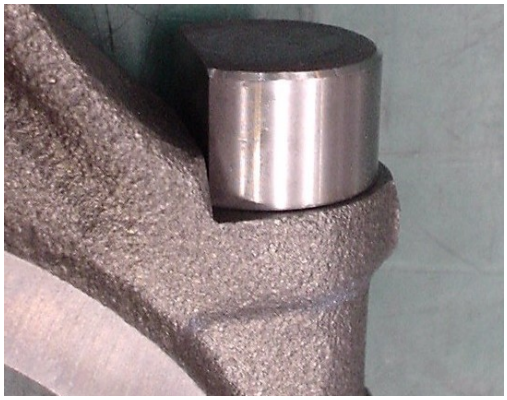

Fig. 5-93 Lock of the Tightening Bolt

11. Attach the connecting rod cap to keep the three-digit sequence numbers on the connecting rod and rod cap in the same direction. (Manually tighten the connecting rod nut to secure the rod cap with the washer attached to the connecting rod bolt.)

CAUTION

- **The connecting rod bolt may come off the lock notch on the connecting rod. Make sure the bolt head notch fits into the lock notch on the connecting rod with the rod cap attached.**

12. Tighten the connecting rod nut on both sides (No.1) alternately, and tighten them to the specified torque. Then (No.2) alternately and tighten them to the specified torque (see Fig. 5-94).

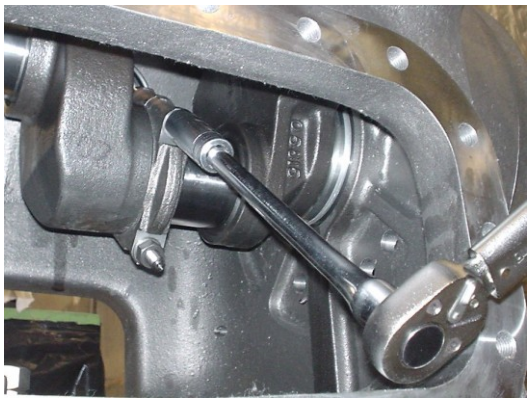

Fig. 5-94 Tightening of Connecting Rod

CAUTION

- **Check that the attached connecting rod moves sideways by holding the connecting rod nut. If the check shows there is no movement in the rod, the rod cap may be attached incorrectly. Otherwise, a rod cap with an incorrect cylinder number may be attached**

13. Mount the cylinders one-by-one. Proceed with the next cylinder upon completion of one cylinder attachment. Rotate the crankshaft to position the crankshaft pin of the intended cylinder ASSY in BDC (lowermost part).

【POINT】

- The cylinder sleeve is pushed out by piston tension if the crankshaft is rotated. Always hold the cylinder sleeve down to keep the sleeve in the fitting when adjusting the crankshaft.

14. Repeat steps 1 to 13 until the attachment of the last cylinder is completed.

15. Make sure the assembly is correct after all the cylinders have been placed.

16. Make sure of a valid three-digit sequence number on the connecting rod through the crankcase hand hole. The mounting of the cylinder ASSY's in the crankcase is now completed.

5.6.2.8 Adjustment of the Unloader Device

A factory-built compressor has cylinder sleeves inscribed with a (Δ) symbol on its flange with the unloader device factory-adjusted (see Fig. 5-95).

A symbol (-) is engraved on the crankcase as a positioning mark. The adjustment of the unloader device is achieved by positioning the symbols (Δ) on the cylinder sleeve in line with the symbol (-) on the crankcase through rotation of the cylinder sleeve.

A new cylinder sleeve is assigned with no positioning mark (Δ) if it is replaced. Adjust the unloader device with respect to the positioning mark (-) on the crankcase.

1. Position the cylinder sleeve lift pin on the left immediately lateral to the positioning mark (-) on the crankcase (see Fig. 5-95).

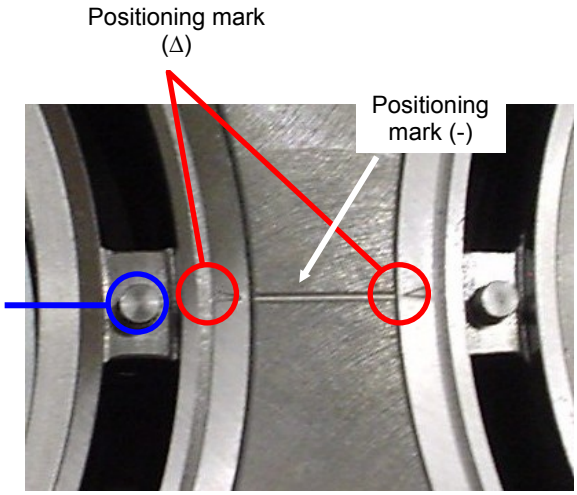

Fig. 5-95 Unloader Positioning Mark

2. Move the lift pin up or down through pushing in or loosening of the adjusting eyebolt, to level the lift pin head with the cylinder sleeve seat (see Fig. 5-96).
   Accurate height adjustment is assured with the use of a ruler, as shown in Fig. 5-97.

Fig. 5-96 Positioning of the Push Rod

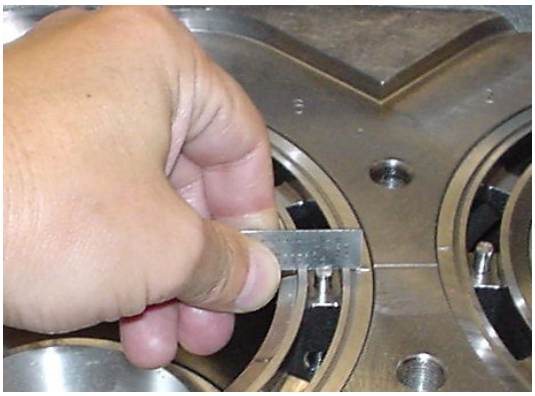

Fig. 5-97 Height Adjustment of the Lift Pin

3. Once the height adjustment of the lift pin on the left cylinder has been completed, proceed with height adjustment of the lift pin on the right cylinder.
   Height adjustment of the lift pin on the right cylinder is enabled with a clockwise or counterclockwise rotation.
   The adjustment of the unloader device in both cylinders is completed if the lift pin head is level with the cylinder sleeve seat.
4. Centerpunch the two cylinder sleeves to be aligned with the positioning mark (-) on the crankcase, which facilitates the adjustment of the unloader device for next disassembly and assembly (see Fig. 5-95).

【POINT】

- Find the highest lift pin among the six pins before adjusting the height, and align the other pins with the highest pin.

5.6.2.9 Valve Plate

1. Place the suction valve spring in the valve plate spring hole, as shown in Fig. 5-98.
   Insert a tapered spring with a slightly larger outer diameter into the spring hole. Push the spring in the hole, applying a twist to it in the direction of the helix.

Fig. 5-98 Valve Plate and Suction Plate Valve Spring

2. If the unloader device is placed in the cylinder in which a valve plate is mounted, move down the lift pin lower than the cylinder sleeve seat.
Push the unloader piston by inserting the eyebolt, which causes the lift pin to move downwards (see Fig. 5-99).

CAUTION

- **Failure to perform the above procedures will lead to malfunction of suction valve.**

Fig. 5-99 Positioning of the Push Rod

3. Attach the suction valve to the valve plate, and mount it in the discharge valve cage guide.
Place your hands into the hole in the center of the valve plate. from the seat side. By supporting the suction plate valve with your finger tips, mount the valve plate in the crankcase as shown in Fig. 5-100.
Position the valve plate in the cylinder hole on the crankcase, with it on the cylinder sleeve flange.
Move the assembled valve plate from side to side and up and down to make sure that it is positioned properly.

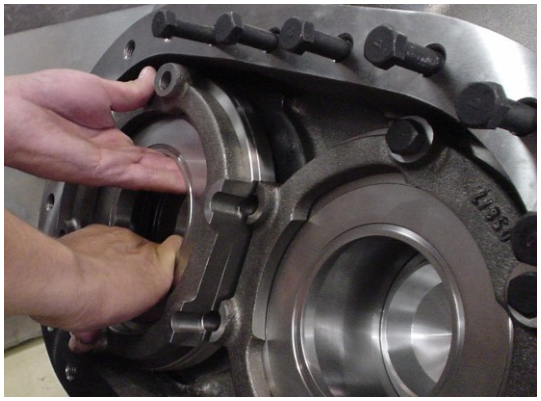

Fig. 5-100 Assembly of the Valve Plate

4. Slightly tighten the discharge valve cage guide bolts (2 pcs.) just enough to secure the assembled unit (see Fig. 5-101).

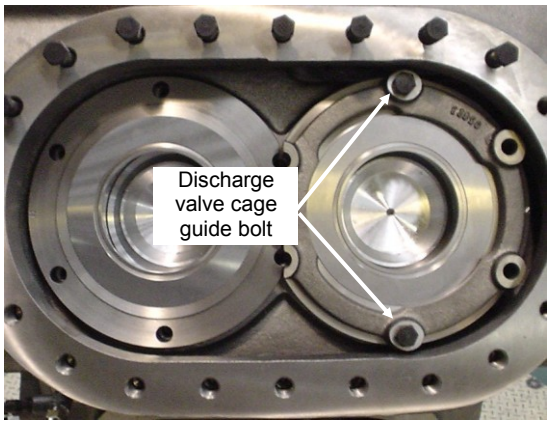

Fig. 5-101 Assembly of the Valve Plate

5. Attach the adjacent cylinder. Then, provide full tightening to all the bolts.
Provide constant tightening to the bolts to prevent uneven tension, and tighten them to the torque values.

Fig. 5-102 Mounting of the Valve Plate

6. Remove the eyebolt from the unloader cover after the mounting of the valve plate is completed. Make sure to insert the unloader allen screw into the hole from which the eyebolt was removed and tighten it, complete with washer (see Fig. 5-103).

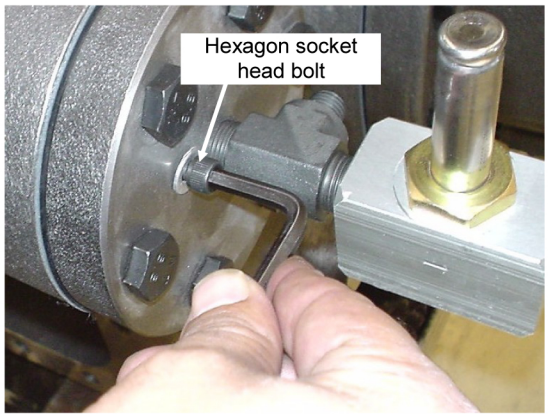

Fig. 5-103 Insertion of the Hexagon Socket Head Bolt

5.6.2.10 Attachment of Strainers and Hand Hole Covers.

WARNING

- **Heavy object. Use the assistance of 2 or more workers, for their assembly.**

Attach the oil strainer screen that is embedded in the oil strainer cover in the crankcase. Insert the scale trap screen and suction strainer, and attach the cover to each.

CAUTION

- **Ensure that the connecting rod bolt is tightened securely and that the crankcase is free of foreign objects, prior to mounting the hand hole cover.**

1. Place the safety bolt in the center hole on top.
2. Mount the gasket and hand hole cover, and place two hand hole cover bolts.
3. Remove the safety bolt and place the hand hole cover bolt. Tighten it to the specified torque value.
4. Install the oil pipe with the oil cooler attached. Complete the re-installation of all the unloader piping and gauge piping that were disconnected during disassembly. Piping re-installation is allowed only if cleanliness is assured after cleaning the inside by using compressed air. Make sure to secure the joint securely.
5. Mount the pulley hub or coupling hub on the compressor crankshaft.
   Attach the V-belt or coupling spacer to place the compressor in a state that becomes capable of idling.

WARNING

- **Always attach the belt cover and coupling guard for safety reasons.**

6. With the 3/4"-plug disconnected from the center of the hand hole cover top, charge lubricating oils. The removed plug is to be mounted using sealing tape after the oil charging is completed.

5.6.2.11 Idling Check

Idling check is required prior to mounting of the discharge valve ASSY, safety head spring, and head cover. Compressor idling with the above units unmounted enables you to detect not only a malfunction in the assembly but any abnormal event in the operating state before charging refrigerant.

Idling check is strongly recommended to assure safety during the refrigeration process including prevention of serious accidents attributed to incorrect assembly.

1. Repeat startup and shutdown every few seconds until the oil pressure indicator goes into action.
   Make sure of a rise in oil pressure, and bring the oil pressure indicator to continuous running. Ensure that variations in oil pressure associated with control of the oil release valve are observed, and adjust operating oil pressure to 0.25 MPaG.

CAUTION

- **The lubricating oils decreases in temperature and increases in viscosity immediately after the compressor has gone into action. Potential damage to the oil pressure indicator may occur if the compressor is started with the oil release valve fully closed which causes pressure to be 1 MPaG or higher. Before starting the compressor, open the oil release valve three counterclockwise turns from the closed position (clockwise).**

2. If the oil pressure indicator remains off after several attempts to start and shut down, a failure may be present in the compressor hydraulic system. Resume idling after the error was eliminated from the hydraulic system.

3. Check the idling sound from the compressor for a few minutes after the completion of startup. The normally-assembled compressor produces a quiet periodic sound from the moving parts.
An abnormal sound can be a sign of an incorrect assembly. Immediately bring the system to a halt and diagnose the cause of the abnormal sound. Idling resumption is allowed only after the cause has been eliminated.

4. By shining a light from a flashlight on the inner surface of the cylinder, visually check the lubricated condition on the cylinder wall, as shown in Fig. 5-104. An ideally lubricated condition is a layer of oil evenly spread out on the sleeve inner surface.

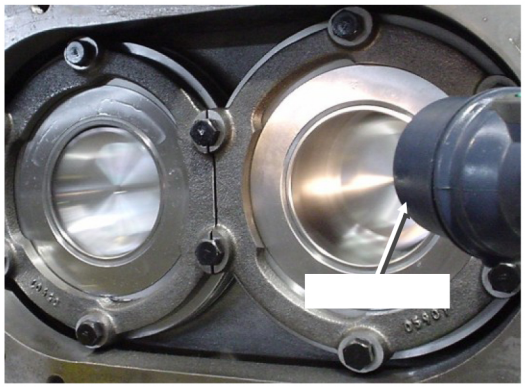

Fig. 5-104 Operational Check of the Suction Plate Valve

【POINT】

✧ The splattering of oil from the cylinder occurs at replacement of the cylinder sleeve and piston ring due to not having a working face on the sliding surface. In the above event, the replacement of the cylinder piston ring is recommended.

●

---

5. Perform an operational check of the suction plate valve and unloader device.
With the discharge valve ASSY in the discharge valve cage guide, apply pressure from above (see Fig. 5-105).
If the check finds a loud compressive sound, normal operation is assured in the suction plate valve embedded in the cylinder.

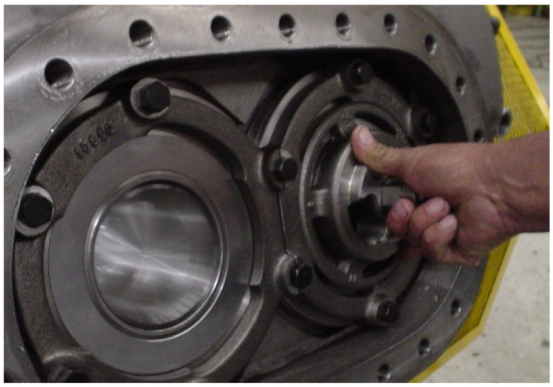

Fig. 5-105 Unloader Positioning Mark

6. Switch ON the solenoid valve or open the manual valve (unloaded) to produce a compression sound from the unload-load cylinder. It makes a gradual decrease in the compression sound during unloading. When the compression sound has almost faded, turn OFF the solenoid valve or close the manual valve to generate a gradual increase in the compression sound.

【POINT】

- The reduction and production of the compression sound is in response to valve control (open/close) denotes a normal operation of the unloader device.

CAUTION

- **An operational check is to be performed when the piston is in action. Exercise due care when carrying out this work.**

7. After completion of the operational check on all the relevant parts, bring the compressor to a halt and perform the assembly of the rest of the components.

⚠ WARNING

- **Be sure to turn OFF the main power and control power again to keep the compressor switched off before resuming assembly.**

5.6.2.12 Head Cover

⚠ WARNING

- **Heavy object. Use the assistance of 2 or more workers, for the assembly of the head cover.**

Assemble the discharge valve ASSY, safety head spring, and head cover in sequence. Conduct an operational check of the discharge valve prior to inserting the discharge valve ASSY into the discharge valve cage guide.

A normal operation of the discharge valve is ensured if it moves up and down when pushed with your thumb (see Fig. 5-106).

Fig. 5-106 Operation Check of the Discharge Valve

Re-assembly of the discharge valve ASSY must be performed in reverse order of its disassembly.

As with the valve plate, insert the discharge valve spring with the larger outer diameter into the spring hole, and push the spring in the hole, applying a twist to it in the direction of the helix. Use the specified disassembly tool (see Fig. 5-107) to tighten the discharge valve seat nuts No.1 and No.2, and tighten each nut to the specified torque value.

Fig. 5-107 Removal of Discharge Valve ASSY

1. With the normal operation of the discharge valve assured, insert the discharge valve ASSY into the discharge valve cage guide corresponding to the cylinder number stamped on the piston (see Fig. 5-108).

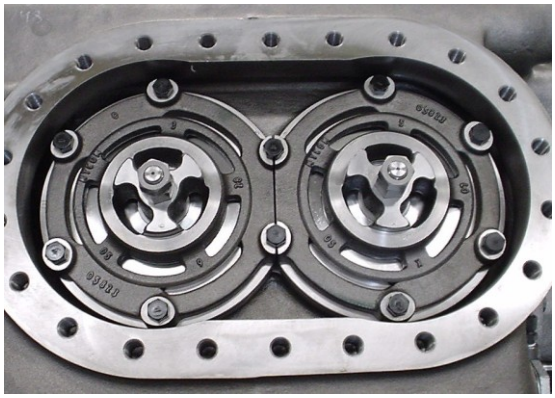

Fig. 5-108 Assembly of the Discharge Valve ASSY

2. Attach the safety head spring to the discharge valve ASSY, as shown in Fig. 5-109.
The bottom cylinder in the 8-cylinder compressor possesses a large amount of tilt that causes the attached spring to slide off.

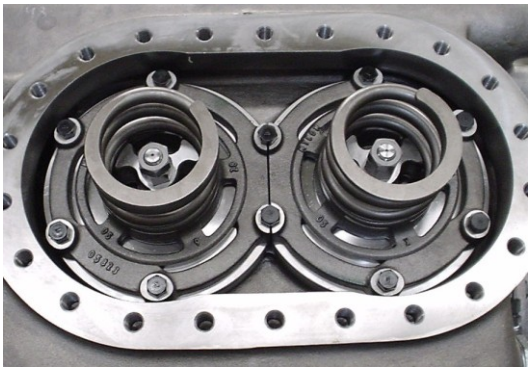

Fig. 5-109 Mounting of the Safety Head Spring

【POINT】

- The spring gains a better adhesion if attached with its coil end on top of the discharge valve cage.

3. Use the safety bolt when mounting the head cover. As shown in Fig. 5-110, place the safety bolt in the center bolt hole on top and place the head cover gasket.
Secure the head cover in the proper direction with the safety bolt the center bolt hole.
Attach the removed jacket cover and keep the rib located in the center of the head cover facing the crankshaft driving side (see Fig. 5-111).

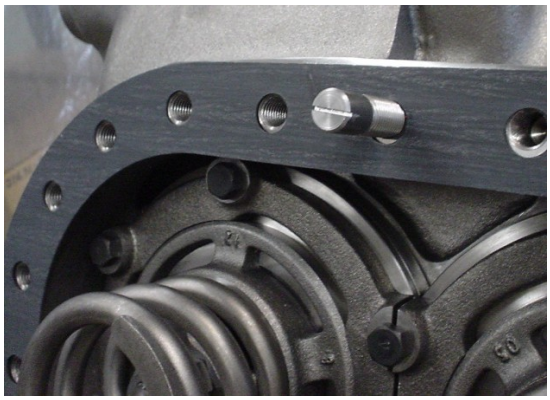

Fig. 5-110 Safety Bolt

CAUTION

- **Foreign objects may find their way into the lower cylinder if the head cover is attached to the top cylinder first. Always start with the lower cylinder when mounting the head cover.**

4. The head cover bolts are being pushed back by the safety head springs. Manually tighten two bolts diametrically opposite to each other two turns to compress the springs, slightly lowering the head cover.

5. Place the rest of the bolts in the corresponding bolt holes as with the first two bolts. Remove the safety bolt, and place the last bolt. With the specified tool, gradually tighten all the bolts at diametrically opposed positions.
Tighten them to the specified torque values.

6. Attach the jacket cover to the water-cooled head cover if it was removed.
Attach the jacket cover in its proper position of the indicated by the MYCOM logo and coolant piping.
The jacket cover should be attached with the rib located in the center of the head cover (see Fig. 5-112) aligned with that of the inside of the jacket cover (see Fig. 5-111).
The standard specification system is fitted with the jacket cover coolant water inlet/outlet facing the compressor oil pump side. (Refer to "3.2.5.5 Piping".)

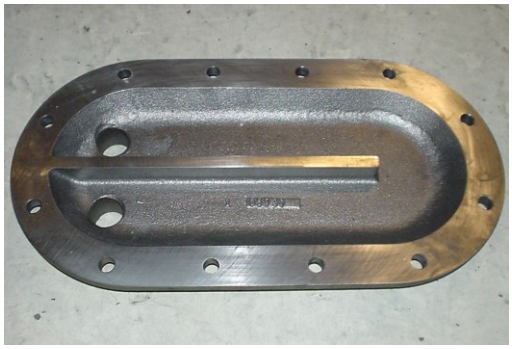

Fig. 5-111 Jacket Cover

Fig. 5-112 Water-cooled Head Cover

Fig. 5-113 Air-cooled Head Cover

5.6.2.13 Cooling Water Piping

The attachment of a braided pressure hose is to be performed according to the requirements for the cooling system (see "3.2.5.5 Piping"), the pressure braided hose varies in length for proper attachment. Always use new hose for the black pressure braided hose every time the piping is overhauled.

1. Insert the pressure braided hose into the hose nipple. The end of the pressure braided hose must be inserted 15 mm from the last lock flute of the hose nipple, as shown in Fig. 5-114.

Fig. 5-114 Hose Nipple Lock Flute

2. Attach the pressure braided hose with the hose band. The hose nipple is assigned three lock flutes as shown in Fig. 5-114. Tighten the hose band securely until the two wires of the hose band are engaged in the two lock flutes.
3. Ensure that the hose band is secured as shown in Fig. 5-115 when re-attaching the flange to the jacket cover.

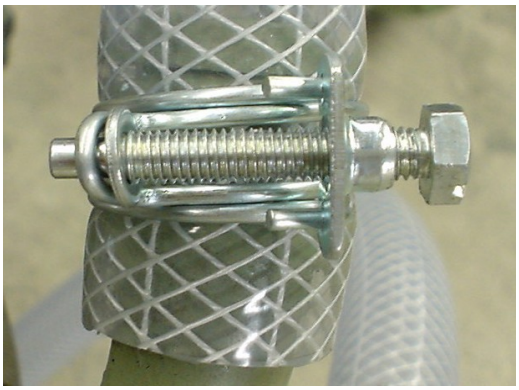

Fig. 5-115 Tightening of Hose Band

CAUTION

- **Failure to secure the hose band properly may lead to a cooling water leak during system operation. It could potentially damage the electric system including the motor and control panel**
- **Periodically check the tightening of the hose band.**

5.6.2.14 Final Inspection

The final inspection includes not only the additional tightening of the bolts securing the head cover and hand hole cover but also the securing of the piping joints and plugs.

Upon completion of the assembly, an air tightness test in the compressor is to be conducted with the use of compressed air and nitrogen gas.

1. Make sure there is no leakage from the various gaskets, piping joints and plugs.
2. Purge all air and gas through the purge valve from the compressor after completion of air tightness test.
3. Evacuate compressed air and nitrogen gas from the compressor sufficiently, and vent it to the refrigerant system through the opened stop valve. Fill the lubricating oils during vacuuming.

6 Troubleshooting

6.1 Troubleshooting Table

■ 1. Motor does not operate.

Features	Causes	Results	Countermeasures
Motor does not turn and does not start.	Motor failure	Breakers have tripped. Motor is ceased	Inspect and repair or replace
	Belt tension is too high.	Breakers have tripped. Motor is ceased.	Adjust
	Voltage is dropped.	Breakers have tripped. Motor is ceased.	
	Failure/is imminent the cylinder sleeve, piston, ring, other components are jammed The pulley does not rotate though you have removed the belt and rotated the pulley by hand.	Motor is ceased. Sleeve, piston, shaft seal part are not moving	Inspect and repair or replace
	Failure/mistake of automatic control starter related and electric related connections (single phase)	ceased Starters have failed to start motor	Inspect and repair
No reply though pressing the magnetic switch button	Breakers have tripped.	Cannot be operated	Inspect and replace
	Failure of magnetic switch contact or the protection switch is being pressed	Cannot be operated	Inspect and repair or replace
	Electric wires have been cut.	Cannot be operated	Inspect and repair or replace
	OP (oil pressure decrease protection equipment) or HP (abnormal high pressure protection equipment) is still activated and has not been reset..	Cannot be operated	Reset
Energized when the magnetic switch is pressed, but turns off when released.	Mistake in connection (Starter related connections)	Cannot be operated	Inspect and repair
	Contact defect of auxiliary contact or equivalent	Cannot be operated	Inspect and repair or replace

Features	Causes	Results	Countermeasures
Motor stops in a short time after starting.	OP (oil pressure decrease protection equipment) is activated. (a) Lubricating oils is run down. (b) Oil pressure is low.	Cannot be operated moving parts of the compressor is jammed ceased	(a) Supply oil. (b) Adjust the oil pressure.
	HP (abnormal high pressure protection equipment) is activated due to excessive discharge pressure. (a) Condenser is filled with non-condensable gas. (b) Excessive suction pressure	Motor is ceased, or cannot be operated.	(a) Purge air. (b) Replace the lubricating oils in the crankcase because the load is increasing, or drain the refrigerant from the crankcase of other compressor and supply warm oil.
	OP (oil pressure decrease protection equipment) is activated due to liquid back.	Cannot be operated	Inspect and repair
	Mistake in connection between the starter equipment and magnetic switch	Control equipment is ceased.	Inspect and repair
	Overload relay is activated on the OP (oil pressure protection equipment	Cannot be started	Wait until the protection equipment can be reactivated. After approx. 10 minutes, shift to automatic mode. (Note that you must investigate the cause and take an action.)

■ 2. Abnormal high pressure

Features	Causes	Results	Countermeasures
Condenser temperature is warmer than usual.	Cooling water shortage or cooling water temperature is excessively high.	HP is activated or the safety valve is opened resulting in large consumption of electricity.	Increase the volume of cooling water. Or lower the cooling water temperature.
Head cover is overheated.	Cooling water distribution is insufficient. Or cooling pipe is dirty.	HP is activated or the safety valve is opened resulting in large consumption of electricity.	Distribute water evenly. Or clean the cooling pipe.
Cooling water temperature of evaporative condenser is warm.	Fan failure, or spray nozzle and strainer are clogged.	Cooling ability has decreased.	Inspect, repair, and clean
Upper part of the condenser is warm but lower part is not warm. Crankcase easily	Refrigerant or lubricating oils are accumulated in the condenser resulting in small cooling area. (a) Pipe between the condenser and receiver is clogged.	Cooling ability has decreased.	(a) Inspect, adjust, and unclog

Features	Causes	Results	Countermeasures
becomes frosty.	(b) Refrigerant is excessive (the receiver is filled and starting to accumulate in the condenser).		(b) Wipe off the refrigerant.
Discharge pressure gauge needle is deflected and the condenser is slightly warm.	(a) Condenser is filled with air. Or there is a discharge pressure gauge failure	Cooling ability has decreased.	(a) Purge from the air vent valve.
	(b) Oil separator is filled with lubricating oils and the gas is blocked by an obstruction.		(b) Drain the lubricating oils.

■ 3. Discharge pressure is too low.

Features	Causes	Results	Countermeasures
Condenser and receiver are cold.	Amount of cooling water is excessive. Or cooling water temperature is low.	Power consumption is low and is in extremely good condition.	Adjust the regulating valve.
Liquid pipe is frosted and is in suction pressure vacuum condition.	Liquid pipe or suction pipe is clogged.	Ability falls.	Adjust the valve, inspect, and clean.
Cold head cover due to frosted crankcase	Expansion valve is opened too much resulting in wet compression (low suction temperature due to liquid back).	Discharge area of cooler may be damaged due to liquid hammer.	Narrow the expansion valve during operation.
Suction pressure is low and there is a leaking sound from the expansion valve.	Refrigerant shortage	Does not become cold	Fill with refrigerant.
High suction pressure	Gas leakage due to wear of the suction valve, discharge valve.	Ability decreased and sleeve has ceased.	Inspect and repair or replace the valve part

■ 4. Excessive suction pressure

Features	Causes	Results	Countermeasures
Crankcase is frosted.	Expansion valve is opened too much.	Liquid hammer occurs.	Adjust operation (narrow the expansion valve).
Value on the amp meter increased (current consumption; versus the case when the refrigerating load is normal).	Load has increased.	Motor is ceased.	Adjust operation.

Features	Causes	Results	Countermeasures
Discharge pressure is low. Suction side is not frosted.	Ability of compressor decreased (gas leakage from suction/discharge valve and sleeve) or gas leakage from safety valve. Suction plate valve is damaged.	Does not become cold	Disassemble for inspection and replace the parts.

■ 5. Suction pressure is too low.

Features	Causes	Results	Countermeasures
Refrigerated room temperature or brine temperature is higher than suction pressure.	Refrigerant shortage or expansion valve is throttled too much.	Does not become cold	Fill with refrigerant or adjust operation.
Liquid return occurred when the expansion valve was opened.	(a) Cooling pipe is filled with lubricating oils.	Does not become cold	(a) Drain the lubricating oils from the drain valve.
	(b) Cooling pipe is frosted or iced too much.		(b) Defrost
Suction pressure is low, compared to refrigerated room temperature or brine temperature, from the beginning of operation	(a) Cooling pipe and the suction pipe are too thin compared to the length. Or resistance is too high.	Does not become cold	(a) Mistake in piping or layout. Investigate and improve
Suction pressure is low compared to the pressure at the beginning of operation	(b) Gas strainers in the refrigeration system and suction pipe are blocked by rust or dust.		(b) Cleaning

■ 6. Abnormal noise during operation

Features	Causes	Results	Countermeasures
Continuous metal grinding sound occurs.	(a) Foreign material is stuck in between the cylinder head and piston.	Discharge area and shaft of the piston may be damaged.	(a) Disassemble, maintain, and replace
	(b) Discharge valve, suction valve, and piston ring are damaged.		(b) Disassemble and replace
Shaft seal part is heated.	(a) Metal is worn, ceased, or damaged.	Discharge area and shaft of the piston may be damaged.	Disassemble and replace (Note that supply pipe may be blocked.)
	(b) Oil pump damage	May be ceased	Stop operation, investigate cause, and replace
Crankcase is frosted.	Liquid back	Discharge area and piston may be damaged.	Stop operation, investigate cause, and replace Narrow the expansion valve during operation. If intense, narrow the suction stop valve and open it gradually.

Features	Causes	Results	Countermeasures
Loud or abnormal sound from the head cover.	(a) Oil hammer, Liquid back	Discharge area and piston may be damaged.	Prevent entry of oil (if liquid back occurs at the same time, also perform the countermeasure above.)
	(b) Plate valve is not functioning.	Plate valve damage.	Decrease the intermediate pressure or suction pressure, or increase the discharge pressure (enlarge the compression ratio)

■ 7. Temperature is high

Features	Causes	Results	Countermeasures
Head cover is overheated. (High discharge pressure, high suction pressure)	(a) Compression ratio has increased. (Condenser temperature has increased or refrigerant load has increased.)	Oil is ceased, carbon has adhered.	Increase cooling water for condenser. Or, higher the cooling water temperature.
	(b) Lubricating oils is ceased resulting in carbon accumulation and blocked gas passage.	Metal is worn and damaged, and sleeve has ceased.	Disassemble, inspect, and clean or replace
	(c) Discharge valve plate is damaged, or gas leakage	Cooling ability has decreased.	Disassemble, inspect, and replace
	(d) Gas leakage from safety valve	Cooling ability has decreased.	Lower the discharge pressure, adjust the safety valve.
Rise of oil temperature	Pump is heated due to oil cooler failure, lubricating oils shortage, contaminated oil, or oil filter blockage.	Carbon has adhered and ceased.	Clean and increase cooling water volume of oil cooler, replace the lubricating oils, clean the oil filter.
Flow of the compressor cooling water is insufficient.	Cooling water shortage or water passage is blocked	Metal is worn and ceased, and carbon has adhered to the discharge area.	Lubricant deterioration, clean and increase the volume of cooling water
Shaft seal part is especially hot.	Sliding section is about to be ceased.	moving section is ceased or damaged.	Repair or replace.
Discharge temperature is high (head cover is overheated)	Plate valve, especially discharge plate valve, is damaged	Problem between piston sleeve. Motor current is increased, cooling ability will decrease	Repair or replace.

■ 8. Abnormal oil consumption

Features	Causes	Results	Countermeasures
Crankcase tends to be frosted.	Foaming of lubricating oils occurs due to liquid back. Especially during vacuum operation	Cannot be operated	Adjust operation.
There is no other error.	Pressure equalizer hole of the crankcase is blocked (opened too much during vacuum operation). Or, suction strainer is clogged.	Oil hammer occurs.	Inspect and clean, or clean the strainer
	Wear on the piston ring		Replace the piston ring
	Attachment of the piston ring is inappropriate		Reattach properly

Features	Causes	Results	Countermeasures
Head cover is overheated.	Lubricating oils has ceased due to abnormal high pressure.	Carbon is accumulated.	Lower the discharge pressure
Value on the amp meter increased (current consumption; versus the case when the refrigerating load is normal).	Cylinder sleeve is damaged, is about to cease, or score due to wear on the ring.	Sleeve and piston are ceased.	Inspect and adjust or replace
Excessive oil pressure	Oil pressure is excessive (in the case when the lubricating oils viscosity is normal).	Oil hammer	Adjust
Oil pressure is low.	Lubricating oils viscosity is low and light. (Air bubbles are mixed in, or the rise of oil temperature.)	Sliding section is ceased.	Adjust and replace the lubricating oils.
Crankcase is overheated.	Overheated operation (due to high discharge pressure)	Lubricating oils viscosity is low. Carbon has adhered.	Replace with the new lubricating oils of which viscosity is normal (lower the discharge pressure).
Oil return line from the oil separator is cold or hot	Maladjustment or action error of flow adjustment valve and float valve.	Abnormal wear of parts such as cylinder sleeve	Adjust the valve to an appropriate opening.

■ 9. Does not become cold

Features	Causes	Countermeasures
Suction pressure does not lower.	Deficiency in performance (a) Compressor (b) Cooling pipe (c) Condenser	Inspect and expand if the condition is normal. (a) Expansion (b) Expansion (c) Inspect and expand if the condition is normal.
	Load has increased.	Continue operation if temporary. Expand if continues.
	Lack of or deterioration of heat insulator	Inspect, readjust the installation condition, and repair
	Abnormal high pressure	Lower the discharge pressure (Increase the volume of cooling water, expand the condenser, clean the condenser, release air.)
	Gas leakage	Inspect and repair
Low suction pressure (Suction pipe is not frosted, liquid return tends to occur.)	Heated operation (Expansion valve is closed too much.)	Adjust the expansion valve (open).
	Cooling pipe is small in length.	Expansion
	Cooling pipe is frosted too much.	Defrost
	Cooling pipe is filled with lubricating oils.	Drain the oil.
	Suction line is narrowed.	Readjust the piping.
High discharge pressure	Cooling water shortage or cooling water temperature rise	Increase the volume of water.
	Deficiency in condenser performance	Expansion
	Condenser cooling surface is dirty.	Cleaning

Features	Causes	Countermeasures
High discharge pressure (Lower part of the condenser is cold, receiver is filled with refrigerant.)	Refrigerant is excessive.	Drain the excessive refrigerant.
	Discharge line pipe is clogged.	Readjust the piping.
Abnormal oil consumption (Increase in discharge temperature)	Wear on the piston ring	Replace
		Inspect and repair
	Gas leakage	Inspect and repair

7 Related Document

7.1 Exploded View and Parts List

7.1.1 Compressor Assembly Exploded View

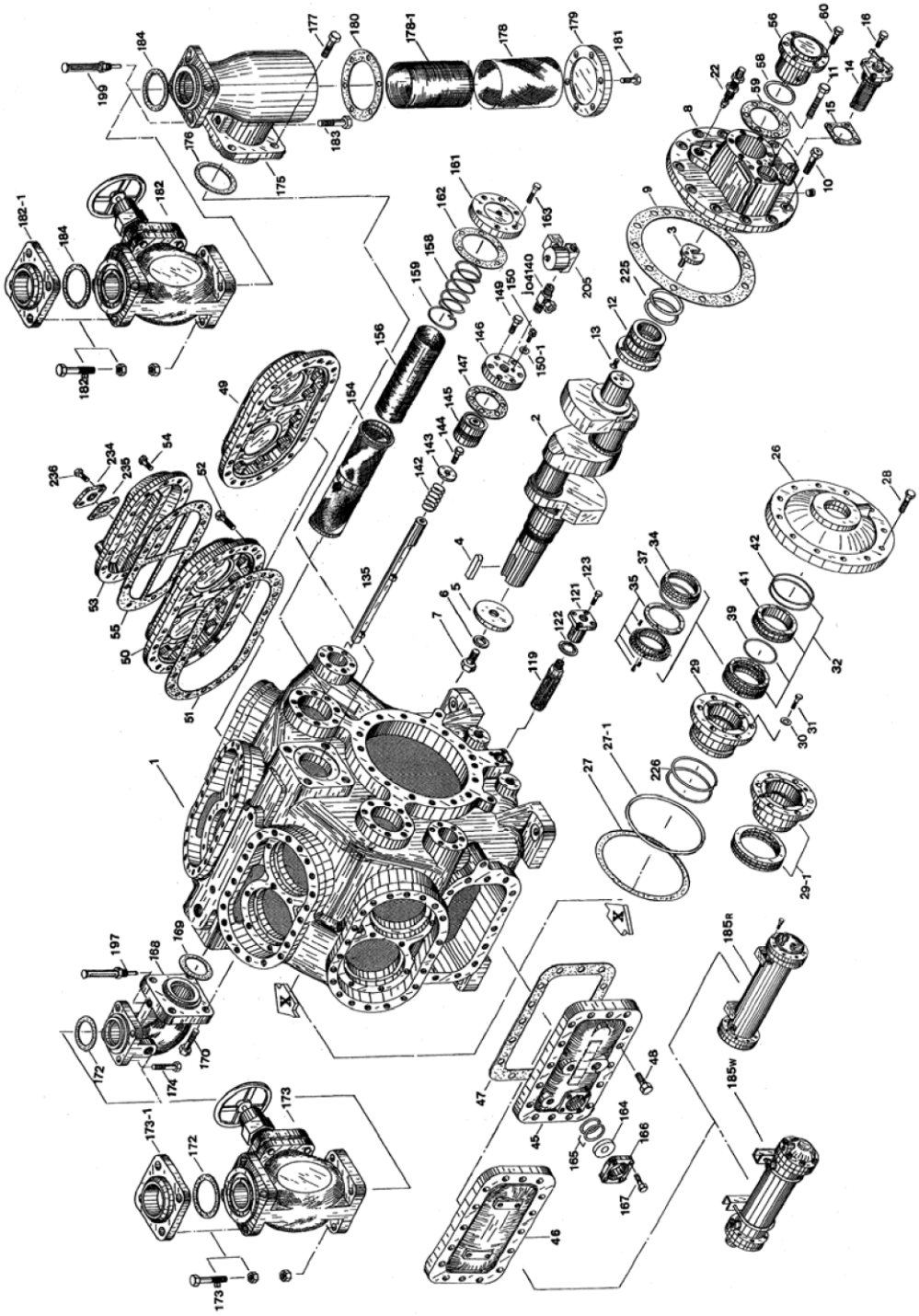

Fig. 7-1 Compressor Assembly Exploded View

7.1.2 Exploded View of the Cylinder

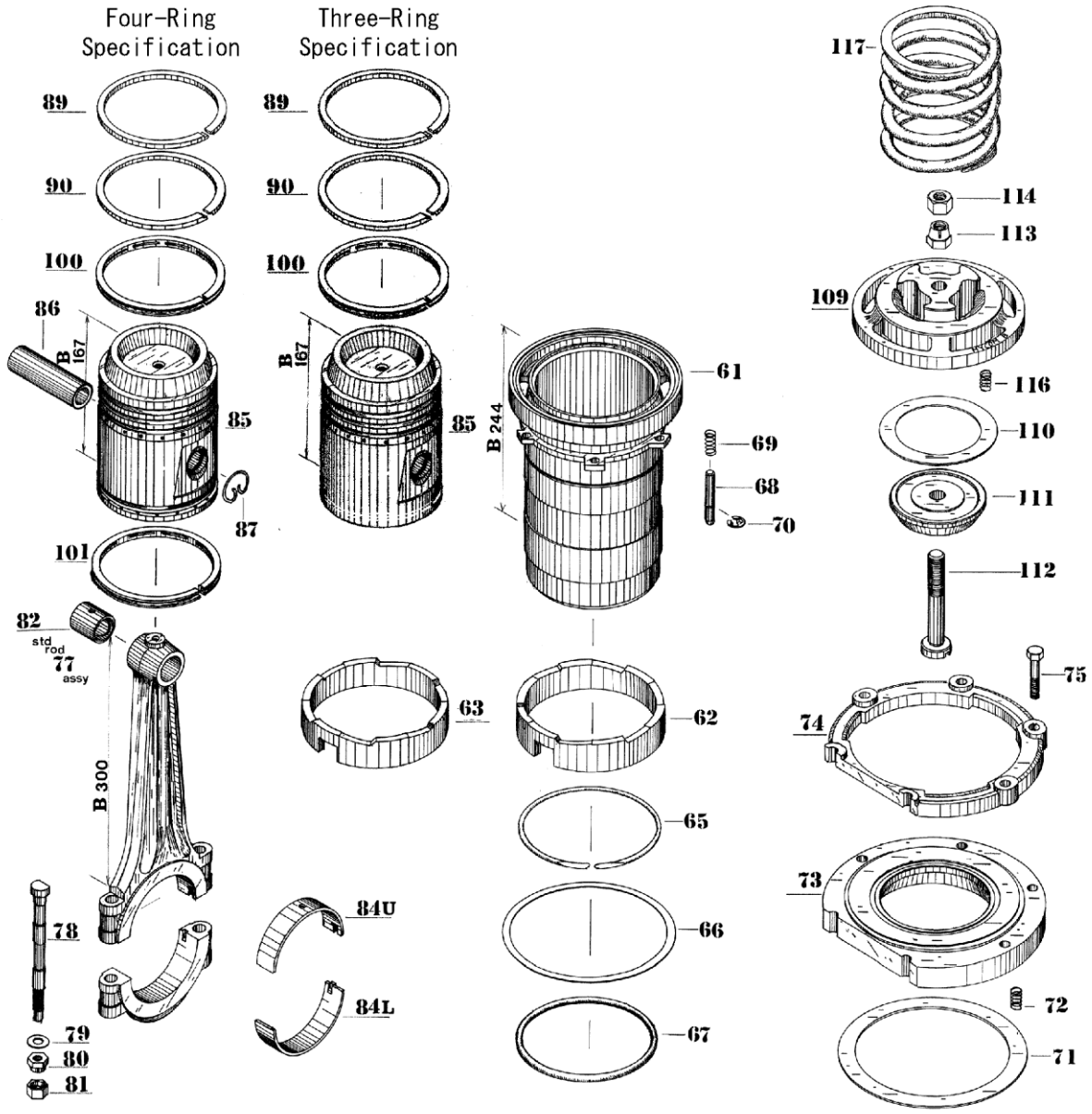

Fig. 7-2 Exploded View of the Cylinder

7.1.3 Exploded View of the Thrust Bearing

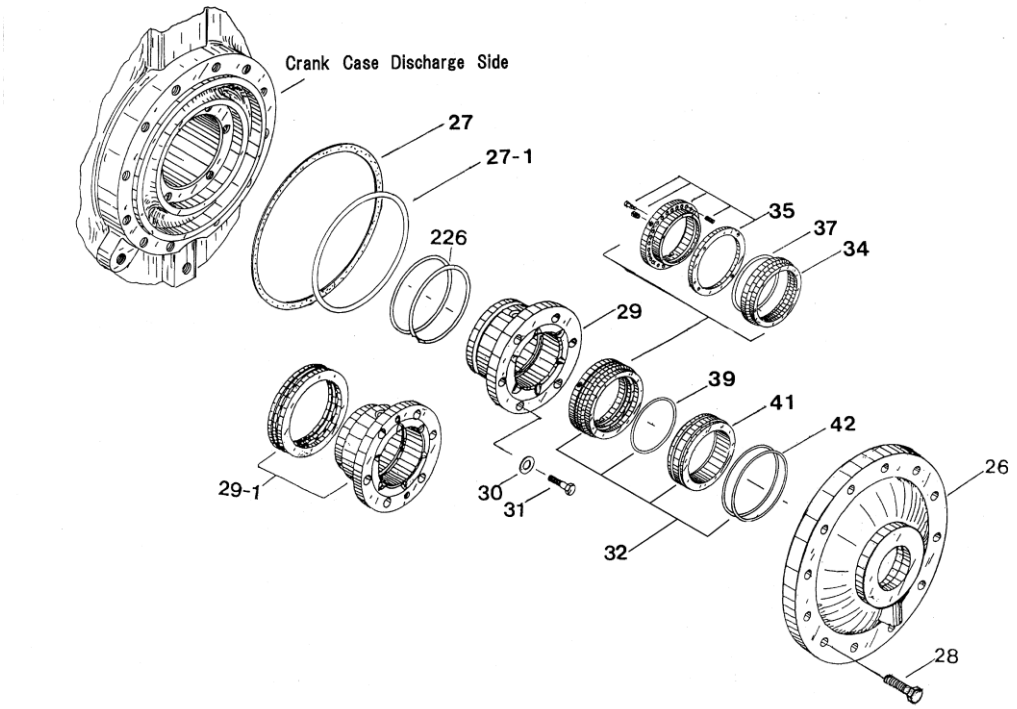

Fig. 7-3 Exploded View of the Thrust Bearing

7.1.4 Exploded View of the Main Bearing

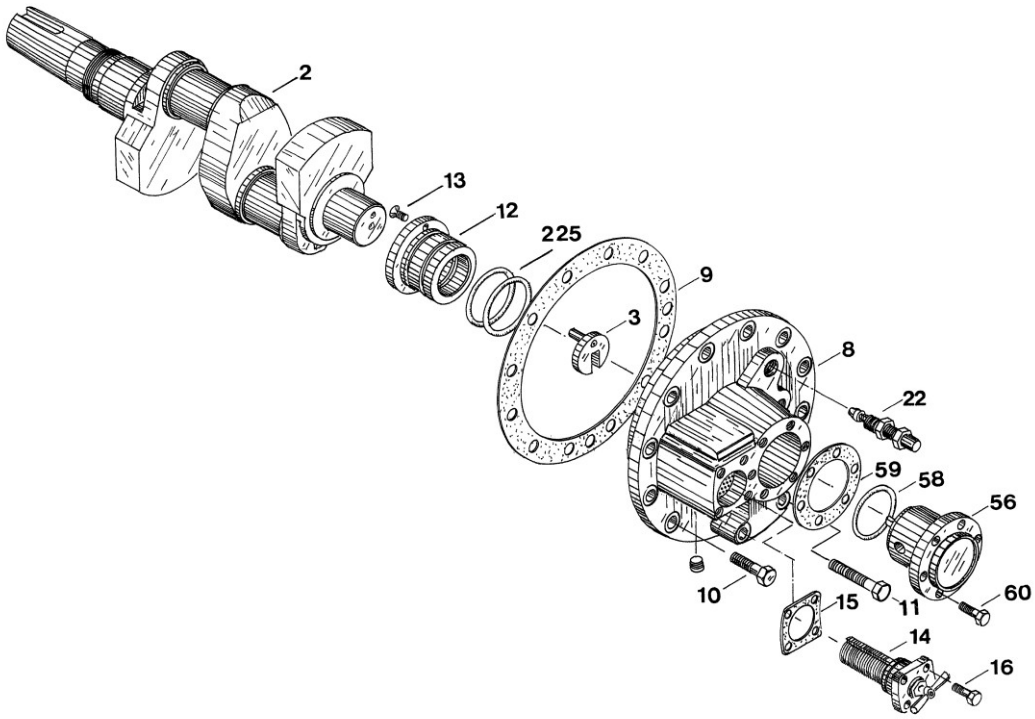

Fig. 7-4 Exploded View of the Main Bearing

7.1.5 Parts List

Table 7-1 Configuration Table of the Parts

Part Number	Part Name	Quantity					Remarks
		4	6	8	42	62	
1	Crankcase	1	1	1	1	1	
2	Crankshaft	1	1	1	1	1	Standard or BB
3	Drag crank	1	1	1	1	1	
4	Shaft key	1	1	1	1	1	24×15.6×L110
5	Flat washer	1	1	1	1	1	φ90
6	Lock washer	1	1	1	1	1	For M27
7	Flywheel set bolt	1	1	1	1	1	M27×L50 (P=1.5)
8	Main bearing head	1	1	1	1	1	
9	Main bearing head gasket	1	1	1	1	1	
10	Main bearing head hexagon head bolt (short)	14	14	14	14	14	M16×L55-8.8
11	Main bearing head hexagon head bolt (long)	2	2	2	2	2	M16×L110-8.8
12	Main bearing	1	1	1	1	1	
225	Main bearing "O" ring (for single two-stage compressor)	—	—	—	2	2	
13	Main bearing screw	1	1	1	1	1	M6×L15-4.8
14	CUNO filter assembly	1	1	1	1	1	
15	CUNO filter cover gasket	1	1	1	1	1	
16	CUNO filter cover hexagon head bolt	4	4	4	4	4	M10×L30-6.8 (small head)
22	Oil pressure regulating valve assembly	1	1	1	1	1	
26	Cover plate	1	1	1	1	1	
27	Cover plate gasket	1	1	1	1	1	
27-1	Cover plate "O" ring	1	1	1	1	1	JIS B 2401 G230
28	Cover plate hexagon head bolt	12	12	12	12	12	M16×L55-8.8
29	Thrust bearing	1	1	1	1	1	Standard
29-1	Thrust bearing (B.B type)	1	1	1	—	—	For BB
226	Thrust bearing "O" ring (for single two-stage compressor)	—	—	—	2	2	
30	Thrust bearing hexagon head bolt washer	6	6	6	6	6	For M12 (small head)
31	Thrust bearing hexagon head bolt	6	6	6	6	6	M12×L40-8.8
32	Shaft seal assembly	1	1	1	1	1	
34	Seal ring	1	1	1	1	1	
37	Seal ring "O" ring	1	1	1	1	1	
35	Drive collar assembly	1	1	1	1	1	
39	Drive collar "O" ring	1	1	1	1	1	
41	Floating seat	1	1	1	1	1	
42	Floating seat "O" ring	2	2	2	2	2	
45	Hand hole cover (with window)	1	1	1	1	1	
46	Hand hole cover (without window)	1	1	1	1	1	
47	Hand hole cover gasket	2	2	2	2	2	
48	Hand hole cover screw	32	32	32	32	32	M16×L55-8.8
49	Head cover (air cooled)	2	3	4	3	4	Not used with water cooled specification.
50	Head cover (water cooled)	2	3	4	3	4	Not used with air cooled specification.
51	Head cover gasket	2	3	4	3	4	
52	Head cover screw	44	66	88	66	88	M16×L45-10.9

Part Number	Part Name	Quantity					Remarks
		4	6	8	42	62	
53	Head jacket cover	2	3	4	3	4	Not used with air cooled specification.
54	Head jacket cover screw	24	36	48	36	48	M10×L25 Not used with air cooled specification.
55	Head jacket cover gasket	2	3	4	3	4	Not used with air cooled specification.
56	Oil pump assembly	1	1	1	1	1	Refer to "7.3 Specification of Oil Pump".
58	Oil pump "O" ring	1	1	1	1	1	JIS W 1516 P43
59	Oil pump gasket	1	1	1	1	1	
60	Oil pump hexagon head screw	6	6	6	6	6	M12×L40-8.8 *2
61	Cylinder sleeve	4	6	8	6	8	
62	Cam ring (leftward sloped)	2	2	2	4	4	
63	Cam ring (rightward sloped)	2	2	4	—	2	
65	Retaining ring	4	4	6	4	6	
66	Cylinder sleeve gasket	4	6	8	6	8	
67	Cylinder sleeve "O" ring (for high stage in single two-stage compressor)	—	—	—	2	2	
68	Lift pin	24	24	36	24	36	
69	Lift pin spring	24	24	36	24	36	
70	Lift pin stop ring	24	24	36	24	36	E4
71	Suction valve	4	6	8	6	8	
72	Suction valve spring	32	48	64	L 36(32) H 16	L 54(48) H 16	N,R: TYPE II Others: TYPE IV
73	Valve plate	4	6	8	L 4 H 2	L 6 H 2	Refer to "7.4 Specification List of Suction Valve and Discharge Valve".
74	Discharge valve cage guide	4	6	8	6	8	
75	Discharge valve cage guide hexagon head bolt	20	30	40	30	40	M12×L60-8.8 (P=1.25)
76	Connecting rod assembly (for high stage in single two-stage compressor)	—	—	—	2	2	
77	Connecting rod assembly	4	6	8	4	6	
78	Connecting rod screw	8	12	16	12	16	1/2-20UNF×L140
79	Connecting rod hexagon head bolt washer	8	12	16	12	16	
80	Connecting rod tightening nut (first)	8	12	16	12	16	1/2-20UNF
81	Connecting rod tightening nut (second)	8	12	16	12	16	1/2-20UNF
82	Connecting rod bushing	4	6	8	4	6	
83	Connecting rod needle bearing (for high stage in single two-stage compressor)	—	—	—	2	2	
84U	Bearing halves (top)	4	6	8	6	8	
84L	Bearing halves (bottom)	4	6	8	6	8	
85	Piston	4	6	8	6	8	
86	Piston pin	4	6	8	6	8	
87	Piston pin locking spring	8	12	16	12	16	
89	Piston ring 1st	4	6	8	6	8	
90	Piston ring 2nd	4	6	8	6	8	
100	Oil ring 3rd	4	6	8	6	8	

Part Number	Part Name	Quantity					Remarks
		4	6	8	42	62	
101	Oil ring 4th	4	6	8	6	8	Not used with three-ring specification.
109	Discharge valve cage	4	6	8	L 4 H 2	L 6 H 2	Refer to "7.4 Specification List of Suction Valve and Discharge Valve".
110	Discharge valve	4	6	8	6	8	
111	Discharge valve seat	4	6	8	6	8	
112	Discharge valve hexagon head bolt	4	6	8	6	8	5/8-18UNF×L82
113	Discharge valve tightening nut (first)	4	6	8	6	8	5/8-18UNF
114	Discharge valve tightening nut (second)	4	6	8	6	8	5/8-18UNF
116	Discharge valve spring	48	72	96	L 36 H 24	L 54 H 24	SR,NR: TYPE III Others: TYPE IV
117	Safety head spring	4	6	8	6	8	
119	Oil strainer	1	1	1	1	1	
121	Oil strainer cover	1	1	1	1	1	
122	Oil strainer cover gasket	1	1	1	1	1	
123	Oil strainer cover hexagon head bolt	4	4	4	4	4	M10×L30-6.8 (small head)
135	Unloader push rod						Refer to "4.3 Capacity Control Order".
142	Unloader device spring	2	2	3	2	3	
143	Pushrod washer	2	2	3	2	3	
144	Pushrod hexagon head bolt	2	2	3	2	3	M10×L20-4.6 (small head)
145	Unloader piston	2	2	3	2	3	
146	Unloader piston cover	2	2	3	2	3	
147	Unloader piston cover gasket	2	2	3	2	3	
149	Unloader piston cover hexagon head bolt	12	12	18	12	18	M10×L35-8.8
150	Unloader piston cover hexagon socket head bolt	2	2	3	2	3	W 1/4×L15-10.9
150-1	Hexagon socket head bolt washer	2	2	3	2	3	
154	Suction strainer	1	2	2	—	—	*1
156	Suction filter metal mesh canvas	1	2	2	—	—	*1
158	Suction strainer holder spring	1	2	2	—	—	*1
159	Canvas holder snap ring	1	2	2	—	—	*1
161	Suction end cover	1	2	2	—	—	
162	Suction end cover gasket	1	2	2	—	—	
163	Suction end cover hexagon head bolt	8	16	16	—	—	M12×L40-8.8
164	Oil sight glass	1	1	1	1	1	
165	Oil sight glass "O" ring	2	2	2	2	2	JIS W 1516 P35
166	Oil sight gland	1	1	1	1	1	
167	Oil sight gland hexagon head bolt	4	4	4	4	4	M10×L30-6.8 (small head)
168	Discharge elbow	—	1	1	L 1 H 1	L 1 H 1	(Refer to A in "7.2 Specification of Discharge Elbow and Scale Trap".)

Part Number	Part Name	Quantity					Remarks
		4	6	8	42	62	
169	Discharge elbow gasket	—	1	1	L 1 H 1	L 1 H 1	(Refer to B in "7.2 Specification of Discharge Elbow and Scale Trap".)
170	Discharge elbow hexagon head bolt	—	4	4	L 4 (1) 2 (2) 2	L 4 (1) 2 (2) 2	(Refer to C in "7.2 Specification of Discharge Elbow and Scale Trap".)
172	Discharge shut-off valve mating gasket	2	1	1	L 1 H 1	L 1 H 1	
173	Discharge shut-off valve	1	1	1	L 1 H 1	L 1 H 1	
173-1	Discharge shut-off valve companion flange	1	1	1	L 1 H 1	L 1 H 1	
173B	Discharge shut-off valve companion flange mounting bolt and nut	4	4	4	L 4 H 4	L 4 H 4	
174	Discharge shut-off valve mounting bolt and nut	4	4	4	L 4 H 4	L 4 H 4	
175	Scale trap	—	1	1	L 1 H 1	L 1 H 1	(Refer to D in "7.2 Specification of Discharge Elbow and Scale Trap".)
176	Scale trap mating gasket	—	1	1	L 1 H 1	L 1 H 1	(Refer to E in "7.2 Specification of Discharge Elbow and Scale Trap".)
177	Scale trap hexagon head bolt	—	4	4	8	L 4 H 4	(Refer to F in "7.2 Specification of Discharge Elbow and Scale Trap".)
178	Scale Trap Screen	—	1	1	2	L 1 H 1	
178-1	Scale trap metal mesh canvas	—	1	1	L 1 H 1	L 1 H 1	
179	Scale trap cover	—	1	1	2	L 1 H 1	

Part Number	Part Name	Quantity					Remarks
		4	6	8	42	62	
180	Scale trap cover gasket	—	1	1	2	L 1 H 1	
181	Scale trap cover hexagon head bolt	—	8	8	8	L 8 H 4	M12×L40-8.8
182	Suction shut-off valve	1	1	1	L 1 H 1	L 1 H 1	
182-1	Suction shut-off valve companion flange	1	1	1	L 1 H 1	L 1 H 1	
182B	Suction shut-off valve companion flange mounting bolt and nut	4	4	4	L 4 H 4	L 4 H 4	
183	Suction shut-off valve mounting bolt and nut	4	4	4	L 4 H 4	L 4 H 4	
184	Suction shut-off valve mating gasket	2	2	2	L 2 H 2	L 2 H 2	
185W	Water-cooled oil cooler assembly	(1)	(1)	(1)	(1)	(1)	
185R	Lubricating oils cooler assembly	(1)	(1)	(1)	(1)	(1)	
197	Thermometer set (discharge side)	(1)	(1)	(1)	(2)	(2)	
234	Head jacket cover water flange	4	6	8	6	8	
235	Head jacket cover water flange gasket	4	6	8	6	8	
236	Head jacket cover water flange hexagon head bolt	8	12	16	12	16	
205	Unloader solenoid valve	(1)	(1)	(1)	(1)	(1)	
JO4140	T-type half union (R3/8×Ø6×R3/8)	(1)	(1)	(1)	(1)	(1)	

*1 These parts are not assembled if the scale trap (175) is mounted.

*2 The type of the oil pump hexagon head screw may be M12×L35 depending on the shape of the oil pump flange.

7.2 Specification of Discharge Elbow and Scale Trap

Number of Cylinders	A	B	C	D	E	F
6	TYPE: 6BE1	90A (MYCOM)	M20×L60-8.8	TYPE: 8BT1	100A (MYCOM)	M22×L65-8.8
8	TYPE: 8BE2	90A (MYCOM)	M20×L60-8.8	TYPE: 8BT1	100A (MYCOM)	M22×L65-8.8
42	L TYPE: 6AE1	65A (MYCOM)	M16×L55-8.8	L TYPE: 8AT1	100A (MYCOM)	M20×L60-8.8
	H TYPE: 62BE1	65A (MYCOM)	(1) M16×L55-8.8 (2) M16×L90-8.8	H TYPE: 6AT1	80A (MYCOM)	M20×L60-8.8
62	L TYPE: 8AE1	80A (MYCOM)	LOW M20×L60-8.8	L TYPE: 8BT1	100A (MYCOM)	M22×L65-8.8
	H TYPE: 62BE1	65A (MYCOM)	(1) M16×L55-8.8 (2) M16×L90-8.8	H TYPE: 6AT1	80A (MYCOM)	M20×L60-8.8

L: Low stage, H: High stage

7.3 Specification of Oil Pump

MB: Single-stage compressor

MB2: Single two-stage compressor and single-stage/two-stage switchable compressor

MB042: R23

7.4 Specification List of Suction Valve and Discharge Valve

Following is a specification list of the suction valve and discharge valve according to the type of refrigerant.

- NH_3 specification of WBHE series is modified form of WBH series.
- About Single Two-stage Compressor
  For the valve specification of the high stage, refer to the column for single-stage compressor.
  For the valve specification of the low stage, refer to the column for booster.

7.4.1 Specification List of Suction Valve Plate

Table 7-2 Specification List of Suction Valve

	NH_3	HFC (R404A, R507A or the like)	HCFC (R22 or the like)	Propane	WBH Series			
					NH_3	HFC	HCFC	Propane
Single-stage compressor	WN-II	WN-II	WN-II	WN-II	WN	WR	WR	WR
Booster	N	WN	R	N	N	WN	R	N

7.4.2 Specification List of Discharge Valve Plate

Table 7-3 Specification List of Discharge Valve

	NH_3	HFC (R404A, R507A or the like)	HCFC (R22 or the like)	Propane	WBH Series			
					NH_3	HFC	HCFC	Propane
Single-stage compressor	WCN-II	WCRH	WCN-II	WCN-II	WCN	WCRH	WCR	WCR
Booster	SN	SR	SR	WCN-II	SN	SR	SR	WCR

*: For WCRH, the specification (material) of the discharge valve differs from the other compressor. ("SFW" is printed as a mark.)

7.5 List of Tightening Torques for Bolts and Nuts

Table 7-4 List of Tightening Torques for Bolts and Nuts

No.	Bolt Name	Bolt Size	Tightening Torque	
			N•m	kgf•cm
7	Flywheel set bolt	M27×L50 (P1.5)	380	3800
11	Main bearing head hexagon head bolt (long)	M16×L110	120	1200
10	Main bearing head hexagon head bolt (short)	M16×L55	120	1200
28	Cover plate hexagon head bolt	M16×L55	120	1200
98	Hand hole cover screw	M16×L55	120	1200
52	Head cover screw	M16×L45	120	1200
45	Discharge valve cage guide hexagon head bolt	M12×L60 (P1.25)	80	800
763	Suction end cover hexagon head bolt	M12×L40	80	800
783	Scale trap cover hexagon head bolt	M12×L40	80	800
31	Thrust bearing hexagon head bolt	M12×L40	80	800
60	Oil pump hexagon head screw	M12×L40 (L35)	80	800
749	Unloader piston cover hexagon head bolt	M10×L35	40	400
123	Oil strainer cover hexagon head bolt	M10×L30	40	400
76	CUNO filter cover hexagon head bolt	M10×L30	40	400
767	Oil sight gland hexagon head bolt	M10×L30	40	400
773	Discharge valve tightening nut (first)	5/8"	120	1200
774	Discharge valve tightening nut (second)	5/8"	80	800
80	Connecting rod tightening nut (first)	1/2"	120	1200
87	Connecting rod tightening nut (second)	1/2"	80	800

7.6 Part Replacement Standards

■ Suction Filter/ Oil Strainer/ Oil Filter

1. When cleaning the metallic mesh, inspect that the mesh is not torn or soldered part is separated.
If defects are found, always repair or replace it with a new one.

【POINT】

- Special flux must be used for soldering stainless steel parts.

2. If there are plugs in the fine net and it cannot be cleaned, blow the dust off with the compressed air from the direction opposite of the fluid flow.

3. Suction filter/oil strainer is a cylindrical shaped filter with a large pass area. If the filter is clogged, blow it off with the compressed air from inside.

4. If the oil filter is clogged, replace it.

■ Crankshaft

CAUTION

- **The crankshaft cannot be overlaid because of its material characterization. If the crankshaft is overlaid (by plating or welding), it may cause compressor breakage.**

1. Inspect each bearing axes of the crankshaft for wear.
If it is worn, the sliding section and non-sliding section of the bearing axis will become uneven. Inspect visually and by touching it with your hand.
Measure the diameter of each bearing axis at the worn part using a macro meter.
If the diameter is below the usage limit, replace the crankshaft.

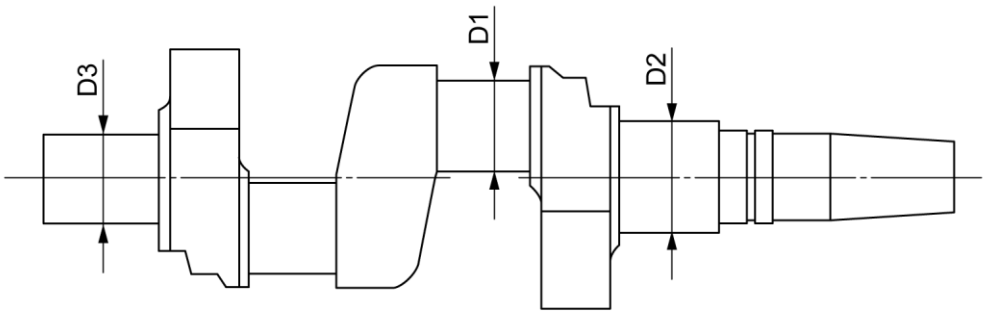

WBHE0700029a

Measurement Point		Standard Dimensions (mm)	Usage Limit (mm)
Diameter of crank pin	D1	90	89.82
Diameter of thrust bearing	D2	112	111.85
Diameter of main bearing	D3	92	91.85

2. Inspect each sliding section of the crankshaft for scratches.
If scratches are found, repair it by using sandpaper (#800 or more) or a grinding stone.

3. Remove all the plugs attached to the crankshaft and clean the oil holes.
After cleaning the oil holes, check that the oil flows properly.
Reattach the plugs immediately after checking the oil holes. If the plugs are left unplugged, oil pressure will not increase resulting in failure.

4. Inspect the mechanical seal attachment section of the crankshaft for scratches.
If scratches are found, repair it by using sandpaper (#800 or more) or an oilstone.

■ Connecting Rod

Measure the inner diameter of the shaft hole at the small end of the connecting rod.

If the inner diameter of the shaft hole exceeds the usage limit, replace the connecting rod bushings.

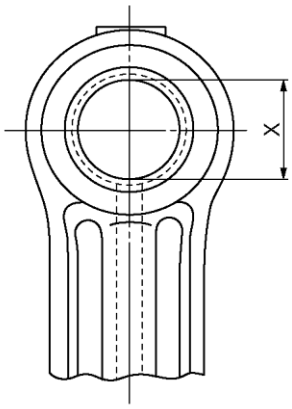

WBHE0700015a

Measurement Point		Standard Dimensions (mm)	Usage Limit (mm)
Inner diameter of the shaft hole at the small end of the connecting rod	X	40.0	40.1

1. When replacing the needle bearing, press fit it with a special tool (optional.)
   Do not use a hammer to fit the needle bearing as it may damage the needle bearing.
   Replace it according to the recommended period of time.
2. Inspect the surface of the bearing halves assembled for foreign materials.
   If there are foreign materials on the surface of the bearing halves, replace them.
   Measure the thickness of the center part of the bearing halves.
   If the thickness is below the usage limit, replace the bearing halves.
   Replace it according to the recommended period of time.

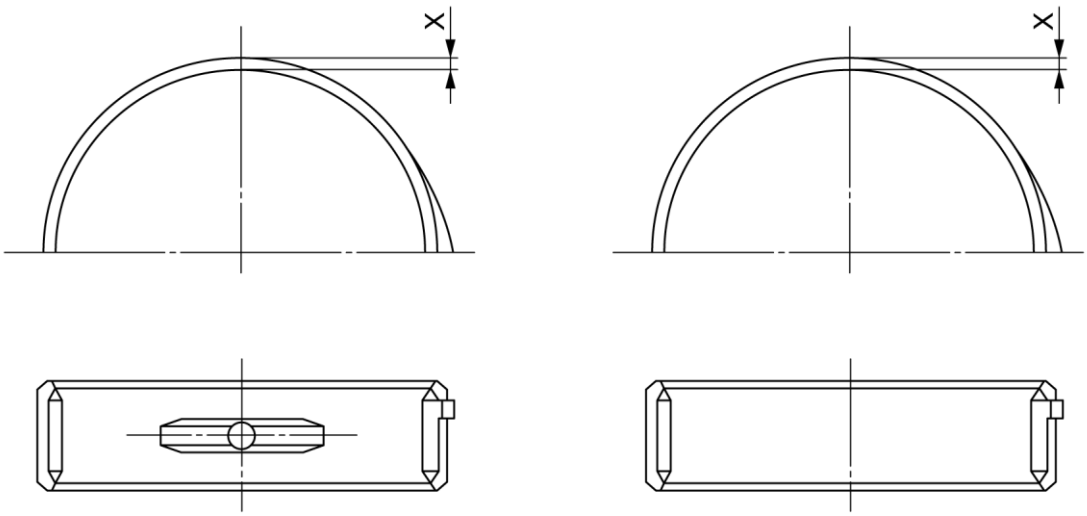

WBHE0700020a

Measurement Point		Standard Dimensions (mm)	Usage Limit (mm)
Thickness of the center part of the bearing halves	X	3.46	3.31

■ Cylinder Sleeve

1. Inspect the surface of the suction valve seat on the top of cylinder sleeve for scratches.
If there are scratches on the surface of the valve seat, repair them by lapping.

2. Measure the height of the seat.
If the height of the seat exceeds the usage limit, replace the cylinder sleeve.

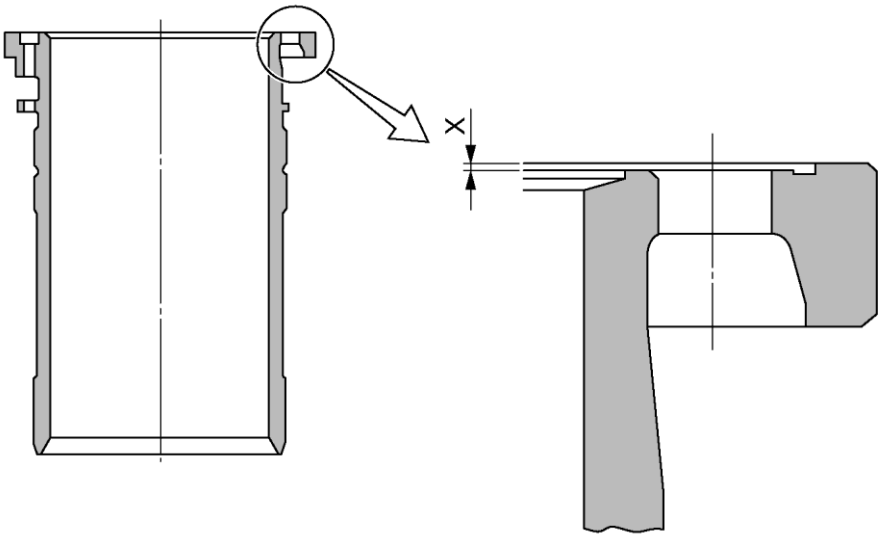

WBHE0700016a

Measurement Point		Standard Dimensions (mm)	Usage Limit (mm)
Height of the cylinder sleeve seat	X	0	0.15

3. Inspect the inner surface of the cylinder sleeve for scratches.
If scratches are found in the inner surface, repair it by using a smooth grinding stone.

4. Measure the inner diameter of the cylinder.
If the inner diameter of the cylinder exceeds the usage limit, replace the cylinder sleeve.

【POINT】

- The section 5—7 mm from the top of the inner surface of the cylinder sleeve is the section most worn.

Measurement Point	Standard Dimensions (mm)	Usage Limit (mm)
Inner diameter of the cylinder	130	130.15

■ Discharge Valve (Assembly)/ Suction Valve (Assembly)

1. Replace the discharge valve, suction valve, and valve spring periodically. The time depends on the use condition. Measure the thickness of the seat (M). If the seat is worn for 0.15 mm or more, replace the discharge valve, suction valve, and valve spring.

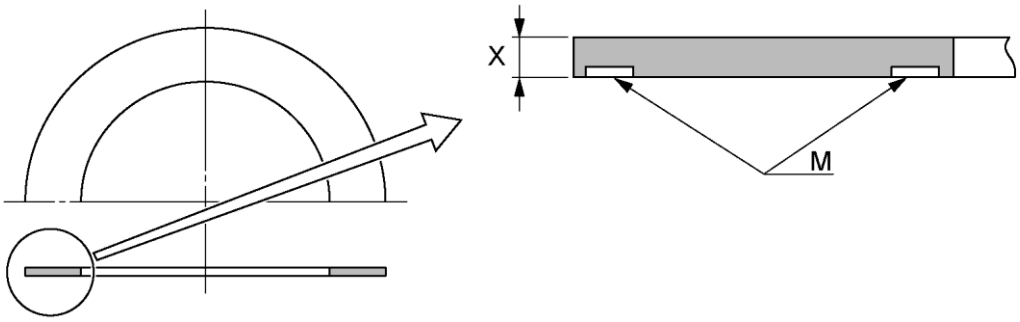

WBHE0700002a

Measurement Point		Standard Dimensions (mm)	Usage Limit (mm)
Thickness of the discharge plate valve and suction plate valve seat (M)	X	1.4	1.3

2. Inspect the surface of the inner/outer periphery of the discharge plate and suction plate for scratches. If there are scratches on the surface of the inner/outer periphery, replace them.

【POINT】

- Though wear of the discharge plate valve and suction plate valve seat are within the wear limit, if there are scratches on the surface of inner/outer periphery, fatigue crack on the valves may result.
- Although the wear amount is within the wear limit, replace it according to the recommended period of time.

3. Measure the height of the seats of valve plate and discharge valve seat.
If the seat height becomes 0.10 mm or less, replace the valve plate and the discharge valve seat.

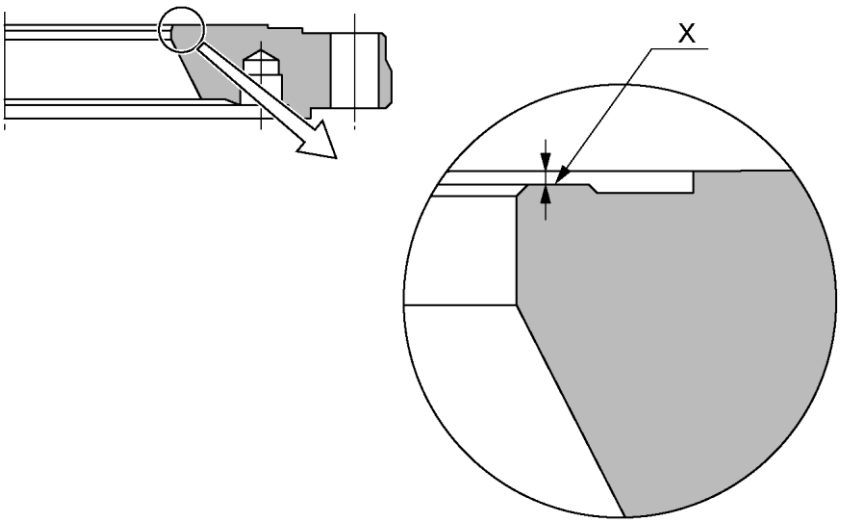

WBHE0700004a

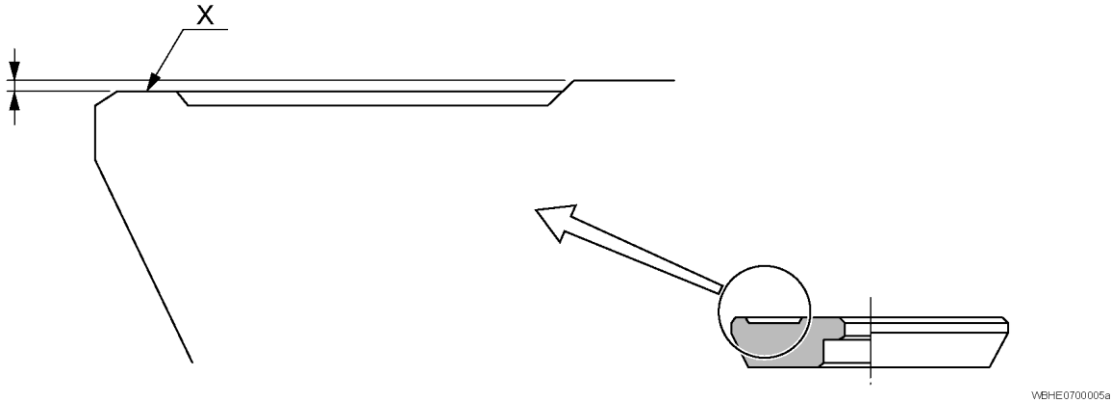

Measurement Point		Usage Limit (mm)
Height of the seat of valve plate and discharge valve seat	X	0.10

■ Mechanical Seal

1. Inspect the sliding surface of the mechanical seal (retaining ring) and the mechanical seal (rotating ring).
If the sliding surface is shiny and clean, the mechanical seal is in a good condition.
If the sliding surface is uneven, replace the mechanical seal as an assembly.

2. Inspect the sliding surface of the floating seat for chips and cracks.
If the sliding surface is chipped or cracked, replace the mechanical seal as an assembly.

3. Replace the O-ring when disassembling and inspecting.
Replace it according to the recommended period of time.

■ Piston/ Piston Pin/ Piston Ring

1. Inspect the piston for scratches.
If scratches are found, repair it by using a grinding stone.
If scratches are found in the outer surface, repair it by grinding the surface at a right angle of the sliding direction, using a grinding stone.
Measure the outer diameter of the piston skirt section.
If the outer diameter is below the usage limit, replace the piston.

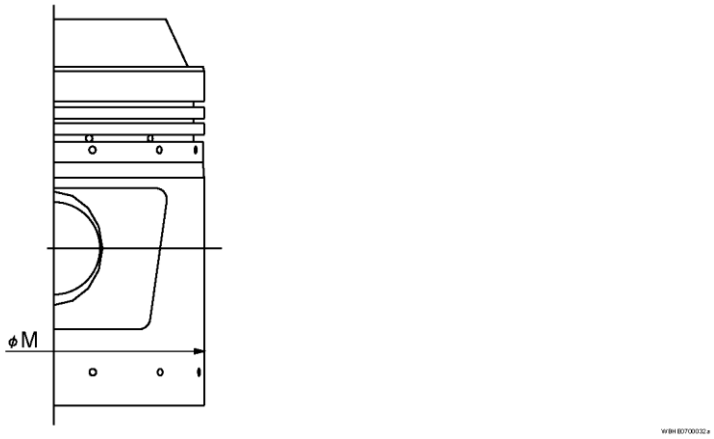

Measurement Point		Standard Dimensions (mm)	Usage Limit (mm)
Outer diamiter of the piston skirt section	M	129.78	129.58

2. Floating system is adopted for piston pin hole and the piston pin of the piston.
Measure the inner diameter of the piston pin hole.
If the inner diameter exceeds the usage limit, replace the piston.

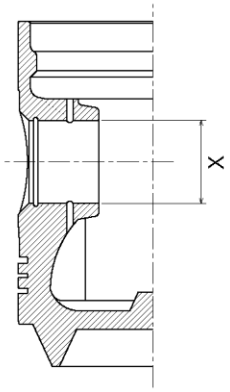

WBHE0700033a

Measurement Point	Standard Dimensions (mm)	Usage Limit (mm)
Inner diameter of the piston pin	40.0	40.07

3. Measure the outer diameter of the piston pin.
Measure three positions (M1, M2, and M3) as in the following figure. If the outer diameter of 1 position or more is below the usage limit, replace the piston pin.

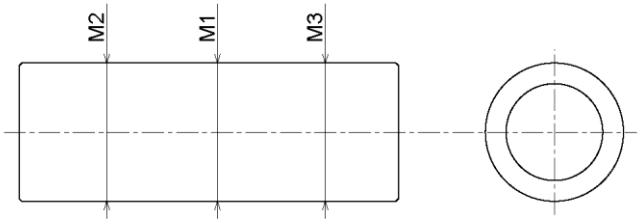

WBHE0700011a

Measurement Point	Standard Dimensions (mm)	Usage Limit (mm)
Outer diameter of the piston pin	40.0	39.90

4. Check the wear condition of the piston ring by measuring the joint interval (a).
Place the piston ring at a position of approx. 3 mm from the top of the cylinder sleeve and measure the joint interval (a).
If the joint interval (a) exceeds the usage limit, replace the piston ring.
Replace it according to the recommended period of time.

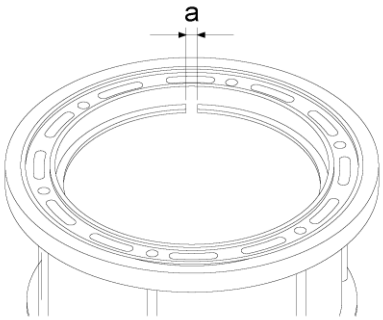

m0700008a

Ring Configuration	Measurement Point	Standard Dimensions (mm)	Usage Limit (mm)
Three rings	joint interval of the piston ring (1st, 2nd, and 3rd)	0.3 - 0.5	2.2

Ring Configuration	Measurement Point	Standard Dimensions (mm)	Usage Limit (mm)
Four rings	joint interval of the piston ring (1st, 2nd, 3rd, and 4th)	0.55 - 0.75	2.5

5. Measure the width of the piston ring groove of the piston.
If the width exceeds the usage limit, replace the piston.

Ring Configuration	Measurement Point		Standard Dimensions (mm)	Usage Limit (mm)
Three rings	Width of the piston ring groove of the piston	1st	2.5	2.6
		2nd	2.0	2.1
		3rd	3.0	3.1
Four rings	Width of the piston ring groove of the piston	1st	4.0	4.1
		2nd	4.0	4.1
		3rd	4.0	4.1
		4th	6.0	6.1

【POINT】

- Although the wear amount of the piston ring is within the wear limit, replace it according to the recommended period of time.

■ Oil Pump

If the oil pressure is low though the oil pressure adjustment valve is open and there is no clogging of the oil filter, there may be wear on the gears, metals, and shafts of the oil pump.

1. Remove the pump from the compressor, hold the shaft of the pump, and inspect the shaft for looseness by moving it to the axial direction or right angle of the axial direction.
If the shaft is loosened, replace the oil pump as an assembly.

■ Main Bearings (Main Bearing and Thrust Bearing)

1. Measure the inner diameter of the main bearings (main bearing and thrust bearing).
Measure two positions (Y and Y') as in the following figure.
If the inner diameter of 1 position or more is above the usage limit, replace the main bearings (main bearing and thrust bearing).

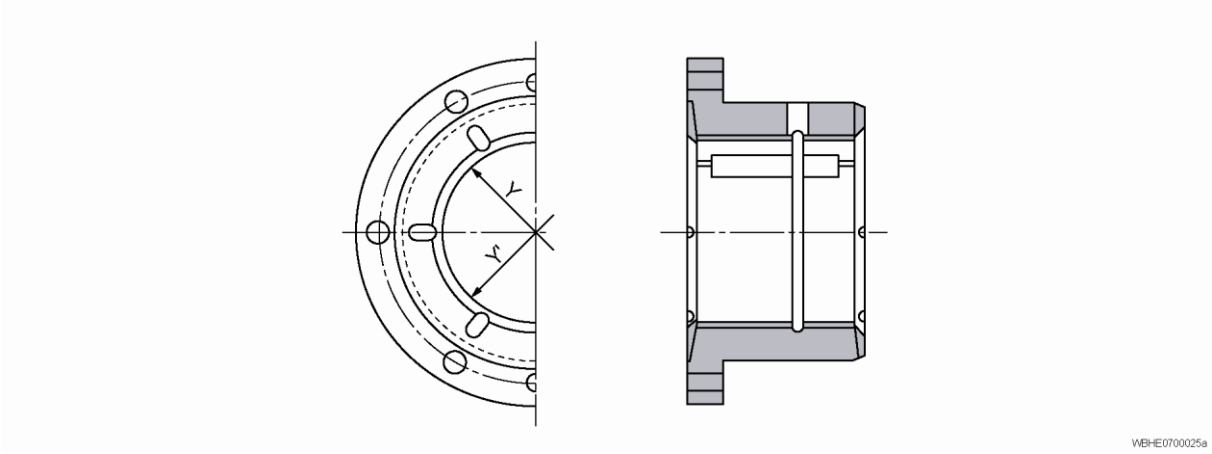

Measurement Point	Standard Dimensions (mm)	Usage Limit (mm)
Inner diameter of main bearing	92	92.18
Inner diameter of thrust bearing	112	112.18

■ Springs

1. Replace the discharge valve spring and suction valve spring periodically.

■ Gasket and O-ring

- Replace the gasket when disassembling and inspecting.
- The O-ring is deteriorated by the influence of refrigerant and oil.
  Replace it when disassembling and inspecting.
- The O-rings to be used are manufactured by us with specific compound.
  The gaskets are also manufactured by us with a specific model. Use the MAYEKAWA genuine parts without fail.

7.7 Standard Thrust Gap

■ Thrust Gap

1. Push the crankshaft towards the crankcase side, apply the tip of the dial gauge to the end of the crankshaft, and set the dial to 0.

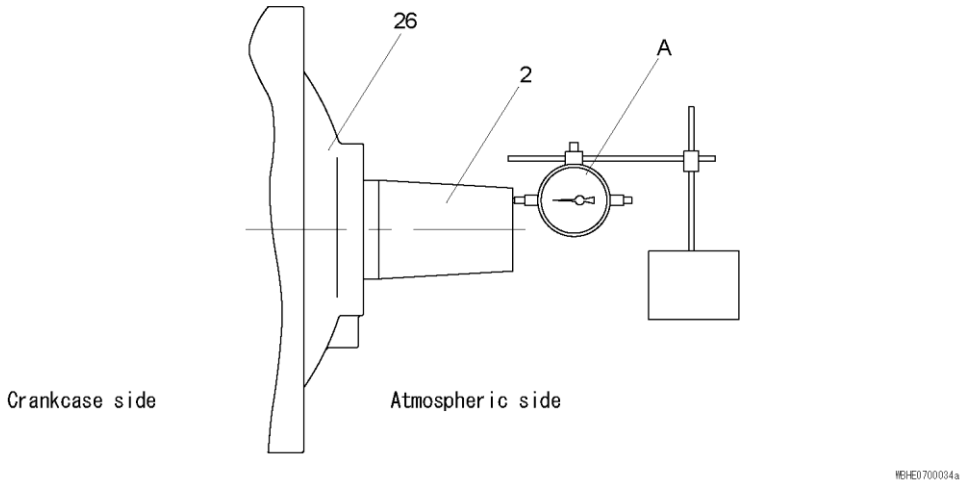

No.	Part Name
26	Cover plate
2	Crankshaft
A	Dial gauge

2. Pull the crankshaft towards the atmospheric side, read the scale of dial gauge and check the thrust gap. Make sure to check the thrust gap at the atmospheric pressure.

Measurement Point	Standard Dimensions (mm)	
Thrust gap	Standard type	0.46 - 0.84
	BB type	0.46 - 1.12

MYCOM MAYEKAWA MFG. CO., LTD.

Head office
3–14–15 BOTAN KOTO-KU, TOKYO 135-8482, JAPAN TEL: (81) 3-3642-8181
Moriya Plant
2000, TAYSUZAWA MORIYA–SHI, IBARAKI–PREF., 302–0118, JAPAN
TEL: (81) 297–48–1361

MAYEKAWA